CM Aprvd

ISSUED
2008/12/09

911147
Revision 0

ENGINEERING SERVICES FOR THE NEXT GENERATION NUCLEAR PLANT (NGNP) WITH HYDROGEN PRODUCTION

Test Plan for RPS, IPS and PCDIS

Prepared by General Atomics
For the Battelle Energy Alliance, LLC

Subcontract No. 00075309
Uniform Filing Code UFC:8201.3.1.2

GA Project 30302

GENERAL ATOMICS

GA 1485 (REV. 08/06E)

ISSUE/RELEASE SUMMARY

☐ R & D ☐ DV&S ☒ DESIGN ☐ T&E ☐ NA	APPVL LEVEL	DISC	QA LEVEL	SYS	DOC. TYPE	PROJECT	DOCUMENT NO.	REV
	5	I	I	N/A	TPL	30302	911147	0

TITLE:

Test Plan for RPS, IPS, and PCDIS

CM APPROVAL/ DATE	REV	PREPARED BY	APPROVAL(S) ENGINEERING	QA	PROJECT	REVISION DESCRIPTION/ W.O. NO.
ISSUED 4 DEC 0 9 2008	0	for D. Premmer	A. Shenoy	K. Partain	J. Saurwein	Initial Issue A30302-0130

CONTINUE ON GA FORM 1485-1

NEXT INDENTURED DOCUMENT(S)

N/A

COMPUTER PROGRAM PIN(S)

N/A

☐ GA PROPRIETARY INFORMATION

☒ NO GA PROPRIETARY INFORMATION

TABLE OF CONTENTS

LIST OF FIGURES

LIST OF TABLES

ACRONYMS AND ABBREVIATIONS

ALARA	As Low As Reasonably Achievable
ASC	Auxiliary Service Cask
BOP	Balance of Plant
CDS	Control Development Simulator
CFR	Code Federal Regulation
DDN	Design Data Need
DOE	Department of Energy
FSV	Fort St. Vrain
GT-MHR	Gas Turbine Modular Helium Reactor
HTGR	High Temperature Gas-cooled Reactor
INL	Idaho National Laboratory
IPS	Investment Protection System
NGNP	Next Generation Nuclear Plant
NHSS	Nuclear Heat Supply System
ORNL	Oak Ridge National Laboratory
PCBOP	Primary Circuit and Balance of Plant
PCDIS	Plant Control, Data, and Instrumentation System
PLC	Programmable Logic Controller
RPS	Reactor Protection System
SSC	System, Structure, or Component
TBD	To Be Determined
TRL	Technical Readiness Level

1 INTRODUCTION

1.1 Scope

This Test Plan outlines the testing and design information needed to advance a portion of the Reactor Control and Protection systems to a “hot startup” readiness level for operation of the Next Generation Nuclear Plant (NGNP). It addresses the technical issues that require developmental and confirmatory testing at each Technology Readiness Level (TRL).

The Reactor Protection System (RPS), Investment Protection System (IPS), and Plant Control, Data and Instrumentation System (PCDIS) are primary components of the Reactor Control and Protection systems. The development of these systems includes the design efforts necessary for determining and verifying the Plant Control Room layout, the operational and safety interfaces, remote shutdown facilities, plant-wide distribution of control and protection functions, and the overall plant control architecture for effective, reliable plant operation. The RPS, IPS and PCDIS equipment has been grouped as SSC-16 for the purpose of identifying technology development required for the NGNP.

SSC-16 includes development of the reactor control and protection algorithms, which require verification at preliminary and latter stages of the design. Verification testing of the internal software provided by this equipment will require particular testing capabilities, including facilities for interactive simulation of plant functions controlled by this equipment. After installation, this equipment operates the actual NGNP processes.

Since it is quite likely that the plant control architecture and the operator interface will employ modern digital hardware and software, SSC-16 also includes the necessary testing and qualification to assure reliability and safety using this type of equipment in the NGNP. This test plan presumes that the NGNP will precede other nuclear plants which will undoubtedly include similar equipment.

1.2 Purpose

The purpose of this test plan is to estimate the necessary testing to assure hot-startup readiness for the RPS, IPS and PCDIS portions of the Reactor Control and Protection systems. Design Data Needs (DDNs) from earlier design efforts, and the related design issues, are the basis used here to approximate the instrumentation technology advancement process. It should be noted that work to develop a similar control and protection configuration for the New Production Reactor (NPR) program was done in the early 90’s at General Atomics. This work established the control architecture for the NPR plant using modern digital hardware and software. Conceptual designs were completed for NPR protection and control systems.

1.3 Applicable Documents

Table 1. Applicable Documents

Document Number	Title
DOE-HTGR-86025 Rev 4	Design Data Needs Modular High-Temperature Gas-Cooled Reactor
CEGA-002712	NP-MHTGR Engineering Development Plan
CEGA-002950	Reactor Protection System Design Status
CEGA-000008	Reactor Protection System SSD
CEGA-000010	Investment Protection System SSD
CEGA-000011	Plant Control System SSD
CEGA-000181	Control Room Trade Study
CEGA-002886	Control Room Design Status
CEGA-000307	Role Of The Operator

2 TRL 4 TO 5 — EQUIPMENT TESTING AT COMPONENT LEVEL

The NPR work mentioned above and other MHR control development efforts justify an initial TRL rating of 4 because the NPR project completed trade-off studies to define top level requirements for control room layout, plant control architecture, utilization of digital equipment and software for operator interactions, capability for multi-function plant control and safety, etc.

Testing to advance the TRL rating from 4 to 5 will require specific areas of design progress. Determination of testing needed to assure reliability, availability, maintainability, etc. for this type of equipment will need information provided by control system vendors (Foxboro, Honeywell, etc.) to establish a current database for the type of equipment which will be used in the control and protection systems.

The steps that are likely to precede any level of testing or test planning are as follows:

- Complete the basic concept design for the NHSS. Determine the basic control architecture for the NPR plant using modern digital hardware and software. Complete the conceptual design functions of the protection and control systems.
- Define top level requirements for control room layout, plant control architecture, estimates for total utilization of digital equipment and software, operator interactions, requirements for plant control and safety, etc. This work will be the basis for the NGNP conceptual design.
- During the initial phase of the NGNP conceptual design, develop preliminary plant control algorithms, provide transient calculations to demonstrate the preliminary control/protection design specifically for NGNP multi-function plant operation, etc. This requires development of a real-time simulator, which eventually supports later testing efforts. However, the simulator purpose at this phase is to develop the plant control and protection algorithms and the preliminary operator interaction and control methods. An advanced version of the simulator will be developed for acceptance testing of RPS, IPS and PCDIS equipment and software, and will be used at a higher TRL to test the as-built, interconnected Reactor Control and Protection systems equipment.

After these initial design phases are under way, testing to confirm reliability assumptions provided by digital control equipment hardware and software manufacturers can be planned.

2.1 Testing Considerations

It is assumed that vendor-supplied safety, protection, and control equipment will be subjected to experimental-scale testing. Several control system equipment vendors should be selected for the component level testing. The following suggestions are offered for equipment investigation, test planning, and testing:

- Obtain available control equipment supplier data applicable to the control and protection digital equipment. Verify supplier data to extent possible by analytical or other non-testing means. This will require evaluation of critical aspects of interactive plant operation, control automation strategy, information recovery strategy, etc. Include requirements for operability and safety from NGNP participants in other design areas as well to confirm the overall conceptual design features of the operator displays.
- Provide requirements for operating environment, speed, accuracy, size, reliability, availability, and general features of various equipment. Obtain necessary plant control interface requirements in other NGNP design areas needed by the Reactor Control and Protection systems (e.g. for operation of the control rods to control electric production, circulator motor speed control to manage reactor and other flow rates, etc.). Develop a preliminary list of plant control and protection specifications for the NGNP design.
- Contact vendors to obtain available data, based on preliminary specifications. Determine equipment failover methods, signal noise tolerance, etc. Compare to reliability and availability requirements. Resolve design issues which do not require specific component testing, using analysis or test data from qualified similar applications. Other nuclear plant applications may be applicable.
- Determine issues which require testing to obtain new data. Obtain vendor suggestions with regard to verification of previous requirements through extension of vendor test results and plan the testing activities.
- Using representative equipment, operating and placement configurations, accelerated life testing, etc., test digital equipment robustness, susceptibility to common-mode failure, etc. considering single and multiple failure cases to confirm the reliability design for RPS, IPS and PCDIS equipment, under scenarios of operation, maintenance, etc. If available, provide experimental scale verification of the 2-out-of-4 redundancy scheme incorporated in design of safety and protection equipment. (Note: the redundancy scheme will be verified at a higher technical rating as well.)
- Combine test results with conceptual design verification of electric power availability, and other BOP functions critical to Reactor Control and Protection. Determine by analytical or other means, equipment modifications required to provide NGNP design features. Complete essential design modifications and interact with vendors to verify feasibility of NGNP specific design requirements.
- Document remaining design issues, and incorporate into planning for subsystem-level testing.
- Update conceptual design Reactor Control and Protection systems analysis results to confirm preliminary design readiness. Obtain preliminary review of licensability, and document any associated issues.
- Document basis for TRL 5 rating for safety-related digital computer equipment and non-safety protection and control equipment.

2.2 Test Configuration and Setup

Extension of manufacturer's data might continue at the manufacturers testing facilities. Depending on the design, some data acquisition and control equipment for primary circuit instrumentation may require testing in facilities which can evaluate the radiation effects. This is not considered likely, and manufacturers may supply this information for nuclear customers, as well. All the equipment requires handling operations for maintenance and inspection, as well.

Tests can be done at several nuclear testing facilities such as the Idaho National Laboratory, Oak Ridge National Laboratory, etc.

Failure modes will also be determined at the component level. Failure modes and effects are not likely to be key concerns for later testing activities, if these are well understood at the component level. The need for accelerated life testing will have to be determined after completion of all the above activities.

Testing completed at any facility equipped for component development should provide the equipment, materials, and features described below:

- Calibrated Power Supply and Calibrated Electronic Testers for testing electronic components. These should be available with their test articles.
- Instrumentation calibration standards applied to instrumentation for which data is being obtained. These should be available from manufacturers, but extended as necessary to accommodate the NGNP design requirements.
- Data available from manufacturers for operation of the device, enclosure of the device, and electrical power supply required, signal cables, etc. should be provided. Data provided by manufacturers should be verified to the extent possible after being collected before it is included in the data base.
- Manufacturers' Verification Certificates.
- Test data available from development of digital equipment specifications. For example, measurement equipment, bandwidth capability, calibration accuracy, etc. Also test environment, test configurations, observed parameters, etc.
- Quality assurance documentation providing requirements for conducting experimental or validation testing of non-safety and safety-related components.

The following documentation may be applicable for facilities used in testing:

- 10 CFR 835, Occupational Radiation Protections.
- 29 CFR 1910, Occupational Safety and Health Standards.
- 40 CFR 1502, Environment Impact Act.

- DOE O 420.1A, Facility Safety

The necessary test conditions will be established during the component testing phase. However, it is expected that the testing can be done at the manufacturer's specified conditions. Later, specific testing may be done to verify particular environmental conditions for placement of some of the control and protection equipment.

Additional references applicable to development of this equipment are provided below:

A. American National Standards Institute*

1 ANSI C37.90, Relays and Relay Systems Associated with Electric Power Apparatus

B. Instrument Society of America*

1. ISA-S5.1, Instrumentation Symbols and Identification

2. ISA-S5.3, Graphic Symbols for Distributed Control/Shared Display Instrumentation Logic, and Computer Systems

3. ISA-S5.5, Graphic Symbols for Process Displays

C. National Fire Protection Associations, Inc.*

4. NFPA-85A, Prevention of Explosions in Fuel Oil Fired and Natural Gas Fired Boiler-Furnaces

D. Scientific Apparatus Maker's Association*

1. SAMA PMC 22.1, Functional Diagramming of Instrument and Control Systems

2. SAMA PMC 33.1, Electromagnetic Susceptibility of Process Control Instrumentation

E. National Electrical Manufactures Association

1. ANSI/NEMA ICS 6, Enclosures for Industrial Controls and Systems

F. American Society of Mechanical Engineers

1. ASME NQA-1-1989, Quality Assurance Program Requirements for Nuclear Facilities, including NQA-1a-1989 Addenda.

2. ASME NQA-2-1989, Quality Assurance Requirements for Nuclear Facilities Applications, including NQA-2a-1990 Addenda.

G. Institute of Electronic and Electrical Engineers

1. IEEE 1023-1988, Application of Human Factors to all Equipment

2. IEEE 600-1983, Qualification Standards

3. IEEE 665-1987, Grounding

2.3 Test Deliverables

All test equipment and instrumentation data should be reviewed, calibrated, with procedure documentation etc. provided beforehand. All operational discrepancies should be included in the Test Report, which should include, as a minimum:

- Detailed discussion of operation
- Equipment employed
- Equipment calibration verification
- Detailed test procedures
- Original test data
- Summarized and reduced test data

A detailed discussion of test results, observations, and calculations that were completed throughout the course of testing, would also be included.

The final report should be available prior to completion of conceptual design.

2.4 Cost and Schedule

Tests will be performed during the last year of the conceptual design phase.

Table 2. Costs Estimates for RPS, IPS and PCDIS Component Testing

Test Contributor	Test Category	Test Costs (000's)
GA	Component Evaluation, Test Planning, and Monitoring	$600
Vendor(s)	Test Articles	$1,300
Facility(s)	Component Test Performance	$200
	Total:	$2,100

3 TRL 5 TO 6 — PILOT-SCALE TESTING

TRL 5 is achieved upon completion of the activities discussed in Section 2. These activities involved component testing of digital equipment associated with the RPS, IPS and PCDIS. These testing and analytical assessments supporting the NGNP design application provided the basis to start preliminary design activities.

To advance to TRL 6, additional testing must be completed to confirm data and control signal transfer rates, and other aspects of the design. Preliminary estimates of plant-total instrumentation and control equipment from each of the design areas will be needed to establish test requirements concerning data transfer volume, rate, storage capacity, etc. Vendor supplied equipment will be used, as before. Testing will confirm data-highway communication capacity, considering a data-highway hierarchy. Figure 1 shows a possible structure of the overall data highway networking for an entire plant. The data highway networking design is a major consideration that must be included in the Reactor Control and Protection systems development. A key feature, shown in Figure 1, is the separation of safety-related and non-safety portions of the network. A representative data highway network for NGNP, with supporting interfaces, should be developed, configured, and tested. Note that many necessary features such as back-up networking, command-data tracking computers for fail-over, etc. are not shown in Figure 1.

Testing to advance the TRL from 5 to 6 will require specific design areas of progress. These tests may involve other vendors or the original vendors (Foxboro, Honeywell, etc.).

The steps that are likely to precede any level of test planning or testing are as follows:

- Update the conceptual design. Include the results of the digital hardware and software development testing performed to advance the TRL from 4 to 5. Complete the conceptual design analysis of the protection and control system reliability.
- Update the plant control and protection algorithms, and provide transient calculations to demonstrate plant operation, response of protection systems to abnormal events, etc. The real-time simulator, used previously in the design, will require some new development to interface with RPS, IPS and PCDIS hardware. However, the simulator's main purpose at this phase is still to develop the plant control and protection algorithms and operator interface.
- Develop pilot scale facilities for RPS, IPS, and PCDIS plant-distributed control and instrumentation equipment testing, using vendor supplied equipment. Determination of data-highway communication capacity, communication failure modes, etc for the integrated RPS, IPS, and PCDIS systems will be a primary function of the test facilities.

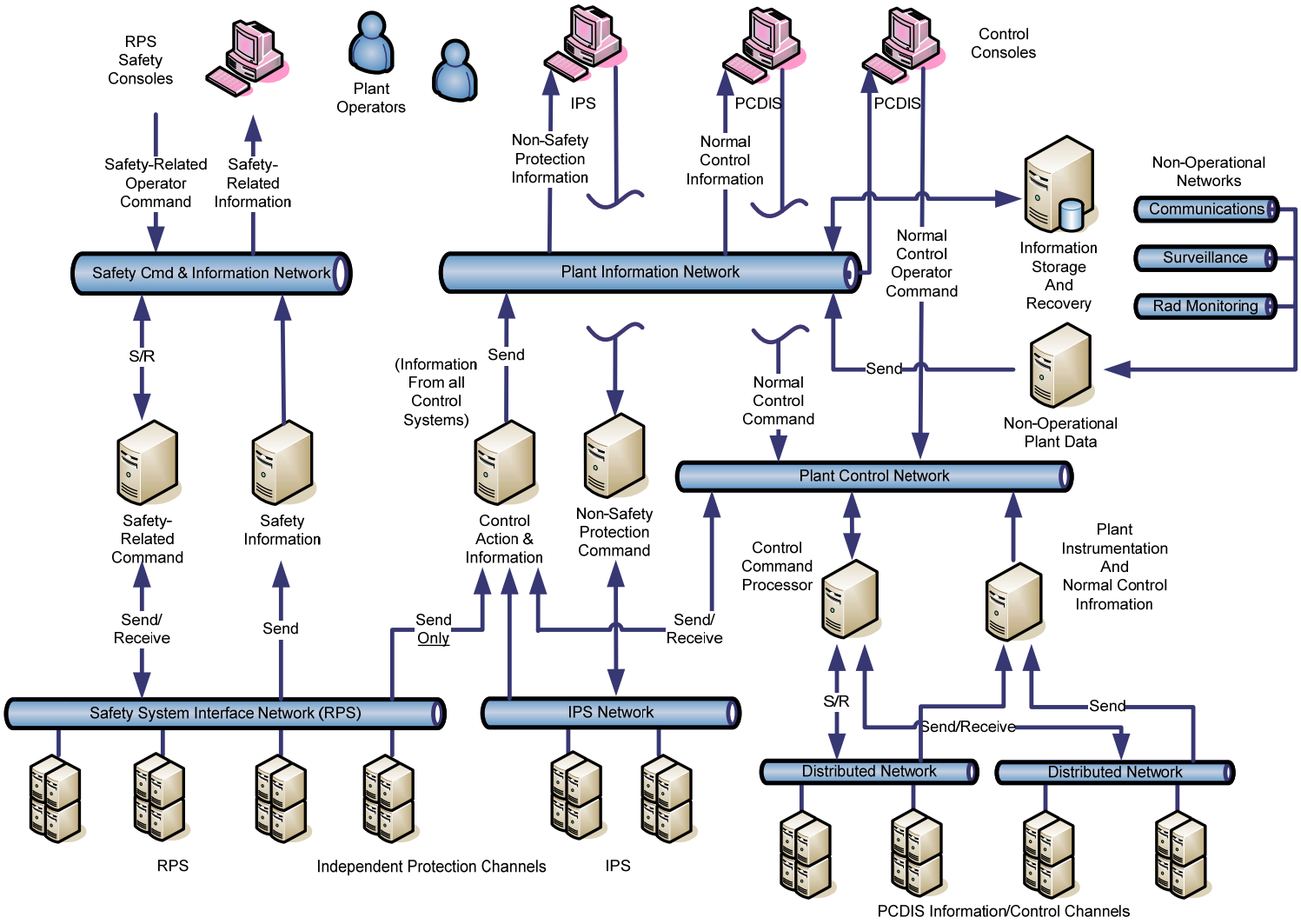

Figure 1. PCDIS Data Highway Network Configuration

3.1 Testing Considerations

Testing requirements at this level address operating lifetime, on-line maintenance access, and other issues not available from prospective equipment vendors. Testing should also verify channel separation, isolation from non-safety equipment, failed-channel operation, etc. for RPS and IPS to obtain preliminary confirmation of licensability. This confirmation is necessary to issue design procurement specifications for vendor supplied equipment.

It is anticipated that the pilot-scale testing will be completed in two stages – one stage to confirm design features which are necessary to obtain information for procurement of testable RPS, IPS and PCDIS subsystems and another stage to verify subsystem performance.

Therefore in addition to criteria mentioned above, the following also apply:

- Testing to provide a database for specific information such as communication signal noise environment, temperature/humidity/pressure environment, motion/vibration environment, electrical quality, cooling quality, etc. Prior start of testing, all available information applicable to RPS, IPS and PCDIS systems development should be obtained in order to assure that all testing is to provide information specifically needed in these NGNP design areas.
- A resulting test plan to verify pilot-scale equipment to be delivered from vendors (probably two) is completed at this stage. Equipment tests to verify storage, formatting, and on-line retrieval of stored data for use in trend displays, tech spec information displays, safety-console information displays, and other critical operator information displays, should be included. The objective is to verify communications, robustness, maintainability, and other issues that will lead to the final design specifications.

The test results, resolution of issues, and documentation of overall results of pilot-scale equipment testing confirms final design readiness. Update of reactor control and protection analysis results is also necessary to confirm final design readiness.

3.2 Test Configuration and Setup

Where necessary, provide separate pilot-scale test configurations for RPS/IPS protection systems and PCDIS control systems to separate safety licensing issues during this testing. The test configuration must be determined during the preliminary phase of final design, based on information derived during that phase of the design effort. The setup, including data base, procedural documentation, testing equipment, etc., will probably be very similar to the test facilities used for component testing. It would be advisable to consider the possibilities for expansion of the facilities during the component development phase of testing. The expected

procedure for determining the tests to be performed, the issues to be resolved, the data to be confirmed, etc. is listed briefly below:

- Complete design efforts, mentioned in Section 3.1.
- Provide subsystem and assembly views, I&C diagrams, electrical specs, etc. Complete supporting analysis to determine operating conditions for each communication, control/data-acquisition subsystems.
- Document the design issues. Coordinate with interfacing design areas such as BOP to verify necessary interrelated subsystem development efforts.
- Resolve design issues which do not require specific subsystem testing, using analysis or test data from qualified similar applications. For example, it is expected that issues arising in the BOP instrumentation can be resolved by review of similar instrumentation that has been used extensively in the light water reactor industry.
- List all design issues which do require subsystem testing and determine tests required.
- Prepare test facilities for Reactor Control and Protection equipment. Use representative versions of the final design procured from vendors. Facilities should address issues such as communication signal noise environment, temperature/humidity/pressure environment, motion/vibration environment, electrical quality, cooling quality, etc. This phase of testing requires procurement of checkout interfaces for development simulator.

Representative equipment tests include the following:

- Equipment tests to verify storage, formatting, and on-line retrieval of stored data for use in trend displays, tech spec information displays, safety-console information displays, and other critical operator information displays.
- Tests to verify the reliability of Reactor Control and Protection equipment (distributed micro-processors) operating in locations outside the control room.
- Tests to verify communication signal speed, integrity, reliability, etc. under conditions representing a distributed plant configuration.

It is expected that the test facilities identified above, with minor modifications, can be used to complete the subsystem testing. Where necessary, separate pilot-scale test configurations for RPS/IPS protection systems and PCDIS control systems can be provided to separate safety licensing issues from non-safety testing. For example, the channel separation strategy devised in the NPR program, and shown in Figure 2, will probably be used in the NGNP design. The associated equipment will require test data specific to licensing of the NGNP safety system.

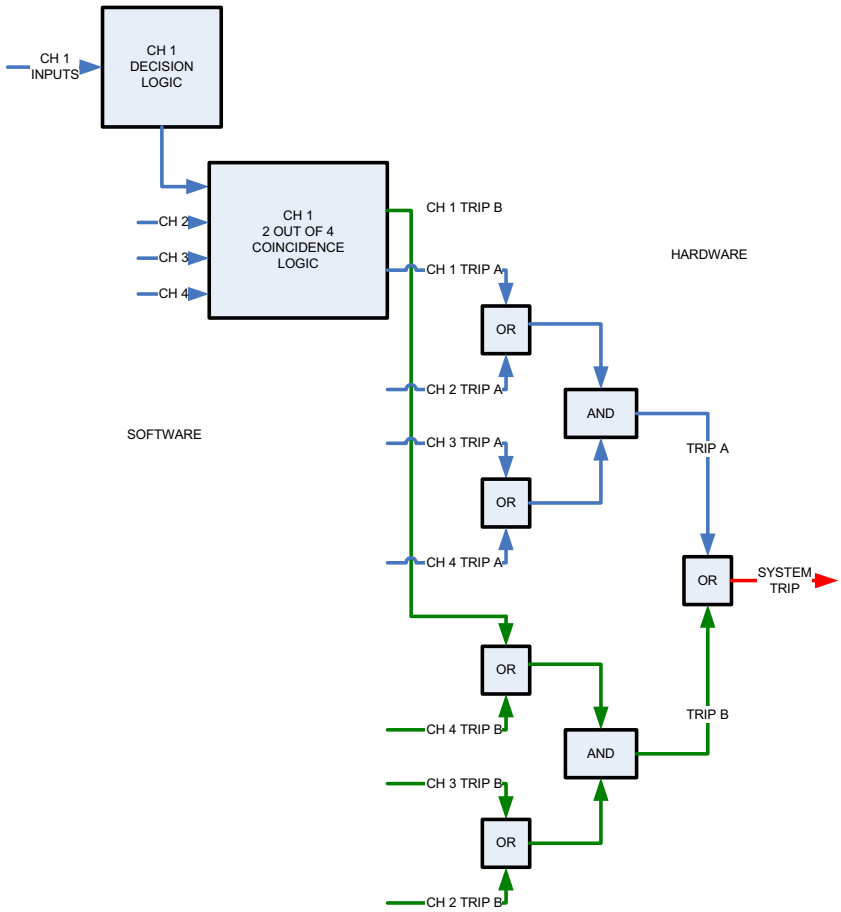

Figure 2. Typical 2-out-of-4 Protection System Trip Logic

The logic shown in Figure 2 was used in previous MHR designs, including the GT-MHR design. Configuration of the 2-out-of-4 protection logic for the RPS and IPS hardware to provide nuclear safety would be needed to verify channel separation, isolation from non-safety equipment, failed-channel operation, etc. Such testing would establish preliminary confirmation of licensability, thus reducing the technical risk in issuing the final design procurement specifications for vendor supplied equipment. The GT-MHR 2-out-of-4 logic shown in Figure 2 is explained below:

The Decision Logic detects abnormal conditions during a design basis event and compares these to preset levels at which protective action must begin. The redundant Decision Logic processors compare data inputs against predetermined trip set points to ascertain if a trip situation has occurred and, if so, a trip request is sent to the coincidence portion of the logic. This Coincidence Logic is also duplicated in four separate channels, but each channel receives an input from each decision logic channel, which compares trip requests from all channels to

determine if two or more “like trips” have been requested by the decision logic. When the coincidence logic confirms that two “like trips” have occurred, A and B CHANNEL TRIP’S will be sent through the 2-out-of-4 logic. Then, either TRIP A or TRIP B being TRUE will cause a TRUE output for the particular SYSTEM TRIP function. End-action hardware associated with each protection function performs the action required by each SYSTEM TRIP output.

3.3 Test Deliverables

All test equipment and instrumentation data should be processed, reviewed, and documented. Any test equipment deficiencies should be corrected and documented along with test results. All operational discrepancies during testing should be included. Retesting to resolve discrepancies should be described in detail. The Test Report should include as a minimum:

- Detailed discussion of the operation
- Equipment employed
- Equipment calibration verification
- Detailed test procedures
- Original test data
- Summarized and reduced test data

The subsystem pilot-scale testing will be completed as determined above. Design adjustment and repeat-testing to resolve issues that arise during testing should be clearly documented. Recommendations for pre-delivery and pre-installation system acceptance testing of Reactor Control and Protection systems should be provided during this phase of the technical development process.

A detailed report describing test results, observations, and calculations that were completed throughout the course of testing should be issued within two months after completion of the physical testing.

3.4 Cost and Schedule

Subsystem tests will be performed approximately in the middle of the final design schedule. It is estimated that these testing activities will occur the period of 30 to 42 months after starting the final design.

Table 3. Costs Estimates for Pilot Scale Testing

Test Contributor	Test Category	Test Costs (000's)
GA	Subsystem Development and Test Planning	$300
Vendor	Test Configuration Interface (Simulator)	$800
Vendor(s)	Supply Test Subsystems	$3,100
Facility(s)	Perform Instrumentation Pilot Scale Testing	$1,700
	Total:	$5,900

4 TRL 6 TO TRL 7 — PRE-INSTALLATION TESTING

The RPS, IPS and PCDIS systems final design is completed in the TRL 6 to TRL 7 step, plus demonstration of installation readiness requires further testing to advance from TRL 6 to TRL 7. The major categories of testing are the following:

- System acceptance testing, at the factory and on-site
- Integrated system operability testing
- Seismic testing

The final design and test planning activities prior to installation are as follows:

- Complete final design. Issue final P&ID drawings. Assure updated analysis is provided to define accuracy, reliability, maintainability, etc. Prepare all final transient calculations for use in acceptance testing.
- Monitor vendor acceptance testing.
- Complete seismic testing to assure compliance with SSE and OBE operational requirements.
- Document all testing activities to confirm qualification of safety-related protection instrumentation.
- Deliver systems and repeat vendor acceptance tests on-site to validate operation.
- Verify installation capability. Integrated system operability tests to verify power-up and installation readiness will utilize available NGNP facilities, including electric power equipment.
- Provide documentation for qualification of safety-related protection equipment.

4.1 Testing Considerations

Software validation acceptance test procedures must be developed and completed, and engineering-scale testing must be performed to validate the as-built Reactor Control and Protection systems hardware and software, and to confirm RPS, IPS, and PCDIS installation readiness.

Testing requirements and test evaluation criteria will be developed during final design and will be based on control and protection system engineering development. These design efforts will establish a reference base of transient response functions that will be repeated and compared to validate the equipment and software during the acceptance test checkout phase. Figures 3 through 5, below, indicate the type of transient events (from the NPR design) which will be used to validate the equipment.

1. Event: Main Loop Trip (DBE 2.1)
   Protection for: Temperature damage to steam generator and core internals

2.(*) Event: Small Steam Generator Tube Leak (DBE 2.13)
   Protection for: Oxidation of core components, Overpressure of vessel system

3. Event: SCS Heat Exchanger Tube Leak (DBE 2.14)
   Protection for: Primary coolant leak to SCS water loop. Oxidation of core components

4. Event: Moderate Steam Generator Tube Leak (2.18)
   Protection for: Oxidation of core components, Overpressure of vessel system

5. Event: Small Steam Generator Tube Leak with Moisture Monitor Failure (DBE 3.2)
   Protection for: Oxidation of core components, Overpressure of vessel system

Figure 3. Typical RPS IPS Acceptance Test Transients

Transient No. 20A:	Power ramp from 100 percent to 40 percent at 5 percent per minute with rate change roll off beginning at 60 percent power.
Transient No. 21A:	Power ramp from 40 percent to 100 percent at 5 percent per minute with rate change roll off beginning at 60% power.
Transient No. 39: (Design Basis Event 1.7, Ref. 1-7)	Power ramp from 100 percent to 40 percent at 0.5 percent per minute.
Transient No. 40: (Design Basis Event 1.5, Ref. 1-7)	Power ramp from 40 percent to 100 percent at 0.5 percent per minute.

Figure 4. Typical PCDIS Electric Generating Function Tests

Transient No. 22:	Main steam temperature cooldown from 1005° to 675°F at 2°F per minute at constant 40% feedwater flow (automated shutdown sequence No. 1).
Transient No. 24:	Transfer to startup/shutdown (SUSD) tank at 675°F main steam temperature (automated shutdown sequence No. 2).
Transient No. 25:	Reduce main steam pressure with SUSD tank on line (automated shutdown sequence No. 3).
Transient No. 26:	Reactor trip from low power with HTS cool-down (automated shutdown sequence No. 4).
Transient No. 28:	Raise power and pressurize SUSD tank (automated startup sequence No. 2).
Transient No. 29:	Transfer steam flow to main steam line, drop SUSD tank off line (automated startup sequence No. 3).
Transient No. 30:	Warm main steam temperature from 675°F to 1005°F at constant 40 percent feedwater flow (automated sta.tup sequence No. 4).

Figure 5. Typical PCDIS BOP Transient Tests

Seismic testing will also check a few representative functions to assure operability during SSE and OBE level events.

4.2 Test Configuration and Set-up

The pre-installation test configuration will require final development of the checkout simulator functions. As mentioned above this equipment is based on earlier design and testing efforts.

Acceptance of the RPS, IPS and PCDIS equipment for delivery and installation will depend on completion of the following activities.

- Completion of final design engineering.
- Management and support of IPS, RPS, and PCDIS equipment procurement activities.
- Development of acceptance testing requirements. The Acceptance Testing will be done twice. The first phase will be completed at the fabrication facility. It is expected that system revisions will occur during this phase. The testing procedure must assure that all revisions are retested, with appropriate documentation procedures. The Acceptance Test Simulator may be a copy of the Control Development Simulator (CDS). The simulator for testing will be a portable version.
- Complete pre-delivery acceptance tests and provide NHSS equipment change information to engineering, with modifications of the as-built drawings.

After delivery of the RPS, IPS, and PCDIS, post-delivery acceptance testing to validate as-built Reactor Control and Protection systems software and equipment will be completed. Preparation of test facilities that will be used at the NGNP should follow the same procedures as were followed at the fabrication facility. If equipment adjustments are necessary during testing, repeat testing after adjustments are completed. Assure that all levels of Quality Assurance are repeated in the testing process and document results to confirm achievement of TRL 7. Provide recommendations for after-installation-testing.

4.2.1 Acceptance Testing

The procedure for performing these tests is described above. Test data recording equipment, available from the engineering-scale PCDIS portion of Reactor Control and Protection systems equipment, should be used for acquisition of data from these tests whenever possible.

4.2.2 Integrated System Operability Testing

In addition to the acceptance testing at NGNP, end-to-end checks of the instrumentation and equipment will be performed with the instrumentation connected. Checkout of electric power wiring must verify cable harnesses, cable tray attachments, proper color coding, etc for each of these systems. This also includes verification of proper cable separation procedures for the reliability and safety-related design requirements of the equipment.

4.2.3 Seismic Testing

Seismic testing of Reactor Control and Protection systems is required to achieve a TRL 7 rating. These tests will be accomplished in a nuclear qualified facility. Special test structures to attach equipment and produce as-installed seismic effects, or amplification of the seismic effects to represent the as-installed effects, will be required.

Operability at Safe Shutdown Earthquake (SSE) seismic levels must be demonstrated for safety-related equipment. The SSE magnitude is twice the Operational Basis Earthquake (OBE) magnitude, but the OBE requirement applies to all equipment, and requires that all equipment needed to operate the reactor must continue to operate. This would apply to all of the SSC-16 equipment. SSE seismic level testing would be a key portion of the RPS equipment testing. Therefore, temporary acceptance test simulator equipment to seismic test facilities will be necessary. Test documentation from seismic testing must be provided to support SSE and OBE qualification of the equipment.

Wyle Labs is a provider of seismic testing for nuclear plants and has extensive facilities for this type of testing. The seismic tests will probably be done at these facilities. The following link provides in formation about Wyle Labs:

http://www.wylelabs.com/services/nuclearservices/seismicandequipmentqualificationtestservices.html

4.3 Test Deliverables

All testing equipment and instrumentation data should be processed, reviewed, and documented as before. Any operational discrepancies should be included and the process of retesting to resolve discrepancies should be described in detail. The Test Report should include as a minimum:

- Detailed discussion of the operation
- Equipment employed
- Equipment calibration verification
- Detailed test procedures
- Original test data
- Summarized and reduced test data

NRC acceptance of testing results is necessary at this TRL rating level. It may not be necessary to seismically test all equipment, since there are many duplications. If this is the case a clear method of validating untested equipment must be established beforehand. Test planning should also determine methods to validate the equipment after installation, and should include documentation of remaining issues for that phase of testing.

The final report should be available within one month after completion of the physical testing.

4.4 Cost and Schedule

These tests will be performed approximately at the end of the final design schedule. It is estimated that the testing activities will occur during the period of 42 to 84 months after starting the final design.

Table 4. Costs Estimates for Reactor Control Equipment Pre-Installation Testing

Test Contributor	Test Category	Test Costs (000's)
GA	Test Planning, Monitoring and Support	$1,600
Vendor(s)	Test Preparation and Performance	$2,000
Facility	Test Preparation and Performance	$100
Seismic	Test Performance	$3,000
	Total:	$6,700

5 TRL 7 TO TRL 8 — HOT STARTUP READINESS TESTING

Testing of the installed RPS, IPS and PCDIS systems will be needed to confirm hot startup readiness. Since all testing at this stage of the TRL advancement process involves operation of the equipment from the control room, the Plant Control, Data and Instrumentation System (PCDIS) and monitoring functions of the RPS and IPS will be automatically tested. However, testing objectives specifically for SSC-16 equipment testing are to be included in the Hot Startup Readiness program.

Testing objectives to advance from TRL 7 to TRL 8 should include the following:

- Verification of signal communications, signal scaling and continuity, power-up and power-down features, fire-suppression and other equipment protection features, power failure recovery features, etc. This testing also requires QA check-off of procedures included in operator support documentation, provided with the installed equipment and needed in operating hardware and software features. Complete tests of NHSS, BOP, etc. equipment (dependent on Reactor Control and Protection systems) as allowed within limits of prior-to-hot-startup operational capabilities.
- Check vessel pressurization equipment and pressurize vessel to (TBD). Operate circulators, and verify helium flow control capabilities. These tests are required by other portions of the Reactor Control and Protection systems, but information should be gathered for confirmation of SSC-16 as well. This includes completion of all operation and instrumentation tests, including the associated operator information procedures, control room supervisory procedures, and information storage verification tests; remote shutdown facility tests; BOP and Hydrogen Plant control system checks; safety and protection trip-setpoint tests; maintenance tests; etc. to verify hot-startup readiness.
- Update the SSC-16 status. Include off-line analysis, from the simulator, comparing expected control and protection test results and actual results, to confirm hot startup readiness. Verify regulatory acceptance of Reactor Control and Protection systems hot startup readiness at TRL 8.
- Repeat testing for issues requiring resolution and assure maintenance of all QA documentation.
- Document SSC-16 final status for hot startup readiness.

5.1 Testing Considerations

To advance to TRL 8, the Plant Control and Protection systems must be installed and reconnected (from validation test configurations to operational configurations), using moderate test procedures to validate this process. As mentioned above, flow and equipment operation testing as required by other systems and by other Reactor Control and Protection SSCs will be required to advance to TRL 8. Therefore, other systems must be installed and connected to test

the RPS, IPS and PCDIS systems. Most testing, prior to operational testing indicated above, will cover configuration changes incurred to interconnect the instrumentation, digital equipment, power supplies etc. from the simulator configuration used in the previous level of testing. These tests should be of a minor nature, but all proper documentation should be completed in the process.

5.2 Test Configuration and Setup

The test configurations are the as-installed systems. No facilities outside of NGNP are needed for these tests. Considerations are listed below:

- Preparation of detailed test procedures and goals to be accomplished will be needed to perform the pre-hot startup testing. Testing associated specifically with the RPS, IPS, and PCDIS should be identified and documented for this part of the integrated system testing.
- The circulators will be operated to test control functions. Helium flow rate instrumentation will also be verified in the process, including range of operation, speed vs. flow correlation with data from circulator development testing, etc. From these tests it is also possible to re-verify flow control functions by comparison with pre-calculated transient results. This level of PCDIS checkout should also be included in preparing for hot startup.
- BOP electric-plant instrumentation will be monitored during BOP pre-hot startup readiness testing and it will be possible to verify available temperature, pressure, flow rate, etc. measurements from the control room. All operator information, monitoring alarms and displays, etc. should be compared with pre-installation testing results to confirm hot startup readiness.

Documentation supporting this phase of RPS, IPS and PCDIS testing should be provided to confirm achievement of TRL 8.

5.3 Test Deliverables

The Test Report should include as a minimum:

- Detailed discussion of the operation
- Equipment employed
- Equipment calibration verification
- Detailed test procedures
- Original test data
- Summarized and reduced test data

Obtain NRC acceptance for hot startup readiness. Document all after-startup issues concerning the Primary Circuit and BOP Instrumentation, and provide post-startup resolution-of-issues planning.

5.4 Cost and Schedule

All testing activities during the hot startup checkout phase will occur during the period of 85 to 108 months after starting the final design.

Table 5. Costs Estimates for Hot Startup Readiness Testing

Test Contributor	Test Category	Test Costs (000's)
GA	Test Engineering, Planning, Preparation, and Monitoring	$1,100
Vendor(s)	Test Support	$600
	Total:	$1,700

6 OVERALL SCHEDULE FOR RPS, IPC, PCDIS DEVELOPMENT

An overall schedule for SSC-16 development is provided in Figure 6.

TRL	Org.	Activity	yr 1	yr 2	yr 3	yr 4	yr 5	yr 6	yr 7	yr 8	yr 9	yr 10	yr 11	yr 12
		Advance from TRL 4 to TRL 5												
		Advance from TRL 5 to TRL 6												
		Advance from TRL 6 to TRL 7												
		Advance from TRL 7 to TRL 8												
4 → 5	GA	Engineering Design												
	GA/Vendor	Test Planning												
	Vendor(s)	Provide and Test Equipment												
	GA/Vendor	Simulator												
5 → 6	GA	Engineering Design												
	GA/Vendor	Simulator												
	Vendor(s)	Provide Test Articles												
	GA/Test Facility	Test Configuration and Testing												
6 → 7	GA	Final Design and Procurement Specs												
	Vendor	Equipment Fabrication												
	GA/Vendor	Factory Acceptance Testing												
	GA/Wyle	Seismic Testing												
	GA/Vendor	On-Site Acceptance Testing												
7 → 8	GA/Vendor	Equipment Installation												
	GA/NGNP	Hot Startup Readiness Testing												

Figure 6. Overall Schedule for RPS, IPS and PCDIS Development

GENERAL ATOMICS
P.O. BOX 85608 SAN DIEGO, CA 92186-5608 (858) 455-3000