AREVA NP Inc.,

an AREVA and Siemens company

Technical Data Record

Document No: 12 - 9102279 - 001

NGNP Conceptual Design DDN/PIRT Reconciliation

Disclaimer

This report was prepared as an account of work sponsored by an agency of the United States Government. Neither the United States Government nor any agency thereof, nor any of their employees, nor their contractors and subcontractors, makes any warranty, express or implied, or assumes any legal liability or responsibility for the accuracy, completeness, or usefulness of any information, apparatus, product, or process disclosed, or represents that its use would not infringe privately owned rights. Reference herein to any specific commercial product, process, or service by trade name, trademark, manufacturer, or otherwise does not necessarily constitute or imply its endorsement, recommendation, or favoring by the United States Government or any agency thereof. The views and opinions of authors expressed herein do not necessarily state or reflect those of the United States Government or any agency thereof.

BEA Contract No. 000 75310

Safety Related? ☐ YES ☒ NO

Does this document contain assumptions requiring verification? ☐ YES ☒ NO

Signature Block

Name and Title/Discipline	Signature	P/LP, R/LR, A/A-CRF	Date	Pages/Sections Prepared/Reviewed/ Approved or Comments
L. Lommers		LP	2/23/09	All
J. Geschwindt		P	2/23/09	Sect. 4.1, 4.3
J. Mayer III		P	2/23/2009	Sect. 1, 3, 4.3, 5, App B
E. Herd		P	2/23/09	Sect. 2, 4.1, 4.2, 4.3, App A, B
F. Shahrokhi		LR	2/23/09	All

Note: P/LP designates Preparer (P), Lead Preparer (LP)
R/LR designates Reviewer (R), Lead Reviewer (LR)
A/A-CRF designates Approver (A), Approver of Customer Requested Format A-CRF

Record of Revision

Revision No.	Date	Pages/Sections/ Paragraphs Changed	Brief Description / Change Authorization
001	23 Feb 2009	Throughout	Miscellaneous editorial and formatting changes.
		Throughout	Changed "direct" to "conventional" or removed "direct" from "conventional direct" in reference NGNP configuration description.
		Throughout	Added table number continuation on each subsequent page of tables as applicable.
		Throughout	Corrected inconsistent references to NUREG-CR/6944 and 6844.
		Section 3	Clarified reference plant design description.
		Section 3 (Table 3-1)	Removed "direct" in "direct process steam supply".
		Section 4.1, Section 4.3	Added list of DDNs added/removed/modified to support reference design and to reconcile with PIRTs.
		Section 4.3	Clarified resolution option 3 (cases where normal design work will address the PIRT).
		Table 4-1	Removed DDN 4.1.4.3 which did not appear in the original list of DDNs.
		Table 4-1 and 4-2	Removed "changes in CTE" from DDN 2.4.1.0 as this was added later on during reconciliation process.
		Table 4-2 and 4-9	Moved reboiler DDN placeholder under new section 3.2.4 "Process Steam Supply System".
		Table 4-2 and 4.9	Corrected description for DDN 4.1.4.3.
		Table 4-1, 4-2, and 4-9	Clarified DDN 3.3.4.0.
		Table 4-1, 4-2, and 4-9	Clarified DDN 3.3.5.0.
		Table 4-1, 4-2, and 4-9	Clarified title of DDN 3.1.1.0. Also modified description in Table 4-1 for consistency.
		Table 4-3	Clarified rationale for AREVA PIRT ID # V2-2.1-11, V2-2.1-12, V2-2.2-15, V2-2.2-19 and V2-2.3-1. Clarified rationale and removed reference to DDN 3.3.4.0 in AREVA PIRT ID # V2-2.2-8 and V2-2.5-3.
		Table 4-3, Table 4-6	Modified rationale for V2-2.2-1, V2-2.2-2, V2-2.4-1, V5-5-8, V5-5-13, V5-6-21, V5-6-21a, V5-6-22, and V5-6-22a to indicate that item was already covered under DDN 2.4.1.0.
		Section 5	Clarified comment concerning use of composites.
		Table A-12	Corrected AREVA PIRT ID numbers for consistency with PIRT (V5-6-25(a), (b), (c)).
000	21 Jan 2009	All	Initial Issue

Table of Contents

Page

SIGNATURE BLOCK 2

RECORD OF REVISION 3

LIST OF TABLES 5

LIST OF FIGURES 7

1.0 INTRODUCTION 8

1.1 Purpose and Scope 8

1.2 Organization of DDN/PIRT Reconciliation Report 8

2.0 APPROACH TO DDN RECONCILIATION 10

3.0 SELECTED REFERENCE DESIGN FOR DDN RECONCILIATION 12

4.0 RECONCILIATION OF DDNS TO NGNP PIRT 14

4.1 DDNs Updated for Selected Reference NGNP Concept 14

4.2 Applicability of PIRTs to Selected Reference Concept 15

4.3 DDN Reconciliation Results 15

5.0 CONCLUSIONS 127

6.0 REFERENCES 128

APPENDIX A : ORIGINAL PIRT SUMMARY LIST A-1

APPENDIX B : FUEL PIRT CONSOLIDATED SUMMARY LIST B-1

List of Tables

Page

TABLE 3-1: PARAMETERS FOR SELECTED REFERENCE DESIGN 12
TABLE 4-1: DDN LIST BASED ON AREVA'S PCDSR 18
TABLE 4-2: DDN LIST BASED ON SELECTED REFERENCE CONCEPT (LOW TEMPERATURE CONVENTIONAL STEAM CYCLE) 37
TABLE 4-3: ACCIDENT AND THERMAL FLUIDS ANALYSIS PIRT-TO-DDN RECONCILIATION 53
TABLE 4-4: FISSION PRODUCT TRANSPORT PIRT-TO-DDN RECONCILIATION 73
TABLE 4-5: HIGH TEMPERATURE MATERIALS PIRT-TO-DDN RECONCILIATION 80
TABLE 4-6: GRAPHITE PIRT-TO-DDN RECONCILIATION 92
TABLE 4-7: PROCESS HEAT AND HYDROGEN PRODUCTION PIRT-TO-DDN RECONCILIATION 100
TABLE 4-8: FUEL PIRT-TO-DDN RECONCILIATION 105
TABLE 4-9: UPDATED DDN LIST BASED ON PIRT RECONCILIATION 109

TABLE A-1: NORMAL OPERATION (20-100% POWER) PIRT CHART (TABLE 2.1 OF NUREG/CR-6944, V2) A-2
TABLE A-2: GENERAL LOFC PIRT CHART (TABLE 2.2 OF NUREG/CR-6944, V2) A-5
TABLE A-3: PRESSURIZED LOFC PIRT CHART (TABLE 2.3 OF NUREG/CR-6944, V2) A-7
TABLE A-4: DEPRESSURIZED LOFC PIRT CHART (TABLE 2.4 OF NUREG/CR-6944, V2) A-8
TABLE A-5: AIR INGRESS LOFC PIRT CHART (TABLE 2.5 OF NUREG/CR-6944, V2) A-9
TABLE A-6: REACTIVITY (ATWS) PIRT CHART (TABLE 2.6 OF NUREG/CR-6944, V2) A-11
TABLE A-7: IHX FAILURE (MOLTEN SALT) PIRT CHART (TABLE 2.7 OF NUREG/CR-6944, V2) A-13
TABLE A-8: WATER-STEAM INGRESS PIRT CHART (TABLE 4.8 OF NUREG/CR-6944, V2) A-14
TABLE A-9: FISSION PRODUCT TRANSPORT AND DOSE PIRT CHART (TABLE 10 OF NUREG/CR-6944, V3) A-15
TABLE A-10: PIRT TABLE FOR HIGH-TEMPERATURE MATERIALS (TABLE 6 OF NUREG/CR-6944, V4) A-19
TABLE A-11: HTGR EVENT SCENARIO FOR MATERIALS PIRT EXERCISE (TABLE 2 OF NUREG/CR-6944, V4) A-25
TABLE A-12: GRAPHITE PIRT CHART (TABLE 3 AND SECTION 3.9 OF NUREG/CR-6944, V5). A-26
TABLE A-13: PROCESS HEAT AND HYDROGEN PIRT CHART (TABLE 4.1 OF NUREG/CR-6944, V6) A-32
TABLE B-1: NEW, CONSOLIDATED FUEL PIRT ITEMS B-2

List of Tables
(continued)

Page

TABLE B-2: ORIGINAL FUEL PIRT ITEMS ASSOCIATED WITH EACH CONSOLIDATED FUEL PIRT ITEM B-5

List of Figures

Page

FIGURE 2-1: NGNP DDN/PIRT RECONCILIATION PROCESS 11
FIGURE 3-1: REFERENCE NGNP SYSTEM CONFIGURATION 13

1.0 INTRODUCTION

The Next Generation Nuclear Plant (NGNP) project is intended to demonstrate the applicability of the high temperature reactor (HTR) to high efficiency electricity production and to nuclear process heat applications including hydrogen production. The Idaho National Laboratory (INL) is facilitating the NGNP project for the U.S. Department of Energy (DOE). A goal of the project is to perform the concept development, technology development, and prototype demonstration in cooperation with industry to lead to the future commercialization of this technology.

The HTR is an advanced nuclear technology and significant research and development (R&D) will be necessary to support the design, licensing, and deployment of HTRs to serve the intended markets. Reactor designers identify required R&D via Design Data Needs (DDNs). Such DDNs contain a number of needs including development and qualification of advanced fuels and other advanced materials, component development, codes and methods, etc. An initial set of DDNs was developed by AREVA as part of the NGNP Preconceptual Design Studies Report (PCDSR) [Reference 1].

The U.S. NRC has conducted two comparable exercises to identify phenomena and data required to support safety analysis and licensing of future HTRs. Phenomena Identification and Ranking Tables (PIRTs) are developed for HTR TRISO fuel in NUREG/CR-6844 [Reference 2]. Other PIRTs for the NGNP were developed in NUREG/CR-6944 [Reference 3].

1.1 Purpose and Scope

This report documents AREVA's performance of a detailed reconciliation of Design Data Needs (DDNs), formulated by AREVA for its selected reference NGNP design, against the PIRTs formulated by the NRC for the NGNP project. The objective is to ensure each issue raised in the PIRTs is addressed by one or more DDNs. For those issues raised in the PIRTs that are not adequately addressed by a DDN, DDNs were revised and/or developed as part of this work scope. This reconciliation is documented in this final report, which contains a detailed mapping of DDNs to each issue identified in the PIRTs.

Due to the recent change in AREVA's anticipated reference design, this task first involved a revision to the existing AREVA DDN list to account for the new design. Once this was complete, AREVA reviewed the PIRTs for the NGNP design (NUREG/CR-6944) and the TRISO Coated Particle Fuel (NUREG/CR-6844) and determined which of the PIRTs are: (1) covered by the revised DDNs, (2) not covered by the revised DDNs, or (3) not applicable to the reference design. Using this information, AREVA revised the DDNs to cover all of the applicable PIRT items and created a matrix showing how the PIRTs are covered by the DDNs.

1.2 Organization of DDN/PIRT Reconciliation Report

Section 2 of this report describes the methodology used to obtain the current list of DDNs and reconcile those DDNs with the PIRTs.

Section 3 describes the selected AREVA NGNP reference design.

Section 4 describes the execution of the work to update the PCDSR list of DDNs to be consistent with the current reference design, to identify the PIRT items from NUREG/CR-6944 and NUREG/CR-6844, and to reconcile the DDN list with the list of PIRTs. The final set of DDNs reconciled with the PIRTs is contained in the last subsection of Section 4.

Section 5 summarizes key conclusions from this study.

Appendices A and B provide a full listing of the PIRTs from NUREG/CR-6944 and NUREG/CR-6844. The tables in the appendices correlate the compact identifier used for each PIRT entry in this report with the tables and identifiers used in the NRC PIRT reports.

2.0 APPROACH TO DDN RECONCILIATION

The DDN/PIRT reconciliation task was divided into discrete logical steps, as shown in Figure 2-1. To perform the overall task, the following steps were taken:

- **Initial DDN List:** The R&D survey forms from Appendix C of the PCDSR [Reference 1] were compared to the R&D needs described in chapter 19 of the same document. Aside from minor details, the information from Appendix C and chapter 19 was found to be identical. An initial DDN list was generated based on this data.

- **Reference Design Comparison:** The initial DDN list was then modified to match the selected reference design (see Section 3). DDNs not applicable to the design were identified and removed from the list and new DDNs specific to the design were added to the initial list.

- **Raw PIRT Tables:** In parallel, working copies of the PIRT summary tables found in volumes 2-6 of NUREG/CR-6944 were generated. A PIRT list was also generated for fuel-related PIRTs (as found in NUREG/CR-6844, Vol. 1). However, this PIRT identifies a total of 328 items having an impact on the development and qualification of TRISO particle-based fuel for use in the NGNP or other reactors. The level of detail behind these items is far greater than that of the subsequently developed PIRT items for the NGNP reactor, documented in NUREG/CR-6944, and of the AREVA NGNP DDNs to which the PIRT item set is to be compared. Therefore, in order to facilitate a reasonable comparison between the TRISO Fuel PIRT results and the AREVA DDN set, a consolidated set of Fuel PIRT items was developed by combining related items from the original Fuel PIRT item set.

- **Relevance Assessment of the PIRTs for the Reference Design:** Once the PIRT tables were generated, each item was evaluated in order to identify its relevance as compared to the selected reference design. An applicability column was added to every table and each item was identified as being relevant to the reference design or not.

- **Reconciliation of PIRTs to DDNs:** Next, each PIRT was evaluated to determine whether it represented a design data need or not. Seven reconciliation options were identified:
    - The issue is covered by an existing/established data
    - The issue is not relevant to the selected NGNP concept
    - The issue will be resolved in normal design work
    - The issue is of low importance, no further data is needed
    - The issue is covered by an existing DDN
    - The issue requires modification of an existing DDN
    - The issue requires a new DDN

- **Final DDN list and Reconciliation Tables:** Following the reconciliation effort, as new DDNs were identified and others modified, a new DDN list was generated for the reference design. Additionally, this reconciliation effort produced a table of PIRTs with associated DDNs.

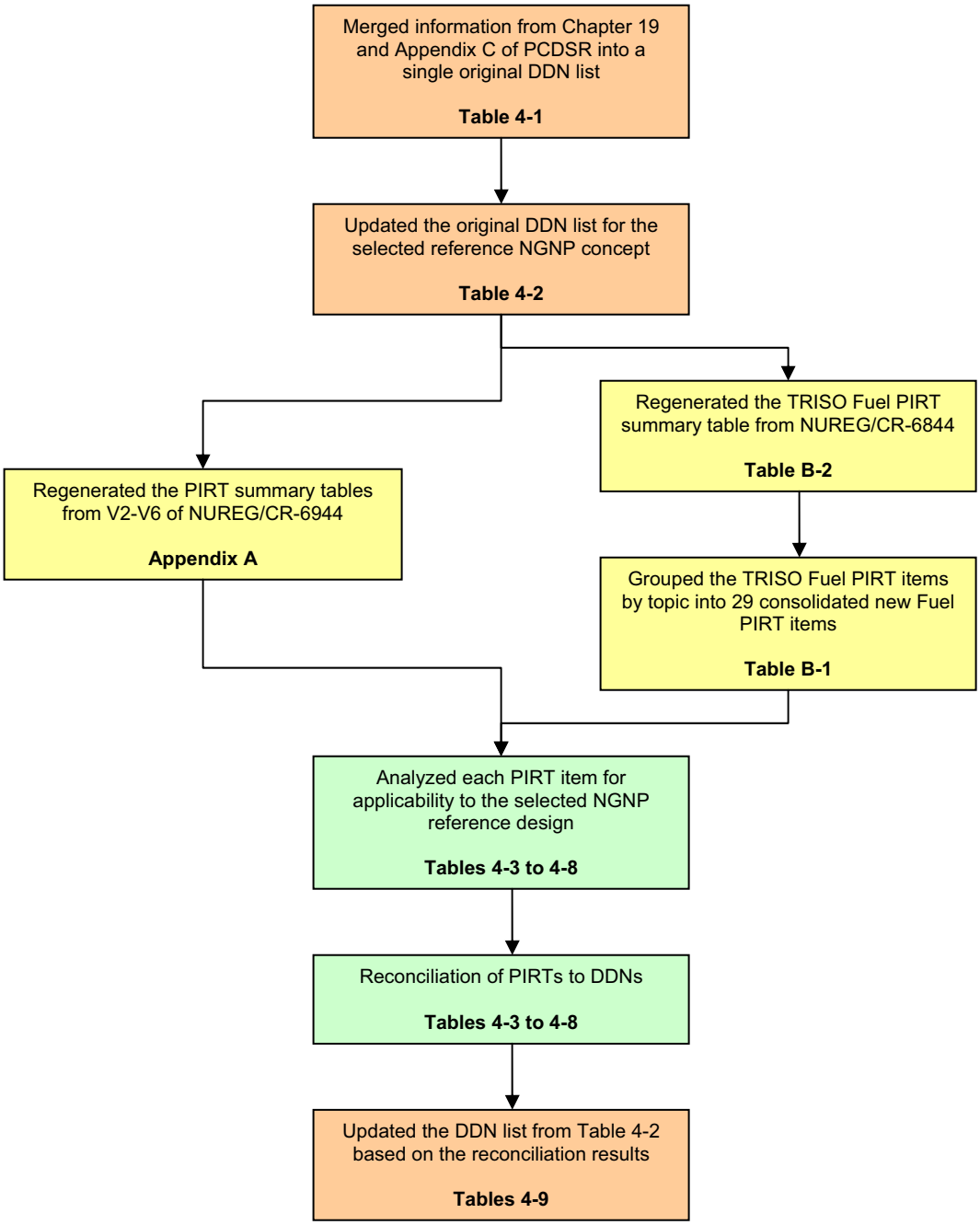

Figure 2-1: NGNP DDN/PIRT Reconciliation Process

3.0 SELECTED REFERENCE DESIGN FOR DDN RECONCILIATION

In order to fully execute the methodology discussed in the preceding section, a clear, concise definition of the NGNP design is required. The design concept considered in this report is based on the 750°C conventional steam cycle commercial First-of-a-Kind (FOAK) concept discussed at the September 22 and October 28, 2008 Senior Advisory Group meetings.

This moderate temperature plant design utilizes an indirect cycle configuration to supply high temperature steam for both electricity generation and process heat applications. Primary coolant carries reactor heat directly to a steam generator to produce steam in the intermediate loop. The secondary steam then transfers the heat to steam reboilers where process steam is generated in the tertiary loop for various industrial processes. The secondary steam can also drive steam turbines for dedicated electricity production or cogeneration. The approximately 550°C steam generator outlet temperature in the secondary loop provides for efficient energy utilization in many industrial processes. This design is appropriately referred to as the "conventional steam cycle", since this is the general configuration that has been used in all past HTR steam cycle concepts.

This reference NGNP plant is assumed to be a FOAK plant, rather than a research or prototype plant. As such, the plant is assumed to be co-located with an industrial petrochemical complex. In keeping with the industrial nature of the plant, no 10% power, experimental side loop is included, nor is dual mode operation at higher temperatures considered.

Key parameters summarizing this reference design are provided in Table 3-1, below. A schematic representation of the primary system, secondary system, and process heat interfaces is presented in Figure 3-1 following the table.

Table 3-1: Parameters for Selected Reference Design

Reactor Core Configuration	Prismatic Annular, 102 column, 10 blocks/column
Reactor Core Power Level	600 MWt
Reactor Core Outlet Temperature	750°C
Reactor Core Inlet Temperature	350°C
Steam Supply Temperature	550°C
Type of Power Conversion Cycle	Conventional Steam Cycle
Power Conversion System Configuration	Steam Generator (SG) in primary gas loop Steam Turbine uses secondary steam from SG Extraction steam available for cogeneration
Number of Main Loops	2
Number of Side Loops	0
Process Steam Supply	Steam/Steam Reboiler

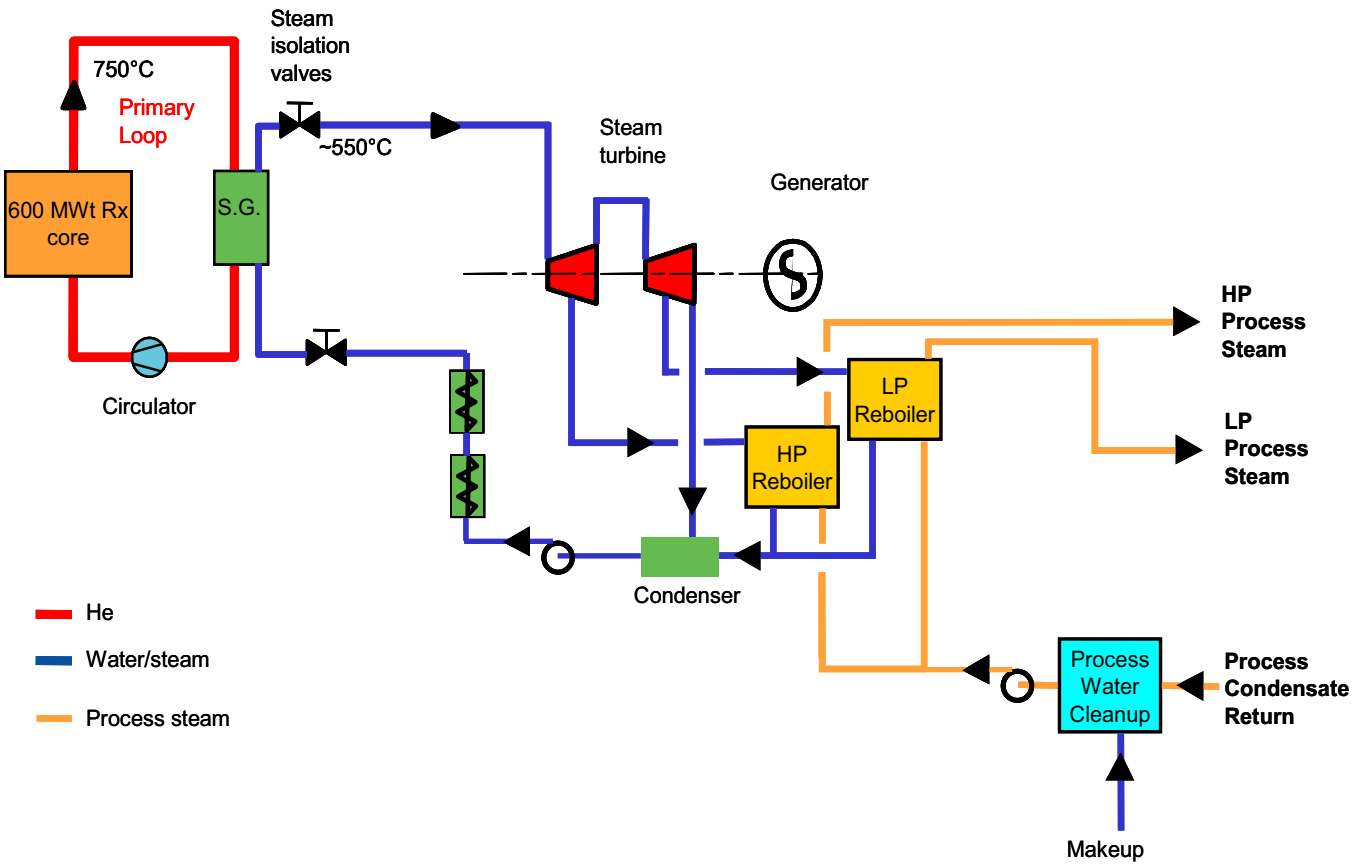

Figure 3-1: Reference NGNP System Configuration

4.0 RECONCILIATION OF DDNS TO NGNP PIRT

4.1 DDNs Updated for Selected Reference NGNP Concept

The AREVA Preconceptual Design Studies DDNs were originally documented in Chapter 19 and Appendix C of the AREVA NGNP PCDSR [Reference 1]. These DDNs form the basis for this reconciliation effort.

The DDN information found in the PCDSR was merged into a single original DDN list. The R&D needs from PCDSR Chapter 19 were found to be in agreement with the R&D Survey Forms from PCDSR Appendix C. Some minor changes were made to the list in order to better capture the information found in Chapter 19 and Appendix C of the PCDSR. Table 4-1 shows the resulting "initial" DDN list based on the PCDSR.

Once this verification effort was performed, Table 4-1 was updated for the selected reference NGNP concept as described in Section 3. Information related to operation above 750°C (high temperature steel for example), IHX use, the hydrogen production loop and the Brayton cycle was removed. Items identified as proven technology were also removed.

To accommodate the reference concept, a few DDNs on the following topics were added or modified: steam generator, water/steam ingress, conventional steam cycle.

Table 4-2 is the table of updated DDNs for the selected reference NGNP concept.

The following DDNs were added to support the revised reference configuration:

- 2.2.4.1 – RPV Low Temperature Material
- 3.1.6.0 – Steam Generator
- 3.2.4.1 – Reboiler
- 4.1.4.3 – Chemistry Effects of Steam/Water

The following DDNs were modified or clarified for the revised reference:

- 2.2.3.1 – Reactor Internal Materials
- 3.1.5.0 – Hot Gas Ducts
- 4.1.2.1 – RELAP5-3D
- 4.1.2.2 – STAR-CD
- 4.1.4.1 – FP Transport
- 4.2.1.4 – NEPTHYS

Finally, the following DDNs were eliminated as not being applicable to the revised reference configuration:

- 2.2.1.1 – RPV High Temperature Material
- 2.2.2.1 – IHX Materials
- 2.3.3.1 – Top Plenum Shroud
- 2.3.4.1 – Hot Gas Duct Liners
- 2.3.5.1 – Core Support Insulation Blocks
- 3.1.2.0 – IHX (Tube)
- 3.1.3.0 – Secondary Helium Loop IHX (Plate)
- 3.1.4.0 – Hot Gas Isolation Valves
- 3.2.1.1 – He/N_2 Turbine

- 3.2.1.2 – He/N_2 Compressor
- 3.2.1.3 – Generator and Electrical Equipment
- 3.2.1.4 – He/N_2 Cycle Control and Ducting
- 3.2.2.1 – HRSG

4.2 Applicability of PIRTs to Selected Reference Concept

NUREG/CR-6944 and NUREG/CR-6844 contain the PIRT charts used in this reconciliation effort. NUREG/CR-6944 includes 6 volumes. Volumes 2 through 6 discuss the application of the PIRT process to the following issues: Accident and Thermal Fluid Analysis (V2), Fission-Product Transport and Dose (V3), High-Temperature Materials (V4), Graphite (V5), and Process Heat and Hydrogen Co-Generation (V6). The PIRT summary tables found in these five volumes were regenerated in Excel and can be found in Appendix A.

NUREG/CR-6844 includes the TRISO Fuel PIRT. The summary table was generated in Excel as well. However, due to the large number of items and the more detailed nature of the fuel PIRT exercise, the TRISO Fuel PIRTs were grouped by topic. Twenty-nine topics were identified and they represent the 29 consolidated new Fuel PIRT items which were studied as part of the DDN/PIRT reconciliation effort. Appendix B includes a table of the new Fuel PIRT items and a table with the complete list of TRISO Fuel PIRT items as found in NUREG/CR-6844.

The tables in Appendix A and B all contain a column with the AREVA PIRT ID No. This unique ID was assigned to each PIRT item in order to identify each PIRT item with more ease. The AREVA PIRT ID No. follows the subsequent format: Volume Number (Vx) – PIRT table number – item number. For example, V2-2.1-1 refers to Item #1 of Table 2.1 of Volume 2 of the original PIRT document.

Because the Water/Steam Ingress PIRT from Volume 2 does not come from one specific summary table (as explained in Appendix A), the AREVA PIRT ID No. uses X.8 for the PIRT table number.

In the case of the new TRISO Fuel PIRTs, the AREVA PIRT ID No. is: VF-N- Item number. For example, VF-N-2 refers to Item #2 of the new (N) TRISO Fuel PIRTs.

Once the raw PIRT charts were populated, each item was analyzed for applicability to the selected NGNP reference design. This task was undertaken because some items were only applicable to pebble bed cores, higher temperature HTRs or concepts including a hydrogen loop and were therefore irrelevant to this task. The results of this applicability assessment are found in Section 4.3 as part of the final DDN reconciliation results.

4.3 DDN Reconciliation Results

Next, the actual DDN/PIRT reconciliation subtask was performed. For each of the PIRTs, seven possible resolutions were identified:

1. The issue is covered by existing/established data

   This resolution was assigned to those PIRT items that the NRC panel rated as having a ‘High” current knowledge level (or a “Medium” current knowledge for items with “Low” importance, etc.), unless the AREVA review identified any specific additional basic data that is not available.

2. The issue is not relevant to the selected NGNP concept (as mentioned in Section 4.2)

   Since the PIRT tables were generated to cover most HTR designs considered viable at the time they were prepared, several of these items do not apply to the selected AREVA reference design and are indicated as such with this designator.

3. The issue will be resolved in normal design work

This resolution was applied to those PIRT items that AREVA reasonably expects will be addressed as part of the normal design and analysis work without directly requiring new research and data collection. Generally, these PIRT items are actually the result of an analytical effort rather than basic R&D.

The required information will be generated as the result of design or analysis tasks anticipated for Conceptual or Preliminary Design. Numerous analyses will be performed during the various phases of the NGNP design project. These tasks will determine the environment to which systems and components are exposed. They will determine detailed sequences for transients and accidents which then form the basis for subsequent safety analyses. The design process will establish performance and margin allocations. Stress levels in various components under a variety of conditions will be evaluated. System responses will be analyzed to determine boundary conditions imposed on other components or detailed analyses. In short, virtually every aspect of the plant is examined by the design analyses.

The methods used vary widely depending on the specific analysis. Nonetheless, the general process is repeated in each case. Generally accepted methods are applied using design data (e.g., dimensions, system boundary conditions, material selections, etc.) as input. The results of the analysis in turn provide input to subsequent design specifications, trade studies, or more detailed analyses.

This does not mean that current models are fully adequate in all cases to reach an acceptable conclusion to the issue or that no significant effort is required to reach an acceptable result. However, methods development needed to perform anticipated design and analysis tasks are already identified in the other DDNs. For example, the structural analysis of a specific component requires detailed properties for the component's material. However, this does not require a DDN to perform the analysis. It may or may not require a separate DDN to obtain the relevant material properties, depending on whether or not they are already known. But such a DDN, if required, would not be linked directly to the structural analysis.

An example of such a PIRT item is V2-2.1-2, "Core flow distribution, flow in active core". This flow distribution will be calculated for a number of different conditions as part of the normal design work. The methods used are conventional and well understood. Nonetheless, a key parameter affecting the analysis is core bypass flow which is largely governed by the distribution of gaps in the core. The gap distribution is governed by the irradiation induced graphite dimensional changes. These dimensional changes are the part of the process that is not well known. Additional R&D data is expected to be necessary to predict these dimensional changes. But this R&D shows up elsewhere in the PIRT and the DDNs. It does not require an additional DDN for the subsequent analysis which will use the data.

4. The issue is of low importance, no further data is needed

   This resolution was assigned to those PIRT items that the NRC panel rated as having a "Low" importance level. These items can be adequately assessed by scoping analyses based on currently available data.

5. The issue is covered by an existing DDN

   This resolution was assigned where the information needs identified within the PIRT were already included within an existing DDN.

6. The issue requires modification of an existing DDN

   This resolution was assigned when an existing DDN dealt with issues similar to those identified within a PIRT item or where the definition of an existing DDN did not explicitly include the PIRT-identified data need.

7. The issue requires a new DDN

   This resolution was assigned where no existing DDN could be identified that considered the PIRT-identified data need or could be appropriately modified to consider the need.

Tables 4-3 through 4-8 include the results of this task. The rationale column provides the resolution chosen and, in some cases, an explanation for that choice. In the case where the issue is covered by an existing DDN, requires modification of an existing DDN, or requires a new DDN, the associated AREVA DDN number is listed in the appropriate column.

As a result of the DDN/PIRT reconciliation, the DDN list shown in Table 4-2 (Section 4.1) was updated to include the new DDNs and the modifications made to some of the existing DDNs.

Table 4-9 is the final DDN list which illustrates these revisions.

The following DDNs are new DDNs which were added to Table 4-9 following the PIRT/DDN reconciliation effort:

- 1.3.1.0 – Fuel Oxidation under Water/Air Ingress
- 1.3.2.0 – Fuel Compact Properties and FP Interactions
- 1.3.3.0 – FP Speciation During Mass Transfer
- 2.2.4.2 – Field Fabrication of Vessels
- 2.4.2.0 – Graphite/Fission Product Interactions

The DDNs modified as part of the reconciliation effort are:

- 2.2.3.1 – Reactor Internal Materials
- 2.2.4.1 – RPV Low Temperature Material
- 2.3.1.1 – Control Rod Sheaths
- 2.3.1.2 – Control Rods (solid ceramic control rod without sheaths)
- 2.3.2.1 – Upper Core Restrains
- 2.3.6.1 – Ceramic Insulation
- 2.4.1.0 – Graphite
- 3.1.1.0 – Primary Gas Circulators
- 3.1.5.0 – Hot Gas Ducts
- 4.1.4.1 – FP Transport
- 4.2.2.2 – STAR-CD

Table 4-1: DDN List Based on AREVA's PCDSR

Section	AREVA DDN Number	DDN Title	Description	Notes
1	**Fuel**			
1.1	**Fuel Development**			
1.1.1	**Kernel**			
	1.1.1.1	Kernel Materials	Develop advanced carbon source for UCO kernel production. Test materials in pilot-facility fabricating UCO kernels.	
	1.1.1.2	Kernel Manufacturing	Develop advanced kernel wash and dry system to effectively increase throughput of kernel line with no degradation in kernel quality. Develop enhanced sintering for either UCO (large fluidized bed sintering) or UO2 (static bed sintering) with a focus on increased throughput and reduced cost.	
1.1.2	**Coating**			
	1.1.2.1	Coating Materials	Not used.	R&D need of coating materials qualification has been included in 1.1.3.1 and 1.1.3.2.
	1.1.2.2	Coating Manufacturing	Investigate largest coating batches size capable in existing 6" coating retort. Determine economic feasibility of using a 6" retort for production.	Acceptability of coatings should initially be based on physical characteristics of the coatings after manufacture. Should a larger coater be required, plan on implementing the R&D of that coater as part of the facility expansion for production.
1.1.3	**Compact**			
	1.1.3.1	Compact Materials	Select graphitic matrix, resin, etc. to produce thermosetting compacts. Demonstrate performance of compacts under normal and off-normal accident conditions.	

Table 4-1 continued (DDN List Based on AREVA's PCDSR)

Section	AREVA DDN Number	DDN Title	Description	Notes
	1.1.3.2	Compact Manufacturing	Establish compact manufacturing capabilities in the US based on the AREVA process. Develop (or confirm) compact pressures and temperatures to minimize fuel damage. Develop heat treat process to ensure complete graphitization of the matrix material. Perform irradiation tests on compacts to demonstrate performance for nominal and off-nominal operating conditions. Recommend expansion of BWXT fuel line for compacts.	
1.1.4	**Fuel Mass Production**			
	1.1.4.1	Fuel Mass Production	R&D should focus on areas where product uniformity and quality are most at jeopardy. Initial R&D should focus on kernel wash & dry, sintering, coating (assuming larger than 6" coater required), compact matrix formulation, and compact fabrication. Irradiation testing will be required to confirm fuel performance matches performance from the laboratory/pilot facilities. Some chemical processing areas or the process will require significant scale-up to meet production demands.	
1.2	**Fuel Qualification**			
	1.2.1.0	Quality Control Methods	Develop highly reliable instrumentation and data acquisition software to ensure fuel particle quality is built into the fuel. Capture essential data for fuel certification.	

Table 4-1 continued (DDN List Based on AREVA's PCDSR)

Section	AREVA DDN Number	DDN Title	Description	Notes
	1.2.2.0	Inspection Techniques	Develop QC inspection techniques that directly relate to irradiation performance. Develop techniques for large-scale production capabilities that minimize the quantity of materials that require destructive evaluation to ensure statistically acceptable fuel is produced. Irradiation testing of the compacts to attempt to relate as-measured attributes actually correlated to performance would be necessary to ensure the correct attributes are being measured and characterized.	Techniques to be investigated could be: micro focus x-ray of particles (dimensional inspection of particle layers), mercury porosymetry (buffer density), sink-float (IPyC, SiC, and OPyC density), anisotropy measurements of the IPyC and OPyC layers, leach-burn-leach test or weak irradiation techniques (particle leak tightness), etc. Many QC techniques need to be developed with mass production in mind.
2	**Materials Development and Qualification**			
2.1	**All Materials**			
	2.1.1.0	Tribology	Perform tribology tests on expected couples of materials in representative HTR conditions.	This type of tests requires dedicated facilities.
2.2	**Metallic Materials**			
2.2.1	**RPV High Temperature Materials**			
	2.2.1.1	RPV High Temperature Material	Study: - Mechanical properties on heavy section products (base and weld metal). - Effect of aging. - Effect of irradiation. - Corrosion in helium environment. - Weldability. - Emissivity. - Negligible creep conditions. - Creep fatigue. A specific test program on representative plates and forging (including welded joints) will be required for the component qualification.	

Table 4-1 continued (DDN List Based on AREVA's PCDSR)

Section	AREVA DDN Number	DDN Title	Description	Notes
2.2.2	**IHX Materials**			
	2.2.2.1	IHX Materials	For both nickel-base alloys, the following issues need to be addressed: - Baseline mechanical property data, including creep-fatigue data. - Long-term thermal stability. - Effect of helium coolant chemistry on material degradation. - Effect of 80%nitrogen-20%helium mixture on material degradation. - Corrosion effects on mechanical properties.	Two available conventional nickel-base alloys (617 and 230) have been selected as structural materials for the heat exchanger: - 617 (NiCr22Co12Mo), which has been widely studied in the early 80's for HTR application. - 230 (NiCr22W14), which has been developed more recently but it exhibits better corrosion resistance.
2.2.3	**Reactor Internal Materials**			
	2.2.3.1	Reactor Internal Materials	For Alloy 800H and Mod 9Cr1Mo: - Emissivity measurement under likely representative state of surface (as machined and oxidized after machining). - Corrosion behavior under representative primary helium environment. For extension of 800H coverage in ASME III-NH the following items are needed: - Long term tests at temperature higher than 760°C - Tensile tests at temperature higher than 870°C. - Extension of allowables to cover 60 years lifetime. ASME code subsection NH does not currently cover heavy section products and needs to be updated to cover specific aspects of Mod 9Cr1Mo.	Efforts in progress to extend coverage of alloy 800H up to ASME III-NH. Modified 9Cr1Mo is also a candidate if temperatures are kept below 750°C. Needs for mod 9Cr1Mo are already covered in the R&D needs for the vessel system. Needs for metallic materials in operation above 850°C are covered in the R&D needs for IHX materials.

Table 4-1 continued (DDN List Based on AREVA's PCDSR)

Section	AREVA DDN Number	DDN Title	Description	Notes
2.3	**Ceramic Materials**			
2.3.1	**Control Rods**			
	2.3.1.1	Control Rod Sheaths	Study: - Thermal-physical properties (K, CTE, Cp). - Mechanical properties including multiaxial strength. - Fracture properties. - Fatigue properties. - Behavior under oxidized atmosphere and oxidation effects on properties. - Codification. - Materials envisioned so far are C/C or C/SiC composites. - Test and irradiate component mock-ups (e.g. sample joints)	
	2.3.1.2	Control Rods (solid ceramic control rod without sheaths)	Study: - Thermal-physical properties (K, CTE, Cp). - Mechanical properties including multiaxial strength. - Fracture properties. - Fatigue properties. - Behavior under oxidized atmosphere and oxidation effects on properties. - Codification. - Materials envisioned so far are C/C or C/SiC composites. - Test and irradiate component mock-ups (e.g., sample joints)	

Table 4-1 continued (DDN List Based on AREVA's PCDSR)

Section	AREVA DDN Number	DDN Title	Description	Notes
2.3.2	**Upper Core Restraints**			
	2.3.2.1	Upper Core Restraints	Study: - Thermal-physical properties (K, CTE, Cp). - Mechanical properties including multiaxial strength. - Fracture properties. - Fatigue properties. - Behavior under oxidized atmosphere and oxidation effects on properties. - Codification. - Materials envisioned so far are C/C or C/SiC composites. - Test and irradiate component mock-ups (e.g., sample joints)	
2.3.3	**Top Plenum Shroud**			
	2.3.3.1	Top Plenum Shroud	Study: - Thermal-physical properties (K, CTE, Cp). - Mechanical properties including multiaxial strength. - Fracture properties. - Fatigue properties. - Behavior under oxidized atmosphere and oxidation effects on properties. - Codification. - Materials envisioned so far are C/C or C/SiC composites. - Test and irradiate component mock-ups (e.g. sample joints)	

Table 4-1 continued (DDN List Based on AREVA's PCDSR)

Section	AREVA DDN Number	DDN Title	Description	Notes
2.3.4	**Hot Gas Duct Liners**			
	2.3.4.1	Hot Gas Duct Liners	Study: - Thermal-physical properties (K, CTE, Cp). - Mechanical properties including multiaxial strength. - Fracture properties. - Fatigue properties. - Behavior under oxidized atmosphere and oxidation effects on properties. - Codification. - Materials envisioned so far are C/C or C/SiC composites. - Test and irradiate component mock-ups (e.g. sample joints)	
2.3.5	**Core Support Insulation Blocks**			
	2.3.5.1	Core Support Insulation Blocks	Study: - Thermal-physical properties (K, CTE, Cp). - Mechanical properties including multiaxial strength. - Fracture properties. - Fatigue properties. - Behavior under oxidized atmosphere and oxidation effects on properties. - Codification. - Materials envisioned so far are C/C or C/SiC composites. - Test and irradiate component mock-ups (e.g. sample joints)	

Table 4-1 continued (DDN List Based on AREVA's PCDSR)

Section	AREVA DDN Number	DDN Title	Description	Notes
2.3.6	**Ceramic Insulation**			
	2.3.6.1	Ceramic Insulation	Study: - Thermal-physical properties (K, CTE, Cp). - Behavior under oxidation.	
2.4	**Graphite Materials**			
	2.4.1.0	Graphite	Study: - Thermal-physical properties (K, CTE, Cp, emissivity). - Mechanical properties including multiaxial strength. - Fracture properties. - Fatigue properties. - Irradiation effects on properties including irradiation induced dimensional change, irradiation induced creep, changes in thermal conductivity, and annealing out of thermal conductivity changes at high temperature. - Behavior under oxidized atmosphere including oxidation effects on properties. - Tribology. - Codification including fracture models. - Graphite oxidation from water ingress. - Graphite oxidation from air ingress. Develop ASME and ASTM codes and standards for graphite essential for timely application of graphite for NGNP reactor. Graphite qualification.	Grades presently under consideration are PCEA, NBG17 and/or NBG18.

Table 4-1 continued (DDN List Based on AREVA's PCDSR)

Section	AREVA DDN Number	DDN Title	Description	Notes
3	**Components Testing**			
3.1	**Helium Loop**			
	3.1.1.0	Primary Gas Circulators	Component qualification tests: - Air tests of the impeller (at scale 0.2 to 0.4). - Helium tests of Magnetic and Catcher bearings. - Tests of the circulator shutoff valve. - Integrated tests near full-scale of the whole machine should be required on a large He loop, in air at the manufacturer's site or during the NGNP commissioning phase.	
	3.1.2.0	IHX (Tube)	Urgent to launch an R&D program: - Tests to confirm fabrication feasibility (tube bending, tube welding, nozzles on hot header, ISIR and assembly, etc). - Corrosion and nitriding tests on base and coated materials in representative environment. - Representative IHX mock-ups from thermo-hydraulic and manufacturing point of view. Test in helium and He+N_2 mixture are recommended, that leads to the availability (design and build) on time of a large test facility (around 10MW). For the component qualification, it is considered that the qualification on a mock-up at scale 1 on a large test facility will be sufficient (no need for intermediate testing on small size mock-ups), subject that manufacturing issues be addressed by dedicated actions. Experimentally determine the degree of nitriding that occurs in potential PCS materials and quantify the effects of temp on nitriding.	He + N_2 mixture -> not applicable for steam cycle.

Table 4-1 continued (DDN List Based on AREVA's PCDSR)

Section	AREVA DDN Number	DDN Title	Description	Notes
	3.1.3.0	Secondary Helium Loop IHX (Plate).	Urgent to launch an R&D program: - For development of visco-plastic model (material data-base to be completed). - For corrosion tests on base and coated materials in representative environment. - For the development of manufacturing techniques (fusion welding, diffusion bonding, brazing, forming, etc). - For tests on representative IHX mock-ups from thermo-hydraulic and manufacturing point of view (diffusion bonding, brazing, ISIR). For the component qualification, a 3 steps approach is proposed: - Tests with small mock-ups in air. - Tests with small mock-ups in He (about 1 MW test loop). These tests should be used as a basis for providing recommendations on the type of concept to be used for the NGNP. - Final qualification on a mock-up at scale 1 (at least for the channels and the plates) on a large test facility (around 10MW - need to design and build these facilities).	The Plate IHX feasibility is a concern since NGNP requirements lead to operate at high temperature on the 60 MW loop.

Table 4-1 continued (DDN List Based on AREVA's PCDSR)

Section	AREVA DDN Number	DDN Title	Description	Notes
	3.1.4.0	Hot Gas Isolation Valves.	"The qualification should be performed in 2 steps: - Elementary tests to characterize the fiber conditions, assembly techniques, spacers, etc. - Tests on a full scale mock-up in a big test facility in He/N_2 (around 10 MW) Test should at least cover: - Manufacturing parameters. - Depressurization tests. - Pressure loss, heat loss, temperature of the support tube (in mixture He/N_2 conditions). - Leak tightness tests of the valve. - Closing and opening. - Fatigue and creep-fatigue of specific areas.	

Table 4-1 continued (DDN List Based on AREVA's PCDSR)

Section	AREVA DDN Number	DDN Title	Description	Notes
	3.1.5.0	Hot Gas Ducts	Demonstrate that no significant hot streaks should be expected with the V-shaped metallic concept. Qualification should be performed in 3 steps: - Elementary tests to characterize the fiber conditions, assembly techniques, spacers, etc. - Tests on a small mock-up in a test facility of about 1 MWt or less to validate the fiber specification and the ceramic spacer specification (if possible in He). - Tests on a full scale mock-up in a big test facility in He (around 10 MW). Test should at least cover: - Depressurization tests. - Pressure loss, heat loss, temperature of the support tube (in He conditions). - Leak tightness tests of the connection areas. - Fatigue and creep-fatigue tests (e.g. bellows, V-shape spacers, etc). For the Brayton cycle gas duct, experimentally determine the degree of nitriding that occurs in potential PCS materials and quantify the effects of temp on nitriding.	The reference design for the primary and secondary hot gas duct is the V-shaped metallic concept. The ceramic concept is envisioned as a fall back option for the primary hot gas duct. In the first stages of the design, tests should cover both the metallic and ceramic design (pending the confirmation of the feasibility of the metallic design).
3.2	**PCS**			
3.2.1	**Brayton Cycle**			
	3.2.1.1	He/N_2 Turbine	Perform experimental approach for nitriding of potential PCS materials. Study effects of temperature on nitriding.	
	3.2.1.2	He/N_2 Compressor	R&D for the blades performance should be required in order to attain higher efficiency.	
	3.2.1.3	Generator and Electrical Equipment		Generator and electrical equipment is proven technology.

Table 4-1 continued (DDN List Based on AREVA's PCDSR)

Section	AREVA DDN Number	DDN Title	Description	Notes
	3.2.1.4	He/N_2 Cycle Control and Ducting	Propose to perform experimental approach for nitriding of potential PCS materials. Study effects of temperature on nitriding.	
3.2.2	**HRSG**			
	3.2.2.1	HRSG	Optimize system to determine the optimal pinch-point.	
3.2.3	**Steam Cycle**			
	3.2.3.1	Steam cycle	Not used.	Steam cycle subsystem is proven technology.
3.3	**Other Systems and Subsystems**			
	3.3.1.0	Helium Purification System	Selection and qualification of appropriate charcoal (during commissioning phase). Size various components for the desired flow rates.	
	3.3.2.0	Shutdown Cooling System.	Not used.	There are no critical R&D issues related to this system.
	3.3.3.0	Fuel Handling System	The Fuel Server system needs to be designed based on the current system concept. Key activities should include: - Mechanical design of the shield enclosure. - Design of the robotic fuel cart. - Development of the control software.	The Fuel Server System has been described only as a design concept at this point. Testing of the Fuel Server, beyond initial component testing, should be included in the testing program developed for the complete Fuel Handling System.

Table 4-1 continued (DDN List Based on AREVA's PCDSR)

Section	AREVA DDN Number	DDN Title	Description	Notes
	3.3.4.0	RCCS	Characterization of the heat transfer characteristics of the anticipated or proposed surface treatments for the reactor vessel and the panel heat exchanger will need to be accomplished. A large scale (e.g., representative height) demonstration of the capability of the RCCS to release the decay heat for the reactor may be beneficial.	Use of an uninsulated reactor vessel coupled with water-cooled panels as a core cooling mechanism for accident conditions has not been fully demonstrated. Basic physics of conduction cooldown heat transfer to RCCS and RCCS operation are straightforward. Separate effects tests provide direct path to critical data (e.g., surface emissivities). AREVA does not have a strong position on need for large scale test. While separate effects testing provides most precise information on critical parameters, large scale integrated testing may provide convincing confirmation for regulators. Licensing may be easier if large scale test is performed.
	3.3.5.0	Instrumentation	Examples of R&D which might be envisioned: - Neutron flux detectors – Some R&D and qualification efforts may be desirable to select detector technology and verify adequate sensitivity and lifetime. - Temperature Measurements – Standard thermocouples used in nuclear plants today are capable of measuring operating temperatures up to 1200ºC. Monitoring accident conditions may require the use of Pt-Rh thermocouples for operation at higher temperatures. These types of thermocouples are not used today and limited data about their reliability in nuclear environments exists. R&D may be needed to qualify Pt-Rh thermocouples for use in the NGNP, particularly if measurement of temperatures within the core is desired. Qualification testing is required in helium at expected normal and off-normal pressures, temperatures, flows and moisture levels. Further needs should arise together with the definition of the monitoring strategy.	NGNP will be a test bed for testing and validating HTR technology. Therefore, NGNP will include additional instrumentation beyond that required for normal operation in a commercial plant. Specific FOAK instrumentation will be required, and special instrumentation to support future HTR technology development missions may also be anticipated. For example, specific instrumentation might be required for operation at high temperature. The detail of this instrumentation (in particular the operating conditions) will be a function of the type of testing and experiments envisioned and will depend also on the monitoring strategy.

Table 4-1 continued (DDN List Based on AREVA's PCDSR)

Section	AREVA DDN Number	DDN Title	Description	Notes
4	**Computer Codes, Methods Development and Qualification**			
4.1	**Code Development**			
4.1.1	**Neutronics**			
	4.1.1.1	CABERNET (=NEPHTYS/STAR-CD)	Enhancement of capabilities for the calculation of transient analyses.	This is a coupled neutronics/TH code system.
	4.1.1.2	NEPHTYS		
4.1.2	**Thermal-Hydraulic**			
	4.1.2.1	RELAP5-3D	Several areas with regard to both modeling and validation are identified in the report INEEL/EXT-04-02293. Validation beyond that identified in INEEL/EXT-04-02293 and consistent with that planned for MANTA should be pursued. The INL has recognized a need to couple Computation Fluid Dynamics models to RELAP5-3D. Currently, RELAP5-3D is capable of coupling to the FLUENT CFD code. If the role of RELAP5-3D expands, there may be value to the project coupling the CFD code STAR-CD with RELAP5-3D to best utilize our investment in our STAR-CD models for the VHTR.	Reactor system analysis code. Unique capability to model water ingress. Unique capability to interface with other computation tools.
	4.1.2.2	STAR-CD	Develop graphite oxidation model for air ingress transients on reactor internal structures.	
4.1.3	**Fuel**			
	4.1.3.1	ATLAS	Improve the diffusion and the coatings corrosion modeling. Coated particle irradiation at relevant operating conditions (burnup, temperature, fluence). Heat-up experiment of irradiated fuel particles. Develop UCO models.	

Table 4-1 continued (DDN List Based on AREVA's PCDSR)

Section	AREVA DDN Number	DDN Title	Description	Notes
4.1.4	**Other Codes**			
	4.1.4.1	FP Transport	Models for: - The assessment of product activation in the primary circuit (in particular tritium and 14C). - Radio-contaminants distribution in the primary circuit, making distinction between circulating activity, plated out / deposited activity and purification system, during both normal operation and accidental situations. - Radio-contaminants releases outside the primary pressure boundary. - Radio-contaminants releases in the environment for accidental situations. Experimental work required for model qualification and for the actual qualification effort. Recommended to develop a mechanical analysis code for the NHS.	
	4.1.4.2	Structure Analysis	Introduction in structural mechanics codes of specific constitutive laws for HTR material (graphite, visco-plastic behavior of Ni base alloys): completing the experimental databases and developing numerical models. Seismic behavior of a block type core: development of a block type core modeling and experimental determination of input data for the model through tests on a vibration table. Fluid structure interaction and flow induced vibrations. LBB methodology for gas cooled reactors.	The proposed safety approach excludes the vessel rupture and thus relies on a leak-before-break (LBB) approach that has not been established for gas cooled reactors yet.

Table 4-1 continued (DDN List Based on AREVA's PCDSR)

Section	AREVA DDN Number	DDN Title	Description	Notes
4.2	**Code Qualification**			
4.2.1	**Neutronics**			
	4.2.1.1	CABERNET (=NEPHTYS/STAR-CD)	Experimental data of coupled power and temperature distributions obtained on representative fuel assembly geometry. If not achievable before NGNP: - Partial qualification data (e.g. burn-up measurements on fuel columns after irradiation in HTTR, which can provide a code/experiment comparison on the axial power distribution on a cycle, certainly different with and without temperature feedback). - Additional power margins will be necessary for initial operation of NGNP, to account for the uncertainty on the coupled neutronics-thermo-fluid dynamics calculation. - Need to provide in-core measurements of power and temperature distributions in NGNP for qualification of coupled calculations and therefore for allowing reaching nominal power. - R&D needs for developing appropriate sensors for in-core measurements (never performed in HTRs).	Coupled neutronics/TH code. This code qualification can be performed during commissioning phase.
	4.2.1.2	MCNP	Dedicated critical experiments, with an asymptotic spectrum representative of the expected prismatic fuel assembly and core, with full access to pin-by-pin power distributions, and control rod and burnable poisons worths are needed. Experimental data of neutronic characteristics (spectrum, fission and capture rates) at the interface between a prismatic fuel assembly and a graphite reflector assembly.	Data from FSV and HTTR first criticality testing can be applicable to MCNP code qualification.
	4.2.1.3	MONTEBURNS	Experimental results of fuel irradiation experiments (compacts or pebbles) at representative burnup, temperature and fluence. Experimental results of decay heat at short term (<100 hours) for representative fuel composition and burnup.	

Table 4-1 continued (DDN List Based on AREVA's PCDSR)

Section	AREVA DDN Number	DDN Title	Description	Notes
	4.2.1.4	NEPHTYS	Approach for qualification currently consists of comparisons against Monte-Carlo reference calculations and benchmarking against the few available experimental data (FSV, HTTR). Thus new dedicated critical experiments, with an asymptotic spectrum representative of the expected prismatic fuel assembly and core, with full access to pin-by-pin power distributions, and control rod and burnable poisons worths are needed. Experimental data of neutronic characteristics (spectrum, fission and capture rates) at the interface between a prismatic fuel assembly and a graphite reflector assembly.	
4.2.2	**Thermal-Hydraulic**			
	4.2.2.1	MANTA	Additional benchmarks against experimental data are required. Some facilities which could provide valuable data have been identified (non exhaustive): namely, HTTR reactor in Japan, HTR10 reactor in China, SBL-30 loop in the USA (SNL). The qualification of component models will follow from the qualification tests of the components. The core model qualification follows from comparison with other codes and experimental results (detailed core calculation).	Global validation of MANTA currently consists of code-to-code benchmarking: comparisons with CATHARE from CEA (France), LEDA from EDF (France), ASURA from MHI (Japan), REALY2 from GA (USA) and RELAP5-3D from INL (USA) have already shown good agreement. Qualification against experimental data is also progressing (EVO loop, HE-FUS3 loop and PBMM).
	4.2.2.2	STAR-CD	Qualification of conduction cooldown models on representative geometry, materials and temperature. Qualification of turbulence and mixing on representative mock-ups in critical areas (lower and upper reactor plena, hot gas duct, core bypass IHX collectors…). Qualification of oxidation models with selected graphite grades in representative operating conditions.	Several predecessor tests performed with different graphite grades can be applied for STAR-CD qualification.

Table 4-1 continued (DDN List Based on AREVA's PCDSR)

Section	AREVA DDN Number	DDN Title	Description	Notes
4.2.3	**Fuel**			
	4.2.3.1	ATLAS	Coated particle irradiation at relevant operating conditions (burnup, temperature, fluence); heat-up experiment of irradiated fuel particles.	

Table 4-2: DDN List Based on Selected Reference Concept (Low Temperature Conventional Steam Cycle)

Section	AREVA DDN Number	DDN Title	Description	Notes
1	**Fuel**			
1.1	**Fuel Development**			
1.1.1	**Kernel**			
	1.1.1.1	Kernel Materials	Develop advanced carbon source for UCO kernel production. Test materials in pilot-facility fabricating UCO kernels.	
	1.1.1.2	Kernel Manufacturing	Develop advanced kernel wash and dry system to effectively increase throughput of kernel line with no degradation in kernel quality. Develop enhanced sintering for either UCO (large fluidized bed sintering) or UO2 (static bed sintering) with a focus on increased throughput and reduced cost.	
1.1.2	**Coating**			
	1.1.2.1	Coating Materials	NA	R&D need of coating materials qualification has been included in 1.1.3.1 and 1.1.3.2.
	1.1.2.2	Coating Manufacturing	Investigate largest coating batches size capable in existing 6" coating retort. Determine economic feasibility of using a 6" retort for production.	Acceptability of coatings should initially be based on physical characteristics of the coatings after manufacture. Should a larger coater be required, plan on implementing the R&D of that coater as part of the facility expansion for production.
1.1.3	**Compact**			
	1.1.3.1	Compact Materials	Select graphitic matrix, resin, etc. to produce thermosetting compacts. Demonstrate performance of compacts under normal and off-normal accident conditions.	

Table 4-2 continued (DDN List Based on Selected Reference Concept)

Section	AREVA DDN Number	DDN Title	Description	Notes
	1.1.3.2	Compact Manufacturing	Establish compact manufacturing capabilities in the US based on the AREVA process. Develop (or confirm) compact pressures and temperatures to minimize fuel damage. Develop heat treat process to ensure complete graphitization of the matrix material. Perform irradiation tests on compacts to demonstrate performance for nominal and off-nominal operating conditions. Recommend expansion of BWXT fuel line for compacts.	
1.1.4	**Fuel Mass Production**			
	1.1.4.1	Fuel Mass Production	R&D should focus on areas where product uniformity and quality are most at jeopardy. Initial R&D should focus on kernel wash & dry, sintering, coating (assuming larger than 6" coater required), compact matrix formulation, and compact fabrication. Irradiation testing will be required to confirm fuel performance matches performance from the laboratory/pilot facilities. Some chemical processing areas or the process will require significant scale-up to meet production demands.	
1.2	**Fuel Qualification**			
	1.2.1.0	Quality Control Methods	Develop highly reliable instrumentation and data acquisition software to ensure fuel particle quality is built into the fuel. Capture essential data for fuel certification.	

Table 4-2 continued (DDN List Based on Selected Reference Concept)

Section	AREVA DDN Number	DDN Title	Description	Notes
	1.2.2.0	Inspection Techniques	Develop QC inspection techniques that directly relate to irradiation performance. Develop techniques for large-scale production capabilities that minimize the quantity of materials that require destructive evaluation to ensure statistically acceptable fuel is produced. Irradiation testing of the compacts to attempt to relate as-measured attributes actually correlated to performance would be necessary to ensure the correct attributes are being measured and characterized.	Techniques to be investigated could be: micro focus x-ray of particles (dimensional inspection of particle layers), mercury porosymetry (buffer density), sink-float (IPyC, SiC, and OPyC density), anisotropy measurements of the IPyC and OPyC layers, leach-burn-leach test or weak irradiation techniques (particle leak tightness), etc. Many QC techniques need to be developed with mass production in mind.
2	**Materials Development and Qualification**			
2.1	**All Materials**			
	2.1.1.0	Tribology	Perform tribology tests on expected couples of materials in representative HTR conditions.	This type of tests requires dedicated facilities.
2.2	**Metallic Materials**			
2.2.1	**RPV High Temperature Materials**			
	2.2.1.1	Not used.		
2.2.2	**IHX Materials**			
	2.2.2.1	Not used.		

Table 4-2 continued (DDN List Based on Selected Reference Concept)

Section	AREVA DDN Number	DDN Title	Description	Notes
2.2.3	**Reactor Internal Materials**			
	2.2.3.1	Reactor Internal Materials	For Alloy 800H and Mod 9Cr1Mo: - Emissivity measurement under likely representative state of surface (as machined and oxidized after machining). - Corrosion behavior under representative primary helium environment. For extension of 800H coverage in ASME III-NH the following items are needed: - Long term tests at temperature higher than 760°C - Extension of allowables to cover 60 years lifetime.	Efforts in progress to extend coverage of alloy 800H up to ASME III-NH. Modified 9Cr1Mo is also a candidate if temperatures are kept below 750°C. Needs for mod 9Cr1Mo are already covered in the R&D needs for the vessel system.
2.2.4	**RPV Low Temperature Materials**			
	2.2.4.1	RPV Low Temperature Material	Study: - Effect of irradiation. - Corrosion in helium environment. - Emissivity	

Table 4-2 continued (DDN List Based on Selected Reference Concept)

Section	AREVA DDN Number	DDN Title	Description	Notes
2.3	**Ceramic Materials**			
2.3.1	**Control Rods**			
	2.3.1.1	Control Rod Sheaths	Study: - Thermal-physical properties (K, CTE, Cp). - Mechanical properties including multiaxial strength. - Fracture properties. - Fatigue properties. - Behavior under oxidized atmosphere and oxidation effects on properties. - Codification. - Materials envisioned so far are C/C or C/SiC composites. - Test and irradiate component mock-ups (e.g. sample joints)	
	2.3.1.2	Control Rods (solid ceramic control rod without sheaths)	Study: - Thermal-physical properties (K, CTE, Cp). - Mechanical properties including multiaxial strength. - Fracture properties. - Fatigue properties. - Behavior under oxidized atmosphere and oxidation effects on properties. - Codification. - Materials envisioned so far are C/C or C/SiC composites. - Test and irradiate component mock-ups (e.g. sample joints)	

Table 4-2 continued (DDN List Based on Selected Reference Concept)

Section	AREVA DDN Number	DDN Title	Description	Notes
2.3.2	**Upper Core Restraints**			
	2.3.2.1	Upper Core Restraints	Study: - Thermal-physical properties (K, CTE, Cp). - Mechanical properties including multiaxial strength. - Fracture properties. - Fatigue properties. - Behavior under oxidized atmosphere and oxidation effects on properties. - Codification. - Materials envisioned so far are C/C or C/SiC composites. - Test and irradiate component mock-ups (e.g. sample joints)	
2.3.3	**Top Plenum Shroud**			
	2.3.3.1	Not used.		
2.3.4	**Hot Gas Duct Liners**			
	2.3.4.1	Not used.		
2.3.5	**Core Support Insulation Blocks**			
	2.3.5.1	Not used.		
2.3.6	**Ceramic Insulation**			
	2.3.6.1	Ceramic Insulation	Study: - Thermal-physical properties (K, CTE, Cp). - Behavior under oxidation.	

Table 4-2 continued (DDN List Based on Selected Reference Concept)

Section	AREVA DDN Number	DDN Title	Description	Notes
2.4	**Graphite Materials**			
	2.4.1.0	Graphite	Study: - Thermal-physical properties (K, CTE, Cp, emissivity). - Mechanical properties including multiaxial strength. - Fracture properties. - Fatigue properties. - Irradiation effects on properties including irradiation induced dimensional change, irradiation induced creep, changes in thermal conductivity, and annealing out of thermal conductivity changes at high temperature. - Behavior under oxidized atmosphere including oxidation effects on properties. - Tribology. - Codification including fracture models. - Graphite oxidation from water ingress. - Graphite oxidation from air ingress. Develop ASME and ASTM codes and standards for graphite essential for timely application of graphite for NGNP reactor. Graphite qualification.	Grades presently under consideration are PCEA, NBG17 and/or NBG18.

Table 4-2 continued (DDN List Based on Selected Reference Concept)

Section	AREVA DDN Number	DDN Title	Description	Notes
3	**Components Testing**			
3.1	**Helium Loop**			
	3.1.1.0	Primary Gas Circulators	Component qualification tests: - Air tests of the impeller (at scale 0.2 to 0.4). - Helium tests of Magnetic and Catcher bearings. - Tests of the circulator shutoff valve. - Integrated tests near full-scale of the whole machine should be required on a large He loop, in air at the manufacturer's site or during the NGNP commissioning phase.	
	3.1.2.0	Not used.		
	3.1.3.0	Not used.		
	3.1.4.0	Not used.		

Table 4-2 continued (DDN List Based on Selected Reference Concept)

Section	AREVA DDN Number	DDN Title	Description	Notes
	3.1.5.0	Hot Gas Ducts	Demonstrate that no significant hot streaks should be expected with the V-shaped metallic concept. Qualification should be performed in 3 steps: - Elementary tests to characterize the fiber conditions, assembly techniques, spacers, etc. - Tests on a small mock-up in a test facility of about 1 MWt or less to validate the fiber specification and the ceramic spacer specification (if possible in He). - Tests on a full scale mock-up in a big test facility in He (around 10 MW). Test should at least cover: - Depressurization tests. - Pressure loss, heat loss, temperature of the support tube (in He conditions). - Leak tightness tests of the connection areas. - Fatigue and creep-fatigue tests (e.g. bellows, V-shape spacers, etc).	The reference design for the primary and secondary hot gas duct is the V-shaped metallic concept. The ceramic concept is envisioned as a fall back option for the primary hot gas duct. In the first stages of the design, tests should cover both the metallic and ceramic design (pending the confirmation of the feasibility of the metallic design).
	3.1.6.0	Steam Generator	Test during commissioning stage of: thermal-hydraulic performance, flow induced-vibration, and flow stability and controllability of water and steam system. Test integrity of dissimilar material welding joint in tubes (alloy 800H/ 2.25 Cr - 1 Mo).	
3.2	**PCS**			
3.2.1	**Brayton Cycle**			
	3.2.1.1	Not used.		
	3.2.1.2	Not used.		
	3.2.1.3	Not used.		
	3.2.1.4	Not used.		

Table 4-2 continued (DDN List Based on Selected Reference Concept)

Section	AREVA DDN Number	DDN Title	Description	Notes
3.2.2	**HRSG**			
	3.2.2.1	Not used.		
3.2.3	**Steam Cycle**			
	3.2.3.1	Not used.		
3.2.4	**Process Steam Supply System**			
	3.2.4.1	Reboiler	TBD - place holder in case future testing is required	
3.3	**Other Systems and Subsystems**			
	3.3.1.0	Helium Purification System	Selection and qualification of appropriate charcoal (during commissioning phase). Size various components for the desired flow rates.	
	3.3.2.0	Not used.		
	3.3.3.0	Fuel Handling System	The Fuel Server system needs to be designed based on the current system concept. Key activities should include: - Mechanical design of the shield enclosure. - Design of the robotic fuel cart. - Development of the control software.	The Fuel Server System has been described only as a design concept at this point. Testing of the Fuel Server, beyond initial component testing, should be included in the testing program developed for the complete Fuel Handling System.
	3.3.4.0	RCCS	Characterization of the heat transfer characteristics of the anticipated or proposed surface treatments for the reactor vessel and the panel heat exchanger will need to be accomplished. A large scale (e.g., representative height) demonstration of the capability of the RCCS to release the decay heat for the reactor may be beneficial.	Use of an uninsulated reactor vessel coupled with water-cooled panels as a core cooling mechanism for accident conditions has not been fully demonstrated. Basic physics of conduction cooldown heat transfer to RCCS and RCCS operation are straightforward. Separate effects tests provide direct path to critical data (e.g., surface emissivities). AREVA does not have a strong position on need for large scale test. While separate effects testing provides most precise information on critical parameters, large scale integrated testing may provide convincing confirmation for regulators. Licensing may be easier if large scale test is performed.

Table 4-2 continued (DDN List Based on Selected Reference Concept)

Section	AREVA DDN Number	DDN Title	Description	Notes
	3.3.5.0	Instrumentation	Examples of R&D which might be envisioned: - Neutron flux detectors – Some R&D and qualification efforts may be desirable to select detector technology and verify adequate sensitivity and lifetime. - Temperature Measurements – Standard thermocouples used in nuclear plants today are capable of measuring operating temperatures up to 1200ºC. Monitoring accident conditions may require the use of Pt-Rh thermocouples for operation at higher temperatures. These types of thermocouples are not used today and limited data about their reliability in nuclear environments exists. R&D may be needed to qualify Pt-Rh thermocouples for use in the NGNP, particularly if measurement of temperatures within the core is desired. Qualification testing is required in helium at expected normal and off-normal pressures, temperatures, flows and moisture levels. Further needs should arise together with the definition of the monitoring strategy.	NGNP will be a test bed for testing and validating HTR technology. Therefore, NGNP will include additional instrumentation beyond that required for normal operation in a commercial plant. Specific FOAK instrumentation will be required, and special instrumentation to support future HTR technology development missions may also be anticipated. For example, specific instrumentation might be required for operation at high temperature. The detail of this instrumentation (in particular the operating conditions) will be a function of the type of testing and experiments envisioned and will depend also on the monitoring strategy.
4	**Computer Codes, Methods Development and Qualification**			
4.1	**Code Development**			
4.1.1	**Neutronics**			
	4.1.1.1	CABERNET (=NEPHTYS/STAR-CD)	Enhancement of capabilities for the calculation of transient analyses.	This is a coupled neutronics/TH code.
	4.1.1.2	NEPHTYS		

Table 4-2 continued (DDN List Based on Selected Reference Concept)

Section	AREVA DDN Number	DDN Title	Description	Notes
4.1.2	**Thermal-Hydraulic**			
	4.1.2.1	RELAP5-3D	Several areas with regard to both modeling and validation are identified in the report INEEL/EXT-04-02293. Validation beyond that identified in INEEL/EXT-04-02293 and consistent with that planned for MANTA should be pursued. The INL has recognized a need to couple Computation Fluid Dynamics models to RELAP5-3D. Currently, RELAP5-3D is capable of coupling to the FLUENT CFD code. If the role of RELAP5-3D expands, there may be value to the project coupling the CFD code STAR-CD with RELAP5-3D to best utilize our investment in our STAR-CD models for the VHTR.	Reactor system analysis code. Unique capability to model: a) water ingress and b) air ingress. Unique capability to interface with other computation tools.
	4.1.2.2	STAR-CD	Develop graphite oxidation model for water and air ingress transients on reactor internal structures.	Mass transfer, reaction kinetics, air ingress, water ingress
4.1.3	**Fuel**			
	4.1.3.1	ATLAS	Improve the diffusion and the coatings corrosion modeling. Coated particle irradiation at relevant operating conditions (burnup, temperature, fluence). Heat-up experiment of irradiated fuel particles. Develop UCO models.	

Table 4-2 continued (DDN List Based on Selected Reference Concept)

Section	AREVA DDN Number	DDN Title	Description	Notes
4.1.4	**Other Codes**			
	4.1.4.1	FP Transport	Models for: - The assessment of product activation in the primary circuit (in particular tritium and 14C). - Investigation of tritium migration and control in SG and secondary water loops. - Radio-contaminants distribution in the primary circuit, making distinction between circulating activity, plated out / deposited activity and purification system, during both normal operation and accidental situations. - Radio-contaminants releases outside the primary pressure boundary. - Radio-contaminants releases in the environment for accidental situations. - Fuel hydrolysis. - Fission product wash-off. Experimental work required for model qualification and for the actual qualification effort. Recommended to develop a mechanical analysis code for the NHS.	
	4.1.4.2	Structure Analysis	Introduction in structural mechanics codes of specific constitutive laws for HTR material (graphite, visco-plastic behavior of Ni base alloys): completing the experimental databases and developing numerical models. Seismic behavior of a block type core: development of a block type core modeling and experimental determination of input data for the model through tests on a vibration table. Fluid structure interaction and flow induced vibrations. LBB methodology for gas cooled reactors.	The proposed safety approach excludes the vessel rupture and thus relies on a leak-before-break (LBB) approach that has not been established for gas cooled reactors yet.

Table 4-2 continued (DDN List Based on Selected Reference Concept)

Section	AREVA DDN Number	DDN Title	Description	Notes
	4.1.4.3	Chemistry Effects Of Steam/Water	Need data to determine necessity and preferential approach to any modeling effort. Effects of water ingress from small and large SG breaks on graphite oxidation, pressure increase, fission product mobilization, fuel hydrolysis.	
4.2	**Code Qualification**			
4.2.1	**Neutronics**			
	4.2.1.1	CABERNET (=NEPHTYS/STAR-CD)	Experimental data of coupled power and temperature distributions obtained on representative fuel assembly geometry. If not achievable before NGNP: - Partial qualification data (e.g. burn-up measurements on fuel columns after irradiation in HTTR, which can provide a code/experiment comparison on the axial power distribution on a cycle, certainly different with and without temperature feedback). - Additional power margins will be necessary for initial operation of NGNP, to account for the uncertainty on the coupled neutronics-thermo-fluid dynamics calculation. - Need to provide in-core measurements of power and temperature distributions in NGNP for qualification of coupled calculations and therefore for allowing reaching nominal power. - R&D needs for developing appropriate sensors for in-core measurements (never performed in HTRs).	Coupled neutronics/TH code. This code qualification can be performed during commissioning phase.

Table 4-2 continued (DDN List Based on Selected Reference Concept)

Section	AREVA DDN Number	DDN Title	Description	Notes
	4.2.1.2	MCNP	Dedicated critical experiments, with an asymptotic spectrum representative of the expected prismatic fuel assembly and core, with full access to pin-by-pin power distributions, and control rod and burnable poisons worths are needed. Experimental data of neutronic characteristics (spectrum, fission and capture rates) at the interface between a prismatic fuel assembly and a graphite reflector assembly.	Data from FSV and HTTR first criticality testing can be applicable to MCNP code qualification.
	4.2.1.3	MONTEBURNS	Experimental results of fuel irradiation experiments (compacts or pebbles) at representative burnup, temperature and fluence. Experimental results of decay heat at short term (<100 hours) for representative fuel composition and burnup.	
	4.2.1.4	NEPHTYS	Benchmarking for annular HTR core geometries. Approach for qualification currently consists of comparisons against Monte-Carlo reference calculations and benchmarking against the few available experimental data (FSV, HTTR). Thus new dedicated critical experiments, with an asymptotic spectrum representative of the expected prismatic fuel assembly and core, with full access to pin-by-pin power distributions, and control rod and burnable poisons worths are needed. Experimental data of neutronic characteristics (spectrum, fission and capture rates) at the interface between a prismatic fuel assembly and a graphite reflector assembly.	

Table 4-2 continued (DDN List Based on Selected Reference Concept)

Section	AREVA DDN Number	DDN Title	Description	Notes
4.2.2	**Thermal-Hydraulic**			
	4.2.2.1	MANTA	Additional benchmarks against experimental data are required. Some facilities which could provide valuable data have been identified (non exhaustive): namely, HTTR reactor in Japan, HTR10 reactor in China, SBL-30 loop in the USA (SNL). The qualification of component models will follow from the qualification tests of the components. The core model qualification follows from comparison with other codes and experimental results (detailed core calculation).	Global validation of MANTA currently consists of code-to-code benchmarking: comparisons with CATHARE from CEA (France), LEDA from EDF (France), ASURA from MHI (Japan), REALY2 from GA (USA) and RELAP5-3D from INL (USA) have already shown good agreement. Qualification against experimental data is also progressing (EVO loop, HE-FUS3 loop and PBMM).
	4.2.2.2	STAR-CD	Qualification of conduction cooldown models on representative geometry, materials and temperature. Qualification of turbulence and mixing on representative mock-ups in critical areas (lower and upper reactor plena, hot gas duct, core bypass). Qualification of oxidation models with selected graphite grades in representative operating conditions.	Several predecessor tests performed with different graphite grades can be applied for STAR-CD qualification.
4.2.3	**Fuel**			
	4.2.3.1	ATLAS	Coated particle irradiation at relevant operating conditions (burnup, temperature, fluence); heat-up experiment of irradiated fuel particles.	

Table 4-3: Accident and Thermal Fluids Analysis PIRT-to-DDN Reconciliation

AREVA PIRT ID No.	Issue (Phenomena, Process, etc)	Description	Importance	Knowledge	Associated AREVA DDN Number	Rationale
Normal Operation (20-100% power) PIRT Chart						
V2-2.1-1	Core coolant bypass flow	Determines active core cooling. Affects Tmax, fuel.	H	L	2.4.1.0	This issue will be resolved during normal design work. Due to gap uncertainties, a range of gaps will have to be established for the beginning of end of life of the fuel. A range of flows will be subsequently obtained and core analysis will be performed over these ranges. The required dimensional change for graphite will be found as part of DDN 2.4.1.0.
V2-2.1-2	Core flow distribution, flow in active core	Determines fuel operating temperatures. Assumes known bypass flows.	H	M	N/A	This issue will be resolved during normal design work.
V2-2.1-3	Core flow distribution changes due to temperature gradients	Some effect on fuel operating temperatures. Active core flow. Large delta T from inlet to outlet. Gradients different from LWRs.	M	M	N/A	The existing methods are adequate. The graphite dimensional change data will be addressed in the appropriate graphite DDNs.
V2-2.1-4	Core flow distribution changes due to graphite irradiation	Some effect on fuel operating temperatures.	M	L	N/A	The existing methods are adequate. The graphite dimensional change data will be addressed in the appropriate graphite DDNs.

Table 4-3 continued (Accident and Thermal Fluids Analysis)

AREVA PIRT ID No.	Issue (Phenomena, Process, etc)	Description	Importance	Knowledge	Associated AREVA DDN Number	Rationale
V2-2.1-5	Core flow distribution changes due to core barrel geometry changes	Some effect on fuel operating temperatures. Wouldn't apply to case where inlet flow enters through reflectors.	M	M	N/A	This issue will be resolved during normal design work.
V2-2.1-6	Core flow distribution due to core block stability (prismatic)	Problem at Fort St. Vrain.	M	M	N/A	Core fluctuation analysis will be performed as part of the normal design process.
V2-2.1-7	Pebble bed core bridging	Problem at AVR. Happened at bottom of core at beginning of life.	M	M	N/A	This issue concerns pebble bed designs and is not relevant to the selected NGNP concept.
V2-2.1-8	Pebble bed core wall interface effects on bypass flow	Diversion of some core cooling flow. Number of pebbles across impacts interface effects.	H	L	N/A	This issue concerns pebble bed designs and is not relevant to the selected NGNP concept.
V2-2.1-9	Coolant properties - viscosity and friction effects	Determines core temperatures.	H	H	N/A	This issue is covered by existing data. As pointed out by the panel, helium properties are well-known and flow friction correlations are standard for prismatic core designs.
V2-2.1-10	Coolant heat transfer correlations	Determines core temperatures.	H	H for PMR M for PBR	N/A	This issue is covered by existing data. There is high knowledge base for prismatic core design on this issue.

Table 4-3 continued (Accident and Thermal Fluids Analysis)

AREVA PIRT ID No.	Issue (Phenomena, Process, etc)	Description	Importance	Knowledge	Associated AREVA DDN Number	Rationale
V2-2.1-11	Core inlet flow distribution	Important for core cooling calculations.	M	M	N/A	This issue will be resolved during normal design work. Core flow distribution is dominated by pressure drop of core coolant passages and bypass flow through core gaps. Calculations are performed for a number of bounding configurations to determine anticipated range of flow distributions as a function of operating conditions and core lifetime.

Table 4-3 continued (Accident and Thermal Fluids Analysis)

AREVA PIRT ID No.	Issue (Phenomena, Process, etc)	Description	Importance	Knowledge	Associated AREVA DDN Number	Rationale
V2-2.1-12	Thermal fluid mixing from separate loops	Important for core cooling calculations. Very design-dependent.	M	M	N/A	This issue will be resolved during normal design work. Detailed analyses using CFD and other tools as appropriate are performed for all permissible flow regimes. Specifications will be established to define allowable operating mismatch between loops and cold return temperature. In general, small variations are expected, and long mixing lengths through complex geometries will provide significant mixing before core inlet plenum is reached. Therefore, as stated in PIRT, importance is only moderate, and knowledge level is consistent with this.
V2-2.1-13	Outlet plenum flow distribution	Affects mixing. Thermal stresses in plenum and down stream, outlet pressure distribution.	H	L	4.2.2.2	This issue will be resolved during normal design work and is supported by DDN 4.2.2.2.
V2-2.1-14	Pebble flow	Affects core maximum temperatures, pebble burnup. Problem at THTR (pebbles with higher peaking factors flowed faster in the middle).	H	M	N/A	This issue concerns pebble bed designs and is not relevant to the selected NGNP concept.

Table 4-3 continued (Accident and Thermal Fluids Analysis)

AREVA PIRT ID No.	Issue (Phenomena, Process, etc)	Description	Importance	Knowledge	Associated AREVA DDN Number	Rationale
V2-2.1-15	Effective core thermal conductivity	Affects core maximum temperatures during operation.	L	M	N/A	Convection heat transfer dominates at rated flow. This issue is of low importance. No further data is needed.
V2-2.1-16	Effective fuel element thermal conductivity	Affects core maximum temperatures during operation.	H	M	1.3.2.0	This issue requires a new DDN.
V2-2.1-17	Core specific heat	Affects transients.	M	H	N/A	This issue is covered by existing data. There is high knowledge base on this issue.
V2-2.1-18	Side reflector - core barrel - vessel heat transfer	Affects residual heat losses, vessel temperatures (radiation, convection, conduction).	M	M	N/A	This issue will be resolved in normal design work. Heat transfer can easily be calculated in long skinny cores.
V2-2.1-19	RCCS heat removal	Affects residual heat losses, vessel temperatures.	H	M	3.3.4.0	This issue will be resolved during normal design work and is supported by DDN 3.3.4.0.
V2-2.1-20	Shutdown cooling system startup transients during core heatup	Can affect component thermal stresses; dependent on design and operational details.	H	M	N/A	This issue will be resolved during normal design work.
V2-2.1-21	Reactivity-Temperature feedback coefficients	Affects core transient behavior.	H	L	4.1.1.1 4.2.1.1	This issue is covered by DDN 4.1.1.1 and 4.2.1.1.

Table 4-3 continued (Accident and Thermal Fluids Analysis)

AREVA PIRT ID No.	Issue (Phenomena, Process, etc)	Description	Importance	Knowledge	Associated AREVA DDN Number	Rationale
V2-2.1-23	Xenon buildup and oscillation	Affects core transient behavior.	M	M	N/A	As described by the panel, understanding of xenon oscillations is well-known and stability can be assured with proper calculations. This issue will be resolved in normal design work.
V2-2.1-24	Fuel performance modeling	Fuel type dependent. Crucial to design and siting. Depends on performance envelope, QA/QC, ...	H	L	4.1.3.1 4.2.3.1	This issue is covered by DDN 4.1.3.1 and 4.2.3.1.
V2-2.1-25	Ag-110m release and plateout	Affects maintenance dose. May be dependent upon fuel design, columnar grains vs. pearl grains. Will be dependent upon fuel temperature.	H	L	1.3.3.0	This issue requires a new DDN.
V2-2.1-26	Power and flux profiles (initial conditions for accidents)	Affects fuel potential for failures in accident conditions due to long-term exposures. For affecting conditions, see item #19.	H	M	4.2.1.1 – 4.2.1.4	This issue is covered by DDNs 4.2.1.1 through 4.2.1.4.
General LOFC PIRT Chart						
V2-2.2-1	Core thermal conductivity (effective)	Affects Tfuel,max (low values) and Tvessel,max (high values). Effective conductivity is a complex function of graphite temp and radiation terms.	H	M	2.4.1.0 4.2.2.2	This issue is covered by DDN 4.2.2.2 and DDN 2.4.1.0.
V2-2.2-2	Fuel element annealing (prismatic core)	End-of-life Tfuel maximum calculations sensitive to annealing calculations. Extent of annealing in given areas can be difficult to predict.	M	M	2.4.1.0	This issue is covered by DDN 2.4.1.0.
V2-2.2-3	Core specific heat function	Large core heat capacity gives slow accident response. Fuel property close to that of graphite.	H	H	N/A	There is high knowledge base on this issue and it is covered by existing data.

Table 4-3 continued (Accident and Thermal Fluids Analysis)

AREVA PIRT ID No.	Issue (Phenomena, Process, etc)	Description	Importance	Knowledge	Associated AREVA DDN Number	Rationale
V2-2.2-4	Vessel emissivity	T4 vessel to RCCS affects heat transfer process at accident temperatures.	H	M	2.2.4.1	This issue is covered by DDN 2.2.4.1.
V2-2.2-5	RCCS panel emissivity	Factor in the radiant heat transfer from vessel to RCCS	same as #4		3.3.4.0	This issue will be resolved during normal design work and is supported by DDN 3.3.4.0.
V2-2.2-6	Vessel to RCCS effective view factors	Determines space-dependent heat transfer; complex geometries involved.	H	M	3.3.4.0	This issue will be resolved during normal design work and is supported by DDN 3.3.4.0.
V2-2.2-7	Reactor vessel cavity air circulation and heat transfer	Affects upper cavity heating, assume controls inserted either through automatic or manual action relatively quickly.	H	L	3.3.4.0 4.2.2.2	This issue is covered by DDN 3.3.4.0 and 4.2.2.2.
V2-2.2-8	Reactor vessel cavity "gray gas" (participating media)	Can affect vessel temperatures and Tfuel,max.	M	M	N/A	This issue will be resolved as part of normal design work. Scoping calculations will be performed to assess the significance of this issue. Initial methods qualification will be performed using existing data on radiation through participating media. If need for additional information is identified, DDN 3.3.4.0 will be modified to explicitly include appropriate separate effects and/or integrated testing.

Table 4-3 continued (Accident and Thermal Fluids Analysis)

AREVA PIRT ID No.	Issue (Phenomena, Process, etc)	Description	Importance	Knowledge	Associated AREVA DDN Number	Rationale
V2-2.2-9	Reflectors: conductivity and annealing	Affects peak fuel and vessel temperatures.	H	M	2.4.1.0	This issue is covered by DDN 2.4.1.0.
V2-2.2-10	Core barrel emissivity	Affects peak fuel and vessel temperatures.	H	M	2.2.3.1	This issue is covered by DDN 2.2.3.1.
V2-2.2-11	Stored (Wigner) energy releases	Effects apply to low-temperature operation graphite reactors	L	H	N/A	This issue is covered by existing, established data. There is high knowledge base on stored energy releases.
V2-2.2-12	RCCS fouling on coolant side	Affects heat sink effectiveness. Deterioration can be measured on-line in some designs.	H	M	N/A	This issue will be resolved in normal design work.
V2-2.2-13	RCCS spatial heat loadings	Shifts in heat loadings can affect cooling effectiveness. Complex geometries involved.	H	M	3.3.4.0	This issue will be resolved in normal design work and supported by DDN 3.3.4.0.
V2-2.2-14	RCCS performance including failure of 1 of 2 channels	Affects cooling effectiveness (design). Complex geometries involved, differential expansion leads to support structure concerns.	H	M	N/A	This issue will be resolved in normal design work.
V2-2.2-15	RCCS failure of both channels; heat transfer from RCCS to concrete cavity wall - Concrete thermal response - Concrete degradation	Involves complex heat transfer to cavity walls.	H	M	N/A	This issue is expected to be BDBE. Conduction cooldown scoping analysis assuming failed RCCS will be performed as appropriate during normal design based on analysis rules and acceptance criteria appropriate for BDBE.
V2-2.2-16	RCCS panel damage from missiles	Complex phenomena involved.	Skip	Skip	N/A	This issue will be resolved in normal design work.

Table 4-3 continued (Accident and Thermal Fluids Analysis)

AREVA PIRT ID No.	Issue (Phenomena, Process, etc)	Description	Importance	Knowledge	Associated AREVA DDN Number	Rationale
V2-2.2-17	RCCS forced-to-natural circulation transitions (part of ID #14)	Complex phenomena (more so with water coolant). Crucial to function.	H	M	N/A	This issue is not relevant to the selected NGNP configuration. The RCCS design is always natural circulation.
V2-2.2-18	RCCS single phase boiling transitions (part of ID #14)	Complex phenomena. Crucial to function.	H	M	N/A	This issue will be resolved in normal design work.
V2-2.2-19	RCCS parallel channel interactions (part of ID #14)	Complex phenomena. Crucial to function.	H	M	N/A	This issue will be resolved in normal design work. Normal flow stability analyses will be performed for the RCCS.
V2-2.2-20	RCCS natural circulation in horizontal panel(s) (part of ID #14)	Complex phenomena (more so with water coolant). Crucial to function.	H	M	N/A	This issue is not relevant to the selected NGNP concept unless the horizontal panels referred to are the headers. In that case, the issue will be resolved during normal design work.
V2-2.2-21	Decay heat (temporal and spatial)	Time dependence and spatial distribution major factors in Tfuel,max estimate.	H	M	N/A	This issue will be resolved in normal design work.
Pressurized LOFC PIRT Chart						
V2-2.3-1	Inlet plenum stratification and plumes	Determines design of upper vessel head area insulation.	H	M	N/A	This issue will be resolved in normal design work. A combination of CFD and conventional plume analysis will be used to perform scoping analyses. This, combined with appropriate design margins, will be used to

Table 4-3 continued (Accident and Thermal Fluids Analysis)

AREVA PIRT ID No.	Issue (Phenomena, Process, etc)	Description	Importance	Knowledge	Associated AREVA DDN Number	Rationale
						address this design issue.
V2-2.3-2	Radiant heat transfer from top of core to upper vessel head	Determines design of upper vessel head area insulation, view factor models Also affected by core top surface temperatures.	H	M	N/A	This issue will be resolved in normal design work.
V2-2.3-3	RCCS spatial heat loadings	Major shifts in heat load to top of RCCS. Complex geometries involved.	H	M	3.3.4.0	This issue will be resolved in normal design work and supported by DDN 3.3.4.0.
V2-2.3-4	Core coolant flow distribution	Dominates core heat redistribution in P-LOFC. Involves low-flow correlations, flow reversals.	H	M	4.2.2.2	This issue is covered by DDN 4.2.2.2.
V2-2.3-5	Core coolant (channel) by-pass flow	Involves low-flow correlations, flow reversals.	H	M	4.2.2.2	This issue is covered by DDN 4.2.2.2.
V2-2.3-6	Coolant flow friction/viscosity effects	Significant effects on plumes. Models for very low and reverse flows.	H	M	4.2.2.2	This issue is covered by DDN 4.2.2.2.
V2-2.3-7	Impacts (thermal shock) in SCS due to startup flow transient	Thermal transients for P-LOFCs more pronounced.	M	M	N/A	As mentioned by the panel, the models required are well-known. This issue will therefore be resolved in normal design work.
Depressurized LOFC PIRT Chart						
V2-2.4-1	Core effective thermal conductivity	Affects Tfuel,max for D-LOFC.	H	M	2.4.1.0 4.2.2.2	This issue is covered by DDN 4.2.2.2 and DDN 2.4.1.0.

Table 4-3 continued (Accident and Thermal Fluids Analysis)

AREVA PIRT ID No.	Issue (Phenomena, Process, etc)	Description	Importance	Knowledge	Associated AREVA DDN Number	Rationale
V2-2.4-2	Decay heat and distribution vs. time	Affects Tfuel,max for D-LOFC.	H	M	N/A	As pointed out by the panel, standard decay heat curves are generally conservative. This issue will therefore be resolved in normal design work.
V2-2.4-3	RCCS spatial heat loadings	Major shifts in heat load to middle of RCCS. Complex geometries involved. Reference: #13 from general LOFC table.	M	M	3.3.4.0	This issue will be resolved in normal design work and supported by DDN 3.3.4.0.
V2-2.4-4	Heatup accident fuel performance modeling	Crucial factor in reactor design limits. Dependent on fuel type, operational history.	H	M	4.1.3.1 4.2.3.1	This issue is covered by DDN 4.1.3.1 and 4.2.3.1.
V2-2.4-5	Hydrodynamic conditions for dust suspension (fluid structure interactions)	From discussion with fission product panel.	H	M	2.4.1.0	Analysis will be performed as part of normal design work based on graphite dust DDN 2.4.1.0. Any need for additional data will be determined at that time.
V2-2.4-6	Dust effect on coolant properties and flow in vessel	Affects circulation.	L	M	N/A	This issue is of low importance. No further data is needed.
V2-2.4-7	Cavity over-pressurization	Possible damage to cavity components.	H	H	N/A	As noted by the panel, good models are available. This issue is therefore covered by existing data.
V2-2.4-8	Pressure pulse in confinement	Possible damage to cavity components.	H	M	N/A	This issue will be resolved in normal design work.

Table 4-3 continued (Accident and Thermal Fluids Analysis)

AREVA PIRT ID No.	Issue (Phenomena, Process, etc)	Description	Importance	Knowledge	Associated AREVA DDN Number	Rationale
Air Ingress LOFC PIRT Chart						
V2-2.5-1	Coolant flow and thermal properties for mixed gases in vessel	Determines friction and heat transfer characteristics in core. Viscosity and thermal conductivity.	H	H	N/A	Properties are known based on predicted gas mixtures. This issue is covered by existing data.
V2-2.5-2	Heat transfer correlations for mixed gases in core	Determines heat transfer characteristics in core.	M	M	4.1.2.2 4.2.2.2	This issue is covered by DDN 4.1.2.2 and 4.2.2.2.
V2-2.5-3	RCCS performance with "gray gas" in cavity	Particulates, etc in cavity reduces radiant heat transfer. Complex processes involved. As seen in G-LOFC #8	M	L	N/A	This issue will be resolved as part of normal design work. Scoping calculations will be performed to assess the significance of this issue. Initial methods qualification will be performed using existing data on radiation through participating media. If need for additional information is identified, DDN 3.3.4.0 will be modified to explicitly include appropriate separate effects and/or integrated testing

Table 4-3 continued (Accident and Thermal Fluids Analysis)

AREVA PIRT ID No.	Issue (Phenomena, Process, etc)	Description	Importance	Knowledge	Associated AREVA DDN Number	Rationale
V2-2.5-4	Fuel performance with oxygen attack	Consideration for long-term air ingress involving core (fueled area) oxidation. FP releases observed for high temperature exposures.	H	M	2.4.1.0 1.3.1.0	This issue is covered by DDN 2.4.1.0 (fuel blocks). It also requires a new fuel DDN: 1.3.1.0 (fuel particles). The other aspects of fuel performance are covered by the analysis.
V2-2.5-5	Core support structures oxidation	Low-temperature oxidation potentially damaging to structural strength.	H	M	2.4.1.0	This issue is covered by DDN 2.4.1.0.
V2-2.5-6	Core oxidation	Determination of "where" in core the oxidation would take place. Graphite oxidation kinetics affected by temp, oxygen content of air, irradiation of graphite.	H	M	4.1.2.2	This issue is covered by DDN 4.1.2.2.
V2-2.5-7	Rx cavity-to-reactor vessel air ingress [see #14 and 15]	Air from cavity to vessel after D-LOFC.	H	M	4.2.2.2	This issue requires modification of DDN 4.2.2.2 to reference countercurrent flow and diffusion.
V2-2.5-8	Phenomena that affect cavity gas composition and temperature with inflow	Provides gas ingress and cold-leg conditions. Needed to calculate ingress flow rate and properties. Entrainment through relief valve, etc. Dependent variable.	H	M	N/A	This issue will be resolved during normal design work based on bounding assumptions. The need for refined data will be reassessed at a later stage.
V2-2.5-9	Cavity gas stratification and mixing	Provides gas ingress and cold-leg conditions. Needed to determine oxidation rate.	M	M	N/A	This issue will be resolved during normal design work based on bounding assumptions. The need for refined data will be reassessed at a later stage.

Table 4-3 continued (Accident and Thermal Fluids Analysis)

AREVA PIRT ID No.	Issue (Phenomena, Process, etc)	Description	Importance	Knowledge	Associated AREVA DDN Number	Rationale
V2-2.5-10	Confinement-to-reactor cavity air ingress	Determines long-term oxidation rate if accident unchecked.	H	M	N/A	This issue will be resolved during normal design work based on bounding assumptions. The need for refined data will be reassessed at a later stage.
V2-2.5-11	Cavity combustion gases	Some CO formed as oxidation product.	L	M	N/A	Per the panel, there is little danger from CO combustion and it shouldn't affect cooldown. This issue is therefore of low importance and no further data is needed.
V2-2.5-12	Cavity structural integrity during blowdown	Influence on air ingress analysis modeling.	M	M	N/A	This issue will be resolved in normal design work.
V2-2.5-13	Cavity filtering performance	Affects radioactive dust releases. Dust can contribute to the source term for PBR.	H	M	N/A	This issue will be resolved during normal design work and is supported by DDNs concerning FP transport.
V2-2.5-14	Duct exchange flow	Stratified flow phenomena leading to helium flow exit and air ingress into lower plenum.	H	M	4.2.2.2	This issue requires modification of DDN 4.2.2.2 to reference countercurrent flow.
V2-2.5-15	Molecular diffusion	Air remaining in the reactor cavity enters into RV by molecular diffusion, prior to onset of natural circulation.	H	M	4.2.2.2	This issue requires modification of DDN 4.2.2.2 to reference diffusion.

Table 4-3 continued (Accident and Thermal Fluids Analysis)

AREVA PIRT ID No.	Issue (Phenomena, Process, etc)	Description	Importance	Knowledge	Associated AREVA DDN Number	Rationale
V2-2.5-16	Chimney effects	In case of double break exposing both the upper and lower plenum to confinement air.	M	M	N/A	Per the panel, models are available for bounding calculations. This issue will therefore be resolved in normal design work.
V2-2.5-17	Thermal stratification/mixing in the lower plenum	[See #14]	No Entry	No Entry	4.2.2.2	This issue requires modification of DDN 4.2.2.2 to include qualification of stratification.
V2-2.5-18	Environment-to-confinement air leakage	[See #10]	No Entry	No Entry	N/A	This issue will be resolved in normal design work.
V2-2.5-19	Core flow distribution following onset of natural circulation	[See #1]	No Entry	No Entry	N/A	This issue is covered by existing data.
Reactivity (ATWS) PIRT Chart						
V2-2.6-1	Reactivity insertion due to pebble core compaction (packing fraction) via earthquake	Potentially sharp increase in reactivity with packing fraction.	M	M	N/A	This issue concerns pebble bed designs and is not relevant to the selected NGNP concept.
V2-2.6-2	~~[Prismatic] Excess reactivity due to burnable poison loading error (BP)~~	~~Potential for large reactivity inputs with large excess reactivity. Uncertainty depending on BP design.~~	No Entry	No Entry	N/A	This issue was eliminated by the PIRT panel.
V2-2.6-3	Reactivity insertion due to steam-water ingress accidents	Positive reactivity insertions possible. Complex processes involved. Also decreases control rod effectiveness.	H	M	N/A	Detailed calculations will be performed during normal design work.
V2-2.6-4a	Phenomena for water or steam ingress from SCS, or PCU coolers	Some water ingress scenarios are postulated. Effects on reactivity	L	M	N/A	This issue will be resolved during normal design work.

Table 4-3 continued (Accident and Thermal Fluids Analysis)

AREVA PIRT ID No.	Issue (Phenomena, Process, etc)	Description	Importance	Knowledge	Associated AREVA DDN Number	Rationale
V2-2.6-4b	Mechanisms for water or steam ingress from steam generator	Some water ingress scenarios are postulated. Effects on reactivity	No Entry	No Entry	N/A	This issue will be resolved during normal design work.
V2-2.6-5	Reactivity temperature feedback coefficients (fuel moderator, reflectors)	Affects passive safety shutdown characteristics	H	M	4.2.1.1	Methods will be qualified and the issue is covered by DDN 4.2.1.1.
V2-2.6-6	Control and scram rods, and reserve shutdown worths	Needed for cold or hot shutdown validation.	H	M	N/A	This issue will be analyzed in detail during design and confirmed at reactor startup. Per the panel, measurement of control rod worths are generally performed as part of reactor startup procedures.
V2-2.6-7	Xenon and samarium buildup	Determination of poison distribution. Xenon decay determines recriticality time.	M	M	N/A	This issue will be resolved during normal design work and existing data is adequate.
V2-2.6-8	~~Scram and reserve shutdown system fails~~	~~Needed for cold shutdown validation.~~	No Entry	No Entry	N/A	This issue was eliminated by the PIRT panel.
V2-2.6-9	~~Rod ejection~~	~~Design features.~~	No Entry	No Entry	N/A	This issue was eliminated by the PIRT panel.
V2-2.6-10	Coolant flow restarts during loss of forced circulation ATWS	Can lead to selective under-cooling of hot regions. Coupled thermal-fluids and neutronics.	M	L	N/A	This issue will be resolved during normal design work.
V2-2.6-11	Decay heat during loss of forced circulation ATWS (vs. time and distribution)	See entry in G-LOFC chart (item #21)	No Entry	No Entry	N/A	This issue will be resolved during normal design work.

Table 4-3 continued (Accident and Thermal Fluids Analysis)

AREVA PIRT ID No.	Issue (Phenomena, Process, etc)	Description	Importance	Knowledge	Associated AREVA DDN Number	Rationale
V2-2.6-12	Reactivity insertion from overcooling transients with ATWS	Positive reactivity from decreases in core inlet temperature.	L	H	N/A	Per the panel, this issue is readily bounded by current analyses. Feedback coefficients are known sufficiently well for bounding analysis. This issue is therefore covered by existing data and is of low importance.
V2-2.6-13	Reactivity insertion from core support failure due to air ingress corrosion	Core drop pulling away from control rods would insert reactivity.	L	M	N/A	Per the panel, maximum withdrawal of control rods will probably not lead to recriticality. This issue is therefore of low importance and no further data is needed.
IHX Failure (Molten Salt) PIRT Chart						
V2-2.7-1	Ingress of He into IHX loop (part of confinement bypass)	Blowdown of primary system into secondary system, gas jet into liquid, initial circulating activity is the prime source of the public and worker dose.	M	H	N/A	This issue is not relevant to the selected NGNP concept.
V2-2.7-2	Fission product transport through IHX loop (part of confinement bypass)	Deposit/removal of FP, dust, scrubbing of molten salt, adsorption, plate-out.	H	M	N/A	This issue is not relevant to the selected NGNP concept.
V2-2.7-3	He transport in IHX loop (part of confinement bypass)	Possible He/molten salt countercurrent flow, blocking bubble in IHX loop.	M	M	N/A	This issue is not relevant to the selected NGNP concept.
V2-2.7-4	Ingress of molten salt (MS) into primary system and RPV	After partial blowdown, relies on items #1, 2, 3 as initial/boundary conditions.	H	M	N/A	This issue is not relevant to the selected NGNP concept.

Table 4-3 continued (Accident and Thermal Fluids Analysis)

AREVA PIRT ID No.	Issue (Phenomena, Process, etc)	Description	Importance	Knowledge	Associated AREVA DDN Number	Rationale
V2-2.7-5	Riser fill with molten salt	Through cold duct.	H	M	N/A	This issue is not relevant to the selected NGNP concept.
V2-2.7-6	Lower plenum fill with molten salt	Through hot duct.	H	M	N/A	This issue is not relevant to the selected NGNP concept.
V2-2.7-7	Molten salt (in cold duct)-to-core support/vessel heat transfer	No Entry	H	M	N/A	This issue is not relevant to the selected NGNP concept.
V2-2.7-8	Molten salt (in hot duct)-to-core support/vessel heat transfer	No Entry	M	M	N/A	This issue is not relevant to the selected NGNP concept.
V2-2.7-9	RCCS heat removal	Heat transfer from vessel wall to RCCS and cavity.	H	M	N/A	This issue is not relevant to the selected NGNP concept.
Water-Steam Ingress PIRT Chart (See Note)						
V2-X.8-1	Coolant flow properties for mixed gases in core	Determines friction and heat transfer characteristics in core. Can affect accident outcome.	No Entry	No Entry	N/A	This issue is covered by existing data.
V2-X.8-2	Heat transfer correlations for mixed gases in core	Determines heat transfer characteristics in core. Can affect accident outcome.	No Entry	No Entry	N/A	This issue will be resolved during normal design work.
V2-X.8-3	RCCS performance with "gray gas" in cavity	Particulates, etc in cavity reduces radiant heat transfer. Complex processes involved.	No Entry	No Entry	3.3.4.0	The connection between water ingress and this phenomenon is not clear. But if this issue were to happen, DDN 3.3.4.0 covers it.
V2-X.8-4	Mechanisms for water or steam ingress from SCS or PCU coolers	Some water ingress scenarios are postulated. Effects on reactivity and core degradation.	No Entry	No Entry	N/A	This issue will be resolved during normal design work.

Table 4-3 continued (Accident and Thermal Fluids Analysis)

AREVA PIRT ID No.	Issue (Phenomena, Process, etc)	Description	Importance	Knowledge	Associated AREVA DDN Number	Rationale
V2-X.8-5	Fuel performance with oxygen attack	Consideration for water ingress involving core (fueled area) oxidation. FP releases observed for high temperature exposures.	No Entry	No Entry	2.4.1.0 1.3.1.0	This issue is covered by DDN 2.4.1.0 (fuel blocks). It also requires a new fuel DDN: 1.3.1.0 (fuel particles).
V2-X.8-6	Core support structures oxidation modeling	Core support structure area potential weakening.	No Entry	No Entry	2.4.1.0	This issue is covered by DDN 2.4.1.0.
V2-X.8-7	Core (steam) oxidation modeling	Determination of "where" in core the oxidation would take place.	No Entry	No Entry	4.1.2.2	This issue is covered by DDN 4.1.2.2.
V2-X.8-8	Cavity gas composition and temperature	Provides steam/gas ingress and cold-leg conditions. Needed to calculate ingress flow rate and properties.	No Entry	No Entry	N/A	This scenario and its focus are not clear. However, other DDNs and associated models are sufficient to model a steam-ingress event which will be modeled during normal design work.
V2-X.8-9	Cavity gas stratification and mixing	Provides steam/gas ingress and cold-leg conditions. Needed to determine oxidation rate.	No Entry	No Entry	N/A	This scenario and its focus are not clear. However, other DDNs and associated models are sufficient to model a steam-ingress event which will be modeled during normal design work.
V2-X.8-10	Cavity combustion gases	No Entry	No Entry	No Entry	N/A	This issue should not affect cooldown, no further data is needed.
V2-X.8-12	Cavity structural performance	Influence on ingress analysis modeling.	No Entry	No Entry	N/A	This issue will be resolved during normal design work.

Table 4-3 continued (Accident and Thermal Fluids Analysis)

AREVA PIRT ID No.	Issue (Phenomena, Process, etc)	Description	Importance	Knowledge	Associated AREVA DDN Number	Rationale
V2-X.8-13	Cavity filtering performance	Affects radioactive dust releases.	No Entry	No Entry	N/A	This issue will be resolved during normal design work and is supported by DDNs concerning FP transport.
V2-X.8-14	Pressure transients from steam formation	Potential damage to primary system structures.	No Entry	No Entry	N/A	This issue will be resolved during normal design work.

Table 4-4: Fission Product Transport PIRT-to-DDN Reconciliation

AREVA PIRT ID No.	Issue (Phenomena, Process, etc)	Description	Importance	Knowledge	Associated AREVA DDN Number	Rationale
V3-10-1	Decay heat and transient power level	Energy source driving problem. Boundary conditions expected from TF PIRT	H	H	N/A	Issue will be resolved in normal design work.
V3-10-2	Material/structure properties	Density, viscosity, conductivity, etc., important parameters in calculations	H	M (graphite) H (steel, concrete)	2.4.1.0	Issue covered by existing DDN. Other material properties covered by existing data.
V3-10-3	Graphite impurity levels	Impurity reaction with FP, nuclear graphite expected to have low impurity levels	4M 1H	H	N/A	Issue covered by existing/established data
V3-10-4	Graphite geometry	Core structure (design information)	H	1M 4H	N/A	Issue will be resolved in normal design work.
V3-10-5	Thermal-fluid properties	Temperature, pressure, velocity computations	H	4M 1H	N/A	Issue will be resolved in normal design work.
V3-10-6	Gas composition	Oxygen potential and chemical activity	H	4M 1L	N/A	Issue will be resolved in normal design work.
V3-10-7	Gas flow path prior, during and post accident	Information needed to model accident	H	5Same as TF group	N/A	Issue will be resolved in normal design work.
V3-10-8	Temperature (structure and gas) and pressure distribution	Information needed to model accident	H	H	N/A	Issue will be resolved in normal design work.

Table 4-4 continued (Fission Product Transport)

AREVA PIRT ID No.	Issue (Phenomena, Process, etc)	Description	Importance	Knowledge	Associated AREVA DDN Number	Rationale
V3-10-9	FP plate-out and dust distribution under normal operation	Starting conditions for accident analysis	H	1L 4M	N/A	Issue will be resolved in normal design work. Method validation supported by DDNs described elsewhere.
V3-10-10	Matrix permeability, tortuosity	Needed for first principle transport modeling. FP holdup as barrier, release as dust; expected from material PIRT.	1M 4H	4L 1M	1.3.2.0	Issue requires new DDN.
V3-10-11	FP transport through matrix	Effective release rate coefficient (empirical constant) as an alternative to first principles.	H	L	1.3.2.0	Issue requires new DDN.
V3-10-12	Fuel block permeability, tortuosity	Needed for first principle transport modeling.	1M 4H	M	2.4.1.0	Issue requires modification of existing DDN - Expand to include microstructural characteristics in list of study topics.
V3-10-13	FP transport through fuel block	Effective release rate coefficient (empirical constant) as an alternative to first principles	H	1L 4M	2.4.2.0	Issue requires new DDN.
V3-10-14	Thermal (Soret) diffusion	Thermal gradients are not large outside of fuel	L	L	N/A	Issue of low importance - no further data needed.
V3-10-15	Basal plane diffusion	Porosity is preferred transport pathway through graphite	L	M	N/A	Issue of low importance - no further data needed.
V3-10-16	Reflector (in contact w/flow) permeability, tortuosity	Needed for first principle transport modeling	L	M	N/A	Issue of low importance - no further data needed.
V3-10-17	FP transport through reflector (in contact w/flow)	Effective release rate coefficient (empirical constant) as an alternative to first principles	L	1L 4M	N/A	Issue of low importance - no further data needed.
V3-10-18	Sorbtivity graphite	Can determine holdup and release of FP	H	M	2.4.2.0	Issue requires new DDN.

Table 4-4 continued (Fission Product Transport)

AREVA PIRT ID No.	Issue (Phenomena, Process, etc)	Description	Importance	Knowledge	Associated AREVA DDN Number	Rationale
V3-10-19	Fluence effect on transport in graphite	Influences transport, chemical reactivity	H	M	2.4.2.0	Issue requires new DDN.
V3-10-20	C-14, Cl-36, Co-60 generation and inventory	Radioisotope generated from impurities, might become operational issue	4L 1M	M	N/A	Issue will be resolved in normal design work.
V3-10-21	Air attack on graphite	Graphite erosion/oxidation, Fe/Cs catalysis liberating FPs	H	1L 4M	2.4.1.0	Issue covered by existing DDN.
V3-10-22	Steam attack on graphite	If credible source of water present; design dependent	H	1L 4M	2.4.1.0	Issue covered by existing DDN.
V3-10-23	FP speciation in carbonaceous material	Chemical form in graphite affects transport	H	L	2.4.2.0	Issue requires new DDN.
V3-10-24	FP speciation during mass transfer	Chemical change can alter volatility	H	1L 4M	1.3.3.0	Issue requires new DDN.
V3-10-25	“Knock-along”	Alpha recoil transport of deposited particles on surfaces. Slow compared to fluid flow transport	L	M	N/A	Issue of low importance - no further data needed.
V3-10-26	Dust generation	Vector for FP transport; possibility of high mobility	H	M	2.4.1.0	Issue covered by existing DDN.
V3-10-27	(De)Absorption on dust	Provides copious surface area for FP absorption	H	2L 3M	2.4.2.0	Issue requires new DDN.
V3-10-28	H-3 generation and circulating coolant inventory	Radioisotope, an issue with operational release. H-3 production from He- 3 in coolant, ternary fission, and Li-6 in graphite	4M 1H	M	N/A	Issue will be resolved in normal design work.
V3-10-29	Ag-110*m* generation, transport	Radioisotope, significant O&M dose on cool, metallic components	H (O&M) L (release)	L	N/A	Issue will be resolved in normal design work. Method validation supported by DDNs described elsewhere.

Table 4-4 continued (Fission Product Transport)

AREVA PIRT ID No.	Issue (Phenomena, Process, etc)	Description	Importance	Knowledge	Associated AREVA DDN Number	Rationale
V3-10-30	Other activation products (e.g., Cs-134, Mn-55, Fe-56)	Radioisotopes, potential O&M dose	L	M	N/A	Issue of low importance - no further data needed.
V3-10-31	Nucleation	Unclear due to extremely low FP vapor concentration anticipated	M	M	N/A	Issue will be resolved in normal design work.
V3-10-32	Aerosol growth	Low concentration growth can lead to high shape factors and unusual size distribution	1M 4H	L	4.1.4.1	Issue requires modification of existing DDN - Clarify that data collection is needed to support aerosol growth model.
V3-10-33	Surface roughness	Affects aerosol deposition 1–5 micron particles	M	M	4.1.4.1	Issue requires modification of existing DDN - Clarify that data collection is needed to support surface roughness model.
V3-10-34	Coolant chemical interaction with surfaces	Changes oxygen and carbon potential which can affect nature and quantity of sorbed species	H	M	4.1.4.1	Issue requires modification of existing DDN -Clarify that data collection is needed to support modeling of coolant chemical interaction with surfaces.
V3-10-35	FP diffusivity, sorbtivity in non-graphite surfaces	Determines FP location during operation; acts as a trap during transient	H	L	4.1.4.1	Issue requires modification of existing DDN -Clarify that data collection is needed to support modeling of FP diffusivity and sorbtivity in non-graphite surfaces.

Table 4-4 continued (Fission Product Transport)

AREVA PIRT ID No.	Issue (Phenomena, Process, etc)	Description	Importance	Knowledge	Associated AREVA DDN Number	Rationale
V3-10-36	Aerosol/dust deposition	Gravitational, inertial, thermophoresis, electrostatic, diffusional, turbophoresis	H	M	4.1.4.1	Issue requires modification of existing DDN -Clarify that data collection is needed to support modeling of aerosol and dust deposition.
V3-10-37	Aerosol/dust bounce, breakup during deposition	Can modify deposition profile and suspended aerosol distribution	4M 1H	4L 1M	4.1.4.1	Issue requires modification of existing DDN -Clarify that data collection is needed to support modeling of aerosol and dust bounce and breakup.
V3-10-38	Re-suspension	Flow/vibration induced, saltation; mechanical forces can release FPs from pipe surface layers/films	H	4L 1M	4.1.4.1	Issue requires modification of existing DDN -Clarify that data collection is needed to support modeling fission product re-suspension.
V3-10-39	Confinement aerosol physics	Analogous to LWR aerosol behavior/physics, delta-T, chemistry; important holdup mechanism	H	M	4.1.4.1	Issue requires modification of existing DDN -Clarify that data collection is needed to support modeling confinement aerosol physics.
V3-10-40	Dust deposition on vessel and RCCS hardware	Not important for FP transport but may affect radiative heat transfer in reactor cavity	L	L	N/A	Issue of low importance - no further data needed.
V3-10-41	Corrosion products	Spalled surface films; low corrosion environment	L	H	N/A	Issue of low importance - no further data needed.

Table 4-4 continued (Fission Product Transport)

AREVA PIRT ID No.	Issue (Phenomena, Process, etc)	Description	Importance	Knowledge	Associated AREVA DDN Number	Rationale
V3-10-42	Erosion products, non-carbon	Low concentration of coarse materials	L	L	N/A	Issue of low importance - no further data needed.
V3-10-43	Wash-off	If credible source of water present; design dependent	H	M	4.1.4.1	Issue is covered by existing DDN.
V3-10-44	Failure modes of auxiliary systems (e.g., gas cleanup, holdup, refueling)	Potential release due to failure	M	M	N/A	Issue will be resolved in normal design work.
V3-10-45	Radiolysis effects in confinement	FP (e.g., I, Ru, Te) chemistry, paint chemistry (dependent on confinement radiation level)	H	M	N/A	Issue will be resolved in normal design work.
V3-10-46	Filtration	Traditional passive charcoal/HEPA	H	H	N/A	Issue covered by existing/established data
V3-10-47	Production/combustion of flammable gas	CO, H_2 production issues, IHX secondary primary leak, potential re-suspension and chemical transformation of FPs	M	1M 4H	N/A	Issue covered by existing/established data
V3-10-48	Combustion of dust in confinement	Source of heat and distribution of FPs with in confinement	H	1L 4M	N/A	Issue will be resolved in normal design work.
V3-10-49	NGNP-unique leakage path beyond confinement	IHX to secondary site contamination; could be risk dominant	H	1L 4H	N/A	Issue not relevant to selected NGNP concept. No IHXs in selected concept. SG system provides more robust barrier.
V3-10-50	Confinement leakage path, release rate through penetrations	Cable/pipe penetrations, cracks, holes, HVAC	H	M	N/A	Issue will be resolved in normal design work.
V3-10-51	Cable pyrolysis, fire	Soot generation and changes to iodine chemistry	H	M	N/A	Issue will be resolved in normal design work.

Table 4-4 continued (Fission Product Transport)

AREVA PIRT ID No.	Issue (Phenomena, Process, etc)	Description	Importance	Knowledge	Associated AREVA DDN Number	Rationale
V3-10-52	Pressure-relief-valve filter	Opening of the relief valve generates a transport path that may be filtered; depends on design	L	H	N/A	Issue will be resolved in normal design work.
V3-10-53	Re-criticality (slow)	Additional thermal load to fuel. Increases source but not expected to affect transport path.	H	M	N/A	Issue will be resolved in normal design work.
V3-10-54	Fuel-damaging RIA	An intense pulse could damage fuel. Increases source but not expected to affect transport path	H	M	N/A	Issue will be resolved in normal design work.
V3-10-55	Argon activation in reactor cavity	Air in cavity activated by neutron leakage and can escape to environment	H (normal operation)	H	N/A	Issue covered by existing/established data
V3-10-56	Redistribution of fission products due to control rod movement	Articulated control rod joints can collect and redistribute fission products	L	L	N/A	Issue of low importance - no further data needed.

Table 4-5: High Temperature Materials PIRT-to-DDN Reconciliation

AREVA PIRT ID No.	Issue (Phenomena, Process, etc)	Description	Importance	Knowledge	Associated AREVA DDN Number	Rationale
Reactor Pressure Vessel						
V4-6-1	Thermal aging (long term) (Grade 91, 9Cr1Mo)	Uncertainty in properties of 9 Cr–1 Mo steel (grade 91), especially degradation and aging of base metals and welds for a critical component like the RPV, must be addressed for 60-year lifetimes. Although unlikely, is Type IV cracking at NGNP operating temperatures possible for very long time (60 years) exposure? Need is for long-term aging data at NGNP relevant temperatures.	H	M	N/A	Issue not relevant to selected NGNP concept. LWR steel is used.
V4-6-2	Thermal aging (long term) (LWR Steels)	Concern is vessel breach.	L	H	N/A	Issue of low importance - no further data needed.
V4-6-3	Thermal aging (short term, high temperature) (Grade 91, 9Cr1Mo)	Grade 91 aging during high temperature, short-term excursions of ~100 h, economic impact on continued plant operation, potential for microstructural changes and impact on properties.	M	M	N/A	Issue not relevant to selected NGNP concept. LWR steel is used.
V4-6-4	Thermal aging (short term, high temperature) (LWR Steels)	LWR steels within existing experience base. More information needed on extended times, temperatures for Code Case 499.	L	H	N/A	Issue of low importance - no further data needed.

Table 4-5 continued (High Temperature Materials)

AREVA PIRT ID No.	Issue (Phenomena, Process, etc)	Description	Importance	Knowledge	Associated AREVA DDN Number	Rationale
V4-6-5	Crack initiation and subcritical crack growth (Grade 91, 9Cr1Mo)	9 Cr–1 Mo steel (grade 91) must be assessed for phenomena due to transients and operationally induced— thermal loading, pressure loading, residual stress, existing flaws (degradation of welds, cyclic loading, low cycle fatigue).	H	L	N/A	Issue not relevant to selected NGNP concept. LWR steel is used.
V4-6-6	Crack initiation and subcritical crack growth (LWR Steels)	Differing opinions; question raised about whether important for HTGR application. Thermal gradients not expected to be as severe as for LWRs.	H	H	N/A	Issue covered by existing/established data.
V4-6-7	High cycle fatigue (HCF) (Grade 91, 9Cr1Mo)	Concern is vessel breach.	L	M	N/A	Issue not relevant to selected NGNP concept. LWR steel is used.
V4-6-8	High cycle fatigue (HCF) (LWR Steels)	Concern is vessel breach.	L	H	N/A	Issue of low importance - no further data needed.
V4-6-9	Radiation degradation (Grade 91, 9Cr1Mo)	Need to demonstrate lack of radiation degradation over 60 year.	M	L	N/A	Issue not relevant to selected NGNP concept. LWR steel is used.
V4-6-10	Radiation degradation (LWR Steels)	Some question about softer spectrum effects, but not expected to control material response.	L	H	N/A	Issue of low importance - no further data needed.
V4-6-11	Compromise of emissivity due to loss of desired surface layer properties	Formation and control of surface layers must be considered under both helium and air environments. Must maintain high emissivities on both inside and outside surfaces.	H	L	2.2.4.1	Issue requires modification of existing DDN - Specify more clearly that emissivity studies are in both air and helium and consider emissivity degradation.

Table 4-5 continued (High Temperature Materials)

AREVA PIRT ID No.	Issue (Phenomena, Process, etc)	Description	Importance	Knowledge	Associated AREVA DDN Number	Rationale
V4-6-12	Creep (transient) (Grade 91, 9Cr1Mo)	Creep during high temperature, short-term excursions of ~100 h, economic impact on continued plant operation, potential for excessive vessel deformation could potentially affect core geometry.	M	M	N/A	Issue not relevant to selected NGNP concept. LWR steel is used.
V4-6-13	Creep (transient) (LWR Steels)	Creep during high temperature, short-term excursions of ~100 h, economic impact on continued plant operation, potential for excessive vessel deformation could potentially affect core geometry.	M	M	2.2.4.1	Issue requires modification of existing DDN - Specify transient creep testing at high temperatures.
V4-6-14	Creep (normal operations) (Grade 91, 9Cr1Mo)	Ensure negligible creep during normal operations.	M	L	N/A	Issue not relevant to selected NGNP concept. LWR steel is used.
V4-6-15	Creep (normal operations) (LWR Steels)	Ensure negligible creep during normal operations.	L	M	N/A	Issue of low importance - no further data needed.
V4-6-16	Field fabrication process control	Because of vessel size, must address field fabrication [including welding, post-weld heat treatment, section thickness (especially with 9 Cr–1 Mo steel)] and pre-service inspection.	H	L	2.2.4.2	Issue requires new DDN.
V4-6-17	Property control in heavy sections	Because of vessel size, must address field fabrication [including welding, post-weld heat treatment, section thickness (especially with 9 Cr–1 Mo steel)] and pre-service inspection	H	L	2.2.4.2	Issue requires new DDN.
Power Conversion Vessels (PCVs) and Turbomachinery						
V4-6-18	Thermal aging	Concern is vessel breach.	L	H	N/A	Issue not relevant to selected NGNP concept. No helium turbomachinery.

Table 4-5 continued (High Temperature Materials)

AREVA PIRT ID No.	Issue (Phenomena, Process, etc)	Description	Importance	Knowledge	Associated AREVA DDN Number	Rationale
V4-6-19	Crack initiation and subcritical crack growth in power conversion vessel (PCV)	Concern is vessel breach.	L	H	N/A	Issue not relevant to selected NGNP concept. No helium turbomachinery.
V4-6-20	High cycle fatigue in PCV	Loading deriving from rotational and thermal-hydraulic (T-H) feedback. Severity must be assessed.	M	H	N/A	Issue not relevant to selected NGNP concept. No helium turbomachinery.
V4-6-21	Missile (disc failure)	Turbomachinery failure could be caused during normal operations—analog with jet engines (creep, creep crack growth, thermal loading, rotational stresses, fatigue, creep-fatigue of turbine disk).	M	M	N/A	Issue not relevant to selected NGNP concept. No helium turbomachinery.
V4-6-22	Creep, creep crack growth, thermal loading, rotational stress, fatigue, creep fatigue	Concern about debris plugging core cooling channels, causing damage.	M	M	N/A	Issue not relevant to selected NGNP concept. No helium turbomachinery.
V4-6-23	Primary coolant contamination (carburization?)	Oil bearing failure. Coolant chemistry can be affected by oil contamination and exacerbates issues with heat exchanger.	M	M	N/A	Issue not relevant to selected NGNP concept. No helium turbomachinery.
Circulators						
V4-6-24	Primary coolant contamination (carburization?)	Oil bearing failure. Coolant chemistry can be affected by oil contamination and exacerbates issues with heat exchanger.	M	M	N/A	Issue not relevant to selected NGNP concept. Concept uses magnetic bearings.

Table 4-5 continued (High Temperature Materials)

AREVA PIRT ID No.	Issue (Phenomena, Process, etc)	Description	Importance	Knowledge	Associated AREVA DDN Number	Rationale
V4-6-25	Creep, creep crack growth, thermal loading, rotational stress, fatigue, creep fatigue	Impeller failure. Concern about debris plugging core cooling channels, causing damage.	M	M	3.1.1.0	Issue requires modification of existing DDN - Specify that tests must be sufficient to assess age-related impeller failure modes (creep, fatigue).
Piping						
V4-6-26	Thermal aging	Thermal aging due to long-term conditions and short-term high temperature; assuming all ferritic piping operated below the creep range.	L	M	N/A	Issue of low importance - no further data needed.
V4-6-27	Crack initiation and subcritical crack growth	Concern is pipe breach.	M	M	N/A	Issue will be resolved in normal design work.
V4-6-28	High cycle fatigue	HCF from T-H loading; from resonance.	M	M	N/A	Issue will be resolved in normal design work.
V4-6-29	Erosion	The potential exists for particle erosion in the piping system, particularly at elbows, due to entrainment of graphite dust in high-velocity helium.	M	M	N/A	Issue will be resolved in normal design work.
V4-6-30	Aging fatigue, environmental degradation of insulation	Concern is about insulation debris plugging core cooling channels, causing damage due to chunks of internal insulation falling off (ceramic sleeves or carbon–carbon composites would be most likely source of problems).	H	L	3.1.5.0	Issue requires modification of existing DDN - Specify that qualification tests must assess potential for ceramic fiber/insulation release over time and during transients.

Table 4-5 continued (High Temperature Materials)

AREVA PIRT ID No.	Issue (Phenomena, Process, etc)	Description	Importance	Knowledge	Associated AREVA DDN Number	Rationale
V4-6-31	Aging fatigue, environmental degradation of insulation	Failed insulation leads to hot spots or cooling system leak - focus is on failure to insulate and effect on piping due to transients operationally induced—thermal loading, pressure loading, residual stress, existing flaws.	M	L	3.1.5.0	Issue covered by existing DDN.
Intermediate Heat Exchanger (IHX) Vessel						
V4-6-32	Thermal aging	Concern is breach to ambient.	L	H	N/A	Issue not relevant to selected NGNP concept. No IHX used.
V4-6-33	Crack initiation and subcritical crack growth	Concern is Breach to ambient.	M	H	N/A	Issue not relevant to selected NGNP concept. No IHX used.
V4-6-34	High cycle fatigue	HCF from T-H loading; from resonance. Concern is breach to ambient.	L	H	N/A	Issue not relevant to selected NGNP concept. No IHX used.
Intermediate Heat Exchanger (IHX)						
V4-6-35	Crack initiation and propagation (due to creep crack growth, creep, creep-fatigue, aging (with or without load), subcritical crack growth)	Environmental effects on subcritical crack growth— subject to impacts of design issues, particularly for thin section must be addressed. Stresses on IHX (both thin and thick sections) can lead to these failure phenomena; thermal transients can cause toughness concerns and carbide redistribution as a function of thermal stress can change through-thickness properties.	H	L	N/A	Issue not relevant to selected NGNP concept. No IHX used.

Table 4-5 continued (High Temperature Materials)

AREVA PIRT ID No.	Issue (Phenomena, Process, etc)	Description	Importance	Knowledge	Associated AREVA DDN Number	Rationale
V4-6-36	Primary boundary design methodology limitations for new structures (lack of experience)	Time-dependent design criteria for complex structures need to be developed and verified by structural testing. ASME Code approved simplified methods have not been proven and are not permitted for compact IHX components.	H	L	N/A	Issue not relevant to selected NGNP concept. No IHX used.
V4-6-37	Manufacturing phenomena (such as joining)	Compact heat exchanger (CHX) cores (if used) will require advanced machining, forming, and joining (e.g., diffusion bonding, brazing, etc.) methods that may impact component integrity. Must assess CHX vs. traditional tube and shell concepts. However, these phenomena are generic and extend beyond the CHXs to all the very high-temperature heat exchangers (HXs).	H	L	N/A	Issue not relevant to selected NGNP concept. No IHX used.
V4-6-38	Inspection/testing phenomena	Traditional nondestructive evaluation (NDE) methods will not work for CHXs because of geometrical constraints. Proof testing of some kind will be required (maybe leak testing with tracer). Pre-service testing will be difficult, and in-service testing will be even harder. Condition monitoring may be useful.	H	L	N/A	Issue not relevant to selected NGNP concept. No IHX used.
V4-6-39	Water or chemical ingress/attack	The potential exists for contamination of the secondary circuit with water or process chemicals from the hydrogen production plant.	M	M	N/A	Issue not relevant to selected NGNP concept. No IHX used.

Table 4-5 continued (High Temperature Materials)

AREVA PIRT ID No.	Issue (Phenomena, Process, etc)	Description	Importance	Knowledge	Associated AREVA DDN Number	Rationale
V4-6-40	Plastic instability	Degradation due to brazing, diffusion-bonding, next generation joining techniques can result in structural instability and plastic collapse (buckling problem). May be ultimately safety issue because of core overheating, analogous in some respects to tube plugging and leakage above threshold. Exacerbated by extreme high service temperatures with regard to available material capabilities (e.g., low margin).	M	L	N/A	Issue not relevant to selected NGNP concept. No IHX used.
Control Rods (nonmetallic)						
V4-6-41	Radiation-induced degradation	Limits on strength and dimensional stability during irradiation; assumption that dimensional stability also includes anisotropy.	M	L	2.3.1.1 2.3.1.2	Issue covered by existing DDN.
V4-6-42	Oxidation	Long-term exposure to low partial pressure of oxygen and more rapid oxidation during air ingress.	M	M	2.3.1.1 2.3.1.2	Issue covered by existing DDN.
V4-6-43	Composites structural design methodology limitations for new structures (lack of experience)	Carbon–carbon composites are prime candidates, but need approved method of designing, proof testing, model testing, testing standards, and validation tests.	H	L	2.3.1.1 2.3.1.2	Issue requires modification of existing DDN - Specify development of qualified fabrication and qualification/verification methods.

Table 4-5 continued (High Temperature Materials)

AREVA PIRT ID No.	Issue (Phenomena, Process, etc)	Description	Importance	Knowledge	Associated AREVA DDN Number	Rationale
Control Rods (metallic)						
V4-6-44	Radiation degradation (embrittlement/swelling/radiation creep)	Insertion issue particularly for alloy 800H re low-dose ductility reduction, and dimensional changes associated with Ni-alloy based swelling and radiation-induced creep at moderately low doses.	M	M	2.2.3.1	Issue requires modification of existing DDN - Expand to include radiation effects on material properties, including ductility and dimensional change.
V4-6-45	Loss of strength at high temperatures (transient)	Potential for temperature to exceed short-term strength of metallic materials.	M	M	2.2.3.1	Issue requires modification of existing DDN - extend high temperature testing to include transient temperatures seen by control rods.
RPV Internals (metallic)						
V4-6-46	Change in emissivity	To ensure passive safety, high emissivity is required to limit core temperatures (affect coolant pathway)—need for high emissivities on both surfaces of the core barrel, and formation and control of surface layers in helium environments).	H	L	2.2.3.1	Issue requires modification of existing DDN - Specify that emissivity testing must consider expected changes throughout operational lifetime.
V4-6-47	Radiation-creep	Irradiation creep and dimensional changes particularly for alloy 800H at moderately low-dose should be assessed.	H	L	2.2.3.1	Issue requires modification of existing DDN - Specify irradiation creep tests amongst listed tests.
V4-6-48	Radiation-induced embrittlement	Particular issue for alloy 800H regarding moderate low-dose ductility reduction.	M	M	2.2.3.1	Issue requires modification of existing DDN - Specify irradiation embrittlement amongst listed tests.

Table 4-5 continued (High Temperature Materials)

AREVA PIRT ID No.	Issue (Phenomena, Process, etc)	Description	Importance	Knowledge	Associated AREVA DDN Number	Rationale
V4-6-49	Creep, creep crack growth, thermal loading	Cracking or failure of graphite can cause a hot plume/stream to impinge on the core barrel and cause a local hot spot, but may be difficult due to low (to zero) pressure differential and high pathway resistance. However, the consequence of this affecting the core geometry or providing a pathway for external leakage is highly unlikely.	L	M	N/A	Issue of low importance - no further data needed.
RPV Internals (nonmetallic)						
V4-6-50	Radiation-induced degradation	Need to assess effects on strength, fracture, dimensional stability, and thermo-physical properties during irradiation.	M	L	2.3.2.1	Issue covered by existing DDN.
V4-6-51	Oxidation	Effects of long-term exposure to low partial pressure of oxygen and more rapid oxidation during air ingress must be assessed. Oxidation effects for irradiated composites and carbon insulation are unknown.	M	M	2.3.2.1	Issue covered by existing DDN.
V4-6-52	Composites structural design and fabrication methodology limitations for new structures (lack of experience)	Carbon–carbon composites are prime candidates, but need approved methods for designing, proof testing, model standard testing, validation tests, and probabilistic methods of design. Scalability and fabrication issues must be addressed. Large-scale (meters in diameter) structures as well as smaller ones must be covered.	H	L	2.3.2.1	Issue requires modification of existing DDN - Expand to include consideration of fabrication and qualification/verification methods.

Table 4-5 continued (High Temperature Materials)

AREVA PIRT ID No.	Issue (Phenomena, Process, etc)	Description	Importance	Knowledge	Associated AREVA DDN Number	Rationale
V4-6-53	Environmental and radiation degradation and thermal stability at temperature	Concern is fibrous insulation degradation. Relatively low dose and exposure is expected, but loss of-forced circulation (LOFC) can result in temperatures high enough to challenge stability of fibrous insulation such as Kaowool. Need to assess effects on microstructural stability and thermo-physical properties during irradiation and high temperature exposure in impure helium.	H	L	2.3.6.1	Issue requires modification of existing DDN – Specify assessment of insulation degradation under high temperature and irradiation.
Reactor Cavity Cooling System (RCCS)						
V4-6-54	Aqueous corrosion and fouling	Potential concern of water ingress into RPV and failure of RCCS due to aqueous corrosion.	L	H	N/A	Issue of low importance - no further data needed.
Auxiliary Shutdown System						
V4-6-55	Fatigue, corrosion-fatigue, stress corrosion cracking, crack initiation and subcritical crack growth, high cycle fatigue	Potential concern of water ingress into RPV and failure of RCCS due to aqueous corrosion.	L	H	N/A	Issue not relevant to selected NGNP concept. RCCS is not coupled to the RPV.
Valves						
V4-6-56	Isolation valve failure	Isolation valve failure (includes categories such as self-welding, galling, seizing) is possible. Concerns about isolation valves are similar to 'breach to secondary' issues on IHX since they would provide barriers to secondary heat transport system.	H	L	N/A	Issue not relevant to selected NGNP concept. There are no isolation valves in the main gas heat transport system.

Table 4-5 continued (High Temperature Materials)

AREVA PIRT ID No.	Issue (Phenomena, Process, etc)	Description	Importance	Knowledge	Associated AREVA DDN Number	Rationale
V4-6-57	Valve failure	Concerns about a variety of valve failure mechanisms that will be design-dependent (includes categories such as self-welding, galling, seizing) will need to be assessed once design-specific details are available. Helium-tribology issues must be considered. Allowable identified and unidentified coolant leakage must be established.	H	L	N/A	Issue not relevant to selected NGNP concept.
Reactor Cavity Cooling System (RCCS)						
V4-6-58	Change in RCCS Panel Emissivity	Concern is reduction in the ability to remove heat during an accident scenario.	M	H	N/A	Issue covered by existing/established data.

Table 4-6: Graphite PIRT-to-DDN Reconciliation

AREVA PIRT ID No.	Issue (Phenomena, Process, etc)	Description	Importance	Knowledge	Associated AREVA DDN Number	Rationale
V5-5-1	Statistical variation of non-irradiated properties	Variability in properties (textural and statistical); isotropic. Probabilistic approach use is prudent. Purity level; implications for chemical attack, degradation, decommissioning.	H	M	2.4.1.0	Issue covered by existing DDN.
V5-5-2	Consistency in graphite quality over the lifetime of the reactor fleet (for replacement, for example).	Consistency in graphite quality over the lifetime of the reactor fleet (for replacement, for example). Over multiple reactor fleet, and over the lifetime of any reactor.	H	M	2.4.1.0	Issue covered by existing DDN.
V5-5-3	Graphite contains inherent flaws	Need methods for flaw evaluation.	M	M	2.4.1.0	Issue covered by existing DDN.
V5-5-4	Cyclic fatigue (non-irradiated)	Structural reliability	M	M	2.4.1.0	Issue covered by existing DDN.
V5-5-5(a)	Temperature dependence of non-irradiated thermal properties.	No Entry	H	H	N/A	Issue covered by existing/established data.
V5-5-5(b)	Temperature dependence of non-irradiated mechanical properties.	No Entry	L	H	N/A	Issue of low importance - no further data needed.
V5-5-6	Irradiation induced dimensional change	Largest source of internal stress	H	M	2.4.1.0	Issue covered by existing DDN.
V5-5-7	Irradiation induced creep (irradiation induced dimensional change under stress).	Could potentially reduce significantly internal stress?	H	L	2.4.1.0	Issue covered by existing DDN.

Table 4-6 continued (Graphite)

AREVA PIRT ID No.	Issue (Phenomena, Process, etc)	Description	Importance	Knowledge	Associated AREVA DDN Number	Rationale
V5-5-8	Irradiation induced thermal conductivity change.	Thermal conductivity lower than required by design basis for LBE heat removal due to (a) inadequate database to support design over component lifetime and (b) variations in characteristics of graphites from lot to lot; potential is to exceed fuel design temperatures during LBEs.	H	M	2.4.1.0	Issue covered by existing DDN.
V5-5-9	Irradiation induced changes in elastic constants, including the effects of creep strain.	No Entry	H	M	2.4.1.0	Issue covered by existing DDN.
V5-5-10	Irradiation induced change in CTE, including the effects of creep strain.	No Entry	H	L	2.4.1.0	Issue requires modification of existing DDN - Specifically include changes in CTE under listing of irradiation effects studied.
V5-5-11	Irradiation induced changes in mechanical properties (strength, toughness), including the effect of creep strain (stress).	Tensile, bend, compression, shear (multi-axial), stress strain relationship, fracture, and fatigue strength.	H	L	2.4.1.0	Issue covered by existing DDN.
V5-5-12	Stored energy release	Above 350°C, this is not an issue. Low temperature release of stored energy is not an issue. The reported minimal high temperature reduction (due to irradiation) of specific heat needs to be confirmed by additional experiments and analyses.	L	M	N/A	Issue not relevant to selected NGNP concept. Plant operates well above threshold temperature.

Table 4-6 continued (Graphite)

AREVA PIRT ID No.	Issue (Phenomena, Process, etc)	Description	Importance	Knowledge	Associated AREVA DDN Number	Rationale
V5-5-13	Annealing of thermal conductivity	During accident improves heat conduction, has implications for maintaining fuel temperature limit.	M	M	2.4.1.0	Issue covered by existing DDN.
V5-5-14	Oxidation of graphite dust	See report: A. Wickham (EPRI report)	M	H	N/A	Issue covered by existing/established data.
V5-5-15	Graphite dust generation	Tribological behavior in helium, f(temperatures, pressure, fluence). Dust particle size distribution.	M	L	2.4.1.0	Issue covered by existing DDN.
V5-5-16	Potential changes in irradiated graphite emissivity	Emissivity, f(oxidation, surface roughness).	L	H	N/A	Issue of low importance - no further data needed.
V5-5-17	Tribology of graphite in (impure) helium environment	No Entry	H	M	2.1.1.0	Issue covered by existing DDN.
V5-5-18	Irradiation induced change in graphite pore structure.	Link to FPT panel.	M	M	2.4.1.0	Issue requires modification of existing DDN - Expand to include microstructural characteristics in list of study topics.
V5-5-19	Temperature dependent release of FP from graphite.	Link to FPT panel	L	L	N/A	Issue of low importance - no further data needed.
V5-5-20	Oxidation of irradiated graphite, including potential adsorbed/absorbed FP.	Irradiated graphite will have degraded structure, potentially having enhanced oxidation; it will release FP and a link to FP transport.	M	H	N/A	Issue covered by existing/established data.

Table 4-6 continued (Graphite)

AREVA PIRT ID No.	Issue (Phenomena, Process, etc)	Description	Importance	Knowledge	Associated AREVA DDN Number	Rationale
V5-6-21	Degradation of thermal conductivity	Has implications for fuel temperature limit for loss-of-forced cooling accident.	H	M	2.4.1.0	Issue covered by existing DDN.
V5-6-21(a)	Degradation of thermal conductivity	Has implications for maintaining temperature limits for adjacent (metal) components.	M	M	2.4.1.0	Issue covered by existing DDN.
V5-6-22	Annealing of thermal conductivity	During accident improves heat conduction, has implications for maintaining fuel temperature limit.	M	M	2.4.1.0	Issue covered by existing DDN.
V5-6-22(a)	Annealing of thermal conductivity	During accident improves heat conduction-detrimental to adjacent metallic component temperature.	M	M	2.4.1.0	Issue covered by existing DDN.
V5-6-23	Stored energy release	Above 350°C, this is not an issue. Low temperature release of stored energy is not an issue. The reported minimal high temperature reduction (due to irradiation) of specific heat needs to be confirmed by additional experiments and analyses	L	M	N/A	Issue not relevant to selected NGNP concept.
V5-6-24	Blockage of fuel element coolant channel	Results in increased fuel temperature in localized areas.	No Entry	No Entry	No Entry	No Entry

Table 4-6 continued (Graphite)

AREVA PIRT ID No.	Issue (Phenomena, Process, etc)	Description	Importance	Knowledge	Associated AREVA DDN Number	Rationale
V5-6-25(a)	Foreign object (debris)	Broken pieces of non-graphite core components, such as ceramic tie-rods, etc. Tied to high-temperature materials [carbon fiber composite (CFC)]	M	M	N/A	Issue will be resolved in normal design work.
V5-6-25(b)	Due to graphite failure, spalling	Debris generated from within the graphite core structures.	H	L	N/A	Issue will be resolved in normal design work.
V5-6-25(c)	Channel distortion	Deformation from individual graphite blocks and block assemblies. There is a link to the metallic core support structure.	M	M	N/A	Issue will be resolved in normal design work.
V5-6-26	Blockage of reflector block coolant channel	Results in reduced thermal capacity of the core during accident conditions	No Entry	No Entry	No Entry	No Entry
V5-6-26(a)	Foreign object (debris)	Broken pieces of non-graphite core components, such as ceramic tie-rods, etc. Collapse of upper insulation and deposition onto channel (PCR). Tied to high-temperature materials (hanger rods).	M	M	N/A	Issue will be resolved in normal design work.
V5-6-26(b)	Due to graphite failure, spalling	Debris generated from within the graphite core structures.	M	L	N/A	Issue will be resolved in normal design work.
V5-6-26(c)	Channel distortion	Deformation from individual graphite blocks and block assemblies. There is a link to the metallic core support structure.	M	M	N/A	Issue will be resolved in normal design work.
V5-6-27	Blockage of coolant channel in reactivity control block	Results in damage to the reactivity control components; physical misalignment of channel interfaces.	No Entry	No Entry	No Entry	No Entry
V5-6-27(a)	Foreign object (debris)	Broken pieces of non-graphite core components, such as ceramic tie-rods, etc. Tied to high- temperature materials [carbon fiber composite (CFC)].	M	M	N/A	Issue will be resolved in normal design work.
V5-6-27(b)	Due to graphite failure, spalling	Debris generated from within the graphite core structures.	H	L	N/A	Issue will be resolved in normal design work.

Table 4-6 continued (Graphite)

AREVA PIRT ID No.	Issue (Phenomena, Process, etc)	Description	Importance	Knowledge	Associated AREVA DDN Number	Rationale
V5-6-27(c)	Channel distortion	Deformation from individual graphite blocks and block assemblies. There is a link to the metallic core support structure.	M	M	N/A	Issue will be resolved in normal design work.
V5-6-28	Blockage of reactivity control channel	Results in inability to freely insert absorber materials.	No Entry	No Entry	No Entry	No Entry
V5-6-28(a)	Foreign object (debris)	Broken pieces of non-graphite core components, such as ceramic tie-rods, etc. Tied to high- temperature materials [carbon fiber composite (CFC)].	M	M	N/A	Issue will be resolved in normal design work.
V5-6-28(b)	Due to graphite failure, spalling	Debris generated from within the graphite core structures.	H	M	N/A	Issue will be resolved in normal design work.
V5-6-28(c)	Channel distortion	Deformation from individual graphite blocks and block assemblies.	M	M	N/A	Issue will be resolved in normal design work.
V5-6-29	Increased bypass coolant flow channels by break, distortion, etc.	Due to channel distortion, cracking in graphite bricks, etc. Reduced coolant flow through fuel requires higher fuel temperature to maintain the same core outlet temperature.	M	M	N/A	Issue will be resolved in normal design work.
V5-6-30	Increased bypass coolant flow channels by break, distortion, etc.	If the bypass is near to the adjacent metallic structures, this phenomenon may challenge the temperature limit of metallic structures.	M	M	N/A	Issue will be resolved in normal design work.
V5-6-31	Outlet plenum collapse	Gross collapse of structures that define the core outlet plenum.	No Entry	No Entry	No Entry	No Entry
V5-6-31(a)	Outlet plenum collapse	Disrupts heat conduction path.	H	H	N/A	Issue will be resolved in normal design work.
V5-6-31(b)	Outlet plenum collapse	Potentially distortion/displacement of reactivity control channels.	H	H	N/A	Issue will be resolved in normal design work.
V5-6-31(c)	Outlet plenum collapse	Disrupts coolant flow path	H	H	N/A	Issue will be resolved in normal design work.

Table 4-6 continued (Graphite)

AREVA PIRT ID No.	Issue (Phenomena, Process, etc)	Description	Importance	Knowledge	Associated AREVA DDN Number	Rationale
V5-6-31(d)	Outlet plenum collapse	Could potentially result in excessive mechanical load in the fuel.	H	H	N/A	Issue will be resolved in normal design work.
V5-6-32	Chemical attack	During air/moisture ingress accident, chemical impurities in graphite have effect on the rate of chemical attack.	No Entry	No Entry	No Entry	No Entry
V5-6-32(a)	Catastrophic chemical attack.	Excessive change in component geometry, such as reduction in cross section, due to large and sustained chemical attack.	H	H	2.4.1.0	Issue covered by existing DDN.
V5-6-32(b)	Effect of chronic chemical attack on properties.	Change in graphite pore structure due to (slow) chemical attack over long period of time. Degradation of strength, thermal conductivity, Young's modulus. CTE not relevant as per existing data (University of Bath). The consequences have been dealt with for phenomena 12, 13, 14, 15, 16, and 17.	M	M	2.4.1.0	Issue covered by existing DDN.
V5-6-33	External (applied) loads	Can become significant if not properly addressed in design. For example, heat up (thermal expansion of core barrel, deformation of the integrated, whole-core graphite structure, dimensional change). Consequences of this phenomena have been addressed in other (e.g., 12 through 17)	M	M	N/A	Issue will be resolved in normal design work.
V5-6-34	Fast neutron fluence	All graphite component life (structural integrity) predictions rely on an accurate time and spatial calculation of fast neutron fluence (data supplied to graphite specialists by reactor physicists).	H	H	N/A	Issue will be resolved in normal design work.

Table 4-6 continued (Graphite)

AREVA PIRT ID No.	Issue (Phenomena, Process, etc)	Description	Importance	Knowledge	Associated AREVA DDN Number	Rationale
V5-6-35	Gamma and neutron heating	About 5% of the heat in the reactor is generated in the graphite due to gamma and neutron heating. Predictions of the graphite temperatures for use in structural integrity calculations rely on this quantity. Accurate calculation of the spatial distribution of gamma and neutron heating is required to be supplied to the graphite specialist by reactor physicist.	H	H	N/A	Issue will be resolved in normal design work.
V5-6-36	Graphite temperatures	All graphite component life and transient calculations (structural integrity) require time dependent and spatial predictions of graphite temperatures. Graphite temperatures for normal operation and transients are usually supplied to graphite specialists by thermal-hydraulics specialist. Although in some cases gas temperatures and heat transfer coefficients are supplied, and the graphite specialist calculates the graphite temperatures from these.	H	M	N/A	Issue will be resolved in normal design work.

Table 4-7: Process Heat and Hydrogen Production PIRT-to-DDN Reconciliation

AREVA PIRT ID No.	Issue (Phenomena, Process, etc)	Description	Importance	Knowledge	Associated AREVA DDN Number	Rationale
Chemical Releases						
V6-4.1-1	H2 Release Blast Effects	Damage to SCCs	M	H	NA	Issue covered by existing/established data.
V6-4.1-2	H2 Release Heat Flux	Damage to SCCs	L	M	NA	Issue of low importance - no further data needed.
V6-4.1-3	H2 Release Burn and heat flux to people	VHTR plant operator impairment	L	M	NA	Issue of low importance - no further data needed.
V6-4.1-4	O2 Release Plume Behavior	Damage to SCCs. Ground hugging gas movement? Oxygen may be released during normal operation so there is also a significant concern about routine non-accident behavior.	H	H	NA	Issue covered by existing/established data.
V6-4.1-5	O2 Release Allowable Concentrations	Damage to SCCs. What oxygen levels cause damage?	H	M	NA	We believe adequate data will be available for these chemical applications. If data is not available, then additional R&D will be required for the relevant chemical plants.
V6-4.1-6	O2 Release Spontaneous Combustion	Damage to SCCs. What levels cause spontaneous combustion?	H	M	NA	We believe adequate data will be available for these chemical applications. If data is not available, then additional R&D will be required for the relevant chemical plants.

Table 4-7 continued (Process Heat and Hydrogen Production)

AREVA PIRT ID No.	Issue (Phenomena, Process, etc)	Description	Importance	Knowledge	Associated AREVA DDN Number	Rationale
V6-4.1-7	O2 Release Burn to VHTR Operators	Operator Impairment	M	M	NA	We believe adequate data will be available for these chemical applications. If data is not available, then additional R&D will be required for the relevant chemical plants.
V6-4.1-8	Flammable Release Plume Behavior	Damage to SCCs. How far away from leak explosion occurs (dispersion?).	M	H	NA	Issue covered by existing/established data.
V6-4.1-9	Flammable Release Heat Flux	Damage to SCCs. Design of equipment should eliminate this mode. Carbon-based fire is serious. Carbon atoms (soot) radiate large heat fluxes.	M	H	NA	Issue covered by existing/established data.
V6-4.1-10	Flammable Release Blast Effects	Damage to SCCs. Fuel/air mixture dependent upon stoichiometric mixture, vaporization, conditions, etc.	M	H	NA	Issue covered by existing/established data.
V6-4.1-11	Flammable Release Burns to people	VHTR plant operator impairment.	M	H	NA	Issue covered by existing/established data.
V6-4.1-12	Corrosive Release Plume Behavior	Damage to SCCs. Ground hugging gas movement?	M	H	NA	Issue covered by existing/established data.
V6-4.1-13	Corrosive Release Allowable Concentrations	Damage to SCCs. What chemical levels cause damage?	M	M	NA	We believe adequate data will be available for these chemical applications. If data is not available, then additional R&D will be required for the relevant chemical plants.

Table 4-7 continued (Process Heat and Hydrogen Production)

AREVA PIRT ID No.	Issue (Phenomena, Process, etc)	Description	Importance	Knowledge	Associated AREVA DDN Number	Rationale
V6-4.1-14	Corrosive Release Burns to People	VHTR plant operator impairment.	M	M	NA	We believe adequate data will be available for these chemical applications. If data is not available, then additional R&D will be required for the relevant chemical plants.
V6-4.1-15	Toxic Gas Release Plume Behavior	Operator impairment. Ground hugging gas movement?	M	M	NA	We believe adequate data will be available for these chemical applications. If data is not available, then additional R&D will be required for the relevant chemical plants.
V6-4.1-16	Toxic Concentrations and Effects	VHTR plant operator impairment.	M	M	NA	We believe adequate data will be available for these chemical applications. If data is not available, then additional R&D will be required for the relevant chemical plants.
V6-4.1-17	Suffocation Gas Release Plume Behavior	Damage to SCCs. Ground hugging gas movement?	M	H	NA	Issue covered by existing/established data.
V6-4.1-18	Suffocation Gas Release Backup Power/O2 Concentrations	Damage to SCCs. Assume diesel generator part of safety system.	M	H	NA	Issue covered by existing/established data.

Table 4-7 continued (Process Heat and Hydrogen Production)

AREVA PIRT ID No.	Issue (Phenomena, Process, etc)	Description	Importance	Knowledge	Associated AREVA DDN Number	Rationale
V6-4.1-19	Suffocation Gas Release Concentration for People	VHTR plant operator impairment.	M	H	NA	Issue covered by existing/established data.
Process Thermal Events						
V6-4.1-20	Loss of Heat Sink to Reactor	Loss of Heat Load (chemical plant reduces heat consumption with diminished heat removal from the intermediate loop - return intermediate heat transfer fluid at higher temp.) Guillotine break in loops, and coolant leaks out.	M	M	NA	Issue will be resolved in normal design work.
V6-4.1-21	Cyclic Loading	Temperature Transient (transferred to intermediate loop). Concern about batch processes with cyclic heat demand: issue for materials panel. Note: These rankings could possibly be different if larger process heat loads are involved.	M	M	NA	Issue will be resolved in normal design work.
V6-4.1-22	Harmonics	Temperature Transient (transferred to intermediate loop). Coupling of chemical plant control system with NGNP	L	M	NA	Issue of low importance - no further data needed.
Heat Transport System Failures						
V6-4.1-23	Blowdown Effects, Large Mass Transfer, Pressurization of Either Secondary or Primary Side	IHX failure (intermediate heat exchanger). Fluid hammer.	H	M	4.1.2.1	IHX not used for the reference design. For a SG tube failure, this issue is covered by an existing DDN.
V6-4.1-24	Fuel and Primary System Corrosion	PHX failure (Process Heat Exchanger)	H	M	NA	Issue not relevant to selected NGNP concept.

Table 4-7 continued (Process Heat and Hydrogen Production)

AREVA PIRT ID No.	Issue (Phenomena, Process, etc)	Description	Importance	Knowledge	Associated AREVA DDN Number	Rationale
V6-4.1-25	Turbomachinery Response Potential for N_2He Mixture	Mass addition to reactor (He). Rapid change in the load of the turbo-machinery and the dynamic response.	M	M	NA	Issue not relevant to selected NGNP concept.
V6-4.1-26	Reactivity Spike due to Neutron Thermalization	Mass Addition to Reactor (Hydrogenous Material, e.g., Steam). Power spike in fuel grains, could lead to TRISO-failure with prolonged high temperature.	H	M	NA	Issue will be resolved in normal design work.
V6-4.1-27	Chemical Attack of TRISO Layers and Graphite	Mass Addition to Reactor (Hydrogenous Material, e.g., Steam). Steam and graphite react; TRISO.	H	M	2.4.1.0 1.3.1.0	Graphite issues covered by existing DDN. Fuel issues require new DDN.
V6-4.1-28	Loss of Heat Sink Cooling, then no Heat Sink IHX Hydrodynamic Loading	Loss of Intermediate Fluid. Rapid pulse cooling of reactor during depressurization of intermediate loop and IHX	H	M	NA	Issue not relevant to selected NGNP concept.
VHTR Events that Impact Chemical Plant						
V6-4.1-29	Diffusion of 3H	Classic tritium diffusion (permeation?). Dose to VHTR Plant Workers	L	H	NA	Issue covered by existing/established data.
V6-4.1-30	Diffusion of 3H	Classic tritium diffusion (permeation?). Dose to Process Gas Users: Industrial and Consumers	L	H	NA	Issue covered by existing/established data.
V6-4.1-31	Accident Radionuclide Release	Bypass of filter and containment. Radiological Release Pathways Through HX Loops and Plant	M	M	4.1.4.1	Issue covered by existing DDN.
V6-4.1-32	Stress causes stress on other SSC component	Generic Power or Thermal Transients Initiated in VHTR. Stress on IHX or Other Component in Contact with BOP	L	M	NA	Issue of low importance - no further data needed.

Table 4-8: Fuel PIRT-to-DDN Reconciliation

AREVA PIRT ID No.	Issue (Phenomena, Process, etc)	Description	Importance	Knowledge	Associated AREVA DDN Number	Rationale
VF-N-1	Manufacturing: Kernel Properties	Fuel kernel properties resulting from characteristics of the manufacturing process. Ranges of values for these properties which have been linked to acceptable operational performance help define acceptable manufacturing processes.	No Entry	No Entry	1.2.1.0 1.2.2.0	Issue covered by existing DDN.
VF-N-2	Manufacturing: Coating Process	Coating process specifications important to successful production of acceptable coated particles	No Entry	No Entry	1.1.2.1 1.1.2.2	Issue covered by existing DDN.
VF-N-3	Manufacturing: Coating Properties	Particle coating properties resulting from characteristics of the manufacturing process. Ranges of values for these properties which have been linked to acceptable operational performance help define acceptable manufacturing processes.	No Entry	No Entry	1.2.1.0 1.2.2.0	Issue covered by existing DDN.
VF-N-4	Manufacturing: Compact/Pebble	Process specifications and final product characteristics which are required to provide acceptable operational performance of the fuel compact or pebble.	No Entry	No Entry	1.2.1.0 1.2.2.0	Issue covered by existing DDN.
VF-N-5	Kernel: CO Production	Production of CO within the kernel and by kernel-to-buffer interactions during normal operation and accident conditions	No Entry	No Entry	4.1.3.1 4.2.3.1	Issue covered by existing DDN.
VF-N-6	Kernel: Microstructural Changes	Changes in kernel microstructure under normal operation and accident conditions	No Entry	No Entry	4.1.3.1 4.2.3.1	Issue covered by existing DDN.
VF-N-7	Kernel: Temperature and Energy Transport	Kernel energy production and temperature conditions under normal operation and accident conditions	No Entry	No Entry	N/A	Issue will be resolved in normal design work.

Table 4-8 continued (Fuel)

AREVA PIRT ID No.	Issue (Phenomena, Process, etc)	Description	Importance	Knowledge	Associated AREVA DDN Number	Rationale
VF-N-8	Kernel: Fission Product Behavior	Concentration, chemical and physical state of fission products within the kernel	No Entry	No Entry	4.1.3.1 4.2.3.1	Issue covered by existing DDN.
VF-N-9	Kernel: Isotopic Mass Transport	Mobility of oxygen and fission products within the kernel	No Entry	No Entry	4.1.3.1 4.2.3.1	Issue covered by existing DDN.
VF-N-10	Kernel: Oxidation	Oxidation behavior of the kernel under air and water ingress conditions, including oxidation rates and impacts on kernel properties	No Entry	No Entry	1.3.1.0	Issue requires new DDN.
VF-N-11	Buffer: Gas concentration and pressure evolution	Evolution of gas pressures in the buffer during normal operation	No Entry	No Entry	4.1.3.1 4.2.3.1	Issue covered by existing DDN.
VF-N-12	Buffer: Fission Product Behavior	Uptake and transport of fission products within and through the buffer layer during normal operation and accident conditions	No Entry	No Entry	4.1.3.1 4.2.3.1	Issue covered by existing DDN.
VF-N-13	Buffer: Mechanical Performance	Mechanical changes in the buffer due to thermal and irradiation effects during normal operation and accidents	No Entry	No Entry	4.1.3.1 4.2.3.1	Issue covered by existing DDN.
VF-N-14	Buffer: Temperatures	Temperatures in the buffer during normal operation and accidents	No Entry	No Entry	N/A	Issue will be resolved in normal design work.
VF-N-15	Buffer: Oxidation	Oxidation of the buffer, and associated property changes, due to interactions with the kernel and fission products as well as air and water during certain accident scenarios.	No Entry	No Entry	1.3.1.0	Issue requires new DDN.
VF-N-16	Inner PyC: Mechanical Performance	Mechanical changes in the Inner PyC due to thermal and irradiation effects during normal operation and accidents	No Entry	No Entry	4.1.3.1 4.2.3.1	Issue covered by existing DDN.
VF-N-17	Inner PyC: Fission Product Behavior	Uptake and transport of fission products within and through the Inner PyC layer during normal operation and accident conditions	No Entry	No Entry	4.1.3.1 4.2.3.1	Issue covered by existing DDN.

Table 4-8 continued (Fuel)

AREVA PIRT ID No.	Issue (Phenomena, Process, etc)	Description	Importance	Knowledge	Associated AREVA DDN Number	Rationale
VF-N-18	Inner PyC: Oxidation	Oxidation of the Inner PyC, and associated property changes, due to interactions with the kernel and fission products as well as air and water during certain accident scenarios.	No Entry	No Entry	1.3.1.0	Issue requires new DDN.
VF-N-19	SiC: Chemical Interactions	Interactions between the SiC layer and chemical species which may impact the integrity of the layer as a fission product barrier. Of particular concern are metallic fission products, especially Pd, and kernel material (in the event of contact between the kernel and the SiC layer).	No Entry	No Entry	4.1.3.1 4.2.3.1	Issue covered by existing DDN.
VF-N-20	SiC: Defect Fission Product Release	Fission product release characteristics through both undetected manufacturing defects and failures during operation	No Entry	No Entry	4.1.3.1 4.2.3.1	Issue covered by existing DDN.
VF-N-21	SiC: Mechanical Performance	Mechanical changes in the SiC layer due to thermal and irradiation effects during normal operation and accidents	No Entry	No Entry	4.1.3.1 4.2.3.1	Issue covered by existing DDN.
VF-N-22	SiC: Fission Product Behavior	Uptake and transport of fission products within and through the SiC layer during normal operation and accident conditions	No Entry	No Entry	4.1.3.1 4.2.3.1	Issue covered by existing DDN.
VF-N-23	SiC: Oxidation	Oxidation of the SiC layer, and associated property changes, due to interactions with the kernel and fission products as well as air and water during certain accident scenarios.	No Entry	No Entry	1.3.1.0	Issue requires new DDN.
VF-N-24	Outer PyC: Mechanical Performance	Mechanical changes in the Outer PyC layer due to thermal and irradiation effects during normal operation and accidents	No Entry	No Entry	4.1.3.1 4.2.3.1	Issue covered by existing DDN.

Table 4-8 continued (Fuel)

AREVA PIRT ID No.	Issue (Phenomena, Process, etc)	Description	Importance	Knowledge	Associated AREVA DDN Number	Rationale
VF-N-25	Outer PyC: Fission Product Behavior	Uptake and transport of fission products within and through the Outer PyC layer during normal operation and accident conditions	No Entry	No Entry	4.1.3.1 4.2.3.1	Issue covered by existing DDN.
VF-N-26	Outer PyC: Oxidation	Oxidation of the Outer PyC layer, and associated property changes, due to interactions with the kernel and fission products as well as air and water during certain accident scenarios.	No Entry	No Entry	1.3.1.0	Issue requires new DDN.
VF-N-27	Fuel Element: Operational Performance	Operational performance parameters which describe the temperature, power and fluence conditions experienced by he fuel element during both normal operation and accidents	No Entry	No Entry	N/A	Issue will be resolved in normal design work.
VF-N-28	Fuel Element: Fission Product Behavior	Uptake and transport of fission products within and through the Fuel Element during normal operation and accident conditions	No Entry	No Entry	2.4.2.0	Issue requires new DDN.
VF-N-29	Fuel Element: Oxidation/Corrosion	Oxidation or corrosion of the Fuel Element, and associated property changes, due to interactions with the kernel and fission products as well as air and water during certain accident scenarios.	No Entry	No Entry	1.3.1.0	Issue requires new DDN.

Table 4-9: Updated DDN List Based on PIRT Reconciliation

Section	AREVA DDN Number	DDN Title	Description	Notes
1	**Fuel**			
1.1	**Fuel Development**			
1.1.1	**Kernel**			
	1.1.1.1	Kernel Materials	Develop advanced carbon source for UCO kernel production. Test materials in pilot-facility fabricating UCO kernels.	
	1.1.1.2	Kernel Manufacturing	Develop advanced kernel wash and dry system to effectively increase throughput of kernel line with no degradation in kernel quality. Develop enhanced sintering for either UCO (large fluidized bed sintering) or UO2 (static bed sintering) with a focus on increased throughput and reduced cost.	
1.1.2	**Coating**			
	1.1.2.1	Coating Materials	Not used	R&D need of coating materials qualification has been included in 1.1.3.1 and 1.1.3.2.
	1.1.2.2	Coating Manufacturing	Investigate largest coating batches size capable in existing 6" coating retort. Determine economic feasibility of using a 6" retort for production.	Acceptability of coatings should initially be based on physical characteristics of the coatings after manufacture. Should a larger coater be required, plan on implementing the R&D of that coater as part of the facility expansion for production.
1.1.3	**Compact**			
	1.1.3.1	Compact Materials	Select graphitic matrix, resin, etc. to produce thermosetting compacts. Demonstrate performance of compacts under normal and off-normal accident conditions.	

Table 4-9 continued (Updated DDN List Based on PIRT Reconciliation)

Section	AREVA DDN Number	DDN Title	Description	Notes
	1.1.3.2	Compact Manufacturing	Establish compact manufacturing capabilities in the US based on the AREVA process. Develop (or confirm) compact pressures and temperatures to minimize fuel damage. Develop heat treat process to ensure complete graphitization of the matrix material. Perform irradiation tests on compacts to demonstrate performance for nominal and off-nominal operating conditions. Recommend expansion of BWXT fuel line for compacts.	
1.1.4	**Fuel Mass Production**			
	1.1.4.1	Fuel Mass Production	R&D should focus on areas where product uniformity and quality are most at jeopardy. Initial R&D should focus on kernel wash & dry, sintering, coating (assuming larger than 6" coater required), compact matrix formulation, and compact fabrication. Irradiation testing will be required to confirm fuel performance matches performance from the laboratory/pilot facilities. Some chemical processing areas or the process will require significant scale-up to meet production demands.	
1.2	**Fuel Qualification**			
	1.2.1.0	Quality Control Methods	Develop highly reliable instrumentation and data acquisition software to ensure fuel particle quality is built into the fuel. Capture essential data for fuel certification.	

Table 4-9 continued (Updated DDN List Based on PIRT Reconciliation)

Section	AREVA DDN Number	DDN Title	Description	Notes
	1.2.2.0	Inspection Techniques	Develop QC inspection techniques that directly relate to irradiation performance. Develop techniques for large-scale production capabilities that minimize the quantity of materials that require destructive evaluation to ensure statistically acceptable fuel is produced. Irradiation testing of the compacts to attempt to relate as-measured attributes actually correlated to performance would be necessary to ensure the correct attributes are being measured and characterized.	Techniques to be investigated could be: micro focus x-ray of particles (dimensional inspection of particle layers), mercury porosymetry (buffer density), sink-float (IPyC, SiC, and OPyC density), anisotropy measurements of the IPyC and OPyC layers, leach-burn-leach test or weak irradiation techniques (particle leak tightness), etc. Many QC techniques need to be developed with mass production in mind.
1.3	**Fuel Materials**			
	1.3.1.0	Fuel Oxidation Under Water/Air Ingress	Evaluate the need for additional data for oxidation behavior of the kernel, buffer, IPyC, SiC, OPyC, compact, and Fuel element, including associated property changes, due to interactions with the kernel and fission products as well as air and water during certain accident scenarios. Develop additional data as needed.	
	1.3.2.0	Fuel Compact Properties and FP Interactions	Determine key fuel compact matrix properties, including permeability and tortuosity, which impact fission product transport through the material. Establish an empirical fission product release rate constant for the matrix material. Determine fuel element thermal conductivity.	
	1.3.3.0	FP Speciation During Mass Transfer	Determine chemical speciation of fission products within the primary system and the confinement for differing potential atmospheres, including those encountered during water or air ingress events.	
2	**Materials Development and Qualification**			
2.1	**All Materials**			
	2.1.1.0	Tribology	Perform tribology tests on expected couples of materials in representative HTR conditions.	This type of tests requires dedicated facilities.

Table 4-9 continued (Updated DDN List Based on PIRT Reconciliation)

Section	AREVA DDN Number	DDN Title	Description	Notes
2.2	**Metallic Materials**			
2.2.1	**RPV High Temperature Materials**			
	2.2.1.1	Not used.		
2.2.2	**IHX Materials**			
	2.2.2.1	Not used.		
2.2.3	**Reactor Internal Materials**			
	2.2.3.1	Reactor Internal Materials	For Alloy 800H and Mod 9Cr1Mo: - Emissivity measurement under likely representative state of surface (as-machined and oxidized after machining) including expected changes over the expected component lifetime. - Corrosion behavior under representative primary helium environment. - Irradiation creep, embrittlement and effects on material properties, including ductility and dimensional change. For extension of 800H coverage in ASME III-NH the following items are needed: - Long term tests at temperature higher than 760°C - Material properties tests at transient temperatures seen by control rods. - Extension of allowables to cover 60 years lifetime.	Efforts in progress to extend coverage of alloy 800H up to ASME III-NH. Modified 9Cr1Mo is also a candidate if temperatures are kept below 750°C. Needs for mod 9Cr1Mo are already covered in the R&D needs for the vessel system.

Table 4-9 continued (Updated DDN List Based on PIRT Reconciliation)

Section	AREVA DDN Number	DDN Title	Description	Notes
2.2.4	**RPV Low Temperature Materials**			
	2.2.4.1	RPV Low Temperature Material	Study: - Effect of irradiation. - Creep during high temperature, short duration (100h) excursions - Corrosion in helium environment. - Emissivity (in air and helium, and considering emissivity degradation).	
	2.2.4.2	Field Fabrication of Vessels	Because of vessel size, must address field fabrication process control and property control, including welding, postweld heat treatment, section thickness and preservice inspection.	
2.3	**Ceramic Materials**			
2.3.1	**Control Rods**			
	2.3.1.1	Control Rod Sheaths	Study: - Thermal-physical properties (K, CTE, Cp). - Mechanical properties including multiaxial strength. - Fracture properties. - Fatigue properties. - Behavior under oxidized atmosphere and oxidation effects on properties. - Codification. - Materials envisioned so far are C/C or C/SiC composites. - Test and irradiate component mock-ups (e.g. sample joints) - Development of qualified fabrication and qualification/verification methods.	

Table 4-9 continued (Updated DDN List Based on PIRT Reconciliation)

Section	AREVA DDN Number	DDN Title	Description	Notes
	2.3.1.2	Control Rods (solid ceramic control rod without sheaths)	Study: - Thermal-physical properties (K, CTE, Cp). - Mechanical properties including multiaxial strength. - Fracture properties. - Fatigue properties. - Behavior under oxidized atmosphere and oxidation effects on properties. - Codification. - Materials envisioned so far are C/C or C/SiC composites. - Test and irradiate component mock-ups (e.g. sample joints) - Development of qualified fabrication and qualification/verification methods.	
2.3.2	**Upper Core Restraints**			
	2.3.2.1	Upper Core Restraints	Study: - Thermal-physical properties (K, CTE, Cp). - Mechanical properties including multiaxial strength. - Fracture properties. - Fatigue properties. - Behavior under oxidized atmosphere and oxidation effects on properties. - Codification. - Materials envisioned so far are C/C or C/SiC composites. - Test and irradiate component mock-ups (e.g. sample joints) - Fabrication and qualification/verification methods.	

Table 4-9 continued (Updated DDN List Based on PIRT Reconciliation)

Section	AREVA DDN Number	DDN Title	Description	Notes
2.3.3	**Top Plenum Shroud**			
	2.3.3.1	Not used.		
2.3.4	**Hot Gas Duct Liners**			
	2.3.4.1	Not used.		
2.3.5	**Core Support Insulation Blocks**			
	2.3.5.1	Not used.		
2.3.6	**Ceramic Insulation**			
	2.3.6.1	Ceramic Insulation	Study: - Thermal-physical properties (K, CTE, Cp). - Behavior under high temperature and irradiation conditions. - Behavior under oxidation.	

Table 4-9 continued (Updated DDN List Based on PIRT Reconciliation)

Section	AREVA DDN Number	DDN Title	Description	Notes
2.4	**Graphite Materials**			
	2.4.1.0	Graphite	Study: - Thermal-physical properties (K, CTE, Cp, emissivity). - Mechanical properties including multiaxial strength. - Microstructural characteristics (permeability, tortuosity, pore structure) - Fracture properties. - Fatigue properties. - Irradiation effects on properties including irradiation induced dimensional change, irradiation induced creep, changes in thermal conductivity, changes in CTE, and annealing out of thermal conductivity changes at high temperature. - Behavior under oxidized atmosphere including oxidation effects on properties. - Tribology. - Codification including fracture models. - Graphite oxidation from water ingress. - Graphite oxidation from air ingress. Develop ASME and ASTM codes and standards for graphite essential for timely application of graphite for NGNP reactor. Graphite qualification.	Grades presently under consideration are PCEA, NBG17 and/or NBG18.

Table 4-9 continued (Updated DDN List Based on PIRT Reconciliation)

Section	AREVA DDN Number	DDN Title	Description	Notes
	2.4.2.0	Graphite/Fission Product Interactions	Study the interactions between graphite components and fission products including FP transport through the fuel block, sorbtivity of graphite, fluence effect on transport in graphite, FP speciation in carbonaceous material and during mass transport, absorption and deabsorption on dust. Assess impacts of chemical forms of fission products on transport, holdup and chemical reactivity. Explore development of an effective release rate coefficient (empirical constant) as an alternative to first principles modeling.	
3	**Components Testing**			
3.1	**Helium Loop**			
	3.1.1.0	Primary Gas Circulators	Component qualification tests: - Air tests of the impeller (at scale 0.2 to 0.4). - Helium tests of Magnetic and Catcher bearings. - Tests of the circulator shutoff valve. - Tests and/or evaluations of age-related impeller failure modes (creep, fatigue) - Integrated tests near full-scale of the whole machine should be required on a large He loop, in air at the manufacturer's site or during the NGNP commissioning phase.	
	3.1.2.0	Not used.		
	3.1.3.0	Not used.		
	3.1.4.0	Not used.		

Table 4-9 continued (Updated DDN List Based on PIRT Reconciliation)

Section	AREVA DDN Number	DDN Title	Description	Notes
	3.1.5.0	Hot Gas Ducts	Demonstrate that no significant hot streaks should be expected with the V-shaped metallic concept. Qualification should be performed in 3 steps: - Elementary tests to characterize the fiber conditions, assembly techniques, spacers, etc. - Tests on a small mock-up in a test facility of about 1 MWt or less to validate the fiber specification and the ceramic spacer specification (if possible in He). - Tests on a full scale mock-up in a big test facility in He (around 10 MW). Test should at least cover: - Depressurization tests. - Pressure loss, heat loss, temperature of the support tube (in He conditions). - Leak tightness tests of the connection areas. - Fatigue and creep-fatigue tests (e.g. bellows, V-shape spacers, etc). - Potential for ceramic fiber release from insulation during normal operation and transients.	The reference design for the primary and secondary hot gas duct is the V-shaped metallic concept. The ceramic concept is envisioned as a fall back option for the primary hot gas duct. In the first stages of the design, tests should cover both the metallic and ceramic design (pending the confirmation of the feasibility of the metallic design).
	3.1.6.0	Steam Generator	Test during commissioning stage of: thermal-hydraulic performance, flow induced-vibration, and flow stability and controllability of water and steam system. Test integrity of dissimilar material welding joint in tubes (alloy 800H/ 2.25 Cr - 1 Mo).	
3.2	**PCS**			
3.2.1	**Brayton Cycle**			
	3.2.1.1	Not used.		
	3.2.1.2	Not used.		
	3.2.1.3	Not used.		

Table 4-9 continued (Updated DDN List Based on PIRT Reconciliation)

Section	AREVA DDN Number	DDN Title	Description	Notes
	3.2.1.4	Not used.		
3.2.2	**HRSG**			
	3.2.2.1	Not used.		
3.2.3	**Steam Cycle**			
	3.2.3.1	Not used.		
3.2.4	**Process Steam Supply System**			
	3.2.4.1	Reboiler	TBD - place holder in case future testing is required	
3.3	**Other Systems and Subsystems**			
	3.3.1.0	Helium Purification System	Selection and qualification of appropriate charcoal (during commissioning phase). Size various components for the desired flow rates.	
	3.3.2.0	Not used.		
	3.3.3.0	Fuel Handling System	The Fuel Server system needs to be designed based on the current system concept. Key activities should include: - Mechanical design of the shield enclosure. - Design of the robotic fuel cart. - Development of the control software.	The Fuel Server System has been described only as a design concept at this point. Testing of the Fuel Server, beyond initial component testing, should be included in the testing program developed for the complete Fuel Handling System.

Table 4-9 continued (Updated DDN List Based on PIRT Reconciliation)

Section	AREVA DDN Number	DDN Title	Description	Notes
	3.3.4.0	RCCS	Characterization of the heat transfer characteristics of the anticipated or proposed surface treatments for the reactor vessel and the panel heat exchanger will need to be accomplished. A large scale (e.g., representative height) demonstration of the capability of the RCCS to release the decay heat for the reactor may be beneficial.	Use of an uninsulated reactor vessel coupled with water-cooled panels as a core cooling mechanism for accident conditions has not been fully demonstrated. Basic physics of conduction cooldown heat transfer to RCCS and RCCS operation are straightforward. Separate effects tests provide direct path to critical data (e.g., surface emissivities). AREVA does not have a strong position on need for large scale test. While separate effects testing provides most precise information on critical parameters, large scale integrated testing may provide convincing confirmation for regulators. Licensing may be easier if large scale test is performed.
	3.3.5.0	Instrumentation	Examples of R&D which might be envisioned: - Neutron flux detectors – Some R&D and qualification efforts may be desirable to select detector technology and verify adequate sensitivity and lifetime. - Temperature Measurements – Standard thermocouples used in nuclear plants today are capable of measuring operating temperatures up to 1200ºC. Monitoring accident conditions may require the use of Pt-Rh thermocouples for operation at higher temperatures. These types of thermocouples are not used today and limited data about their reliability in nuclear environments exists. R&D may be needed to qualify Pt-Rh thermocouples for use in the NGNP, particularly if measurement of temperatures within the core is desired. Qualification testing is required in helium at expected normal and off-normal pressures, temperatures, flows and moisture levels. Further needs should arise together with the definition of the monitoring strategy.	NGNP will be a test bed for testing and validating HTR technology. Therefore, NGNP will include additional instrumentation beyond that required for normal operation in a commercial plant. Specific FOAK instrumentation will be required, and special instrumentation to support future HTR technology development missions may also be anticipated. For example, specific instrumentation might be required for operation at high temperature. The detail of this instrumentation (in particular the operating conditions) will be a function of the type of testing and experiments envisioned and will depend also on the monitoring strategy.

Table 4-9 continued (Updated DDN List Based on PIRT Reconciliation)

Section	AREVA DDN Number	DDN Title	Description	Notes
4	**Computer Codes, Methods Development and Qualification**			
4.1	**Code Development**			
4.1.1	**Neutronics**			
	4.1.1.1	CABERNET (=NEPHTYS/STAR-CD)	Enhancement of capabilities for the calculation of transient analyses.	This is a coupled neutronics/TH code.
	4.1.1.2	NEPHTYS		
4.1.2	**Thermal-Hydraulic**			
	4.1.2.1	RELAP5-3D	Several areas with regard to both modeling and validation are identified in the report INEEL/EXT-04-02293. Validation beyond that identified in INEEL/EXT-04-02293 and consistent with that planned for MANTA should be pursued. The INL has recognized a need to couple Computation Fluid Dynamics models to RELAP5-3D. Currently, RELAP5-3D is capable of coupling to the FLUENT CFD code. If the role of RELAP5-3D expands, there may be value to the project coupling the CFD code STAR-CD with RELAP5-3D to best utilize our investment in our STAR-CD models for the VHTR.	Reactor system analysis code. Unique capability to model: a) water ingress and b) air ingress. Unique capability to interface with other computation tools.
	4.1.2.2	STAR-CD	Develop graphite oxidation model for water and air ingress transients on reactor internal structures.	Mass transfer, reaction kinetics, air ingress, water ingress
4.1.3	**Fuel**			
	4.1.3.1	ATLAS	Improve the diffusion and the coatings corrosion modeling. Coated particle irradiation at relevant operating conditions (burnup, temperature, fluence). Heat-up experiment of irradiated fuel particles. Develop UCO models.	

Table 4-9 continued (Updated DDN List Based on PIRT Reconciliation)

Section	AREVA DDN Number	DDN Title	Description	Notes
4.1.4	**Other Codes**			
	4.1.4.1	FP Transport	Models for: - The assessment of product activation in the primary circuit (in particular tritium and 14C). - Investigation of tritium migration and control in SG and secondary water loops. - Radio-contaminants distribution in the primary circuit, making distinction between circulating activity, plated out / deposited activity and purification system, during both normal operation and accidental situations. - Radio-contaminants releases outside the primary pressure boundary. - Radio-contaminants releases in the environment for accidental situations. - Fuel hydrolysis. - Fission product wash-off. Experimental work required for model qualification and for the actual qualification effort. Data collection needed to support modeling of aerosol growth; aerosol and dust dispersion, bounce and breakup; confinement aerosol physics; surface roughness effects; coolant chemical interaction with surfaces; and FP diffusivity, sorbtivity and resuspension. Recommended to develop a mechanical analysis code for the NHS.	

Table 4-9 continued (Updated DDN List Based on PIRT Reconciliation)

Section	AREVA DDN Number	DDN Title	Description	Notes
	4.1.4.2	Structure Analysis	Introduction in structural mechanics codes of specific constitutive laws for HTR material (graphite, visco-plastic behavior of Ni base alloys): completing the experimental databases and developing numerical models. Seismic behavior of a block type core: development of a block type core modeling and experimental determination of input data for the model through tests on a vibration table. Fluid structure interaction and flow induced vibrations. LBB methodology for gas cooled reactors.	The proposed safety approach excludes the vessel rupture and thus relies on a leak-before-break (LBB) approach that has not been established for gas cooled reactors yet.
	4.1.4.3	Chemistry Effects Of Steam/Water	Need data to determine necessity and preferential approach to any modeling effort. Effects of water ingress from small and large SG breaks on graphite oxidation, pressure increase, fission product mobilization, fuel hydrolysis.	

Table 4-9 continued (Updated DDN List Based on PIRT Reconciliation)

Section	AREVA DDN Number	DDN Title	Description	Notes
4.2	**Code Qualification**			
4.2.1	**Neutronics**			
	4.2.1.1	CABERNET (=NEPHTYS/STAR-CD)	Experimental data of coupled power and temperature distributions obtained on representative fuel assembly geometry. If not achievable before NGNP: - Partial qualification data (e.g. burn-up measurements on fuel columns after irradiation in HTTR, which can provide a code/experiment comparison on the axial power distribution on a cycle, certainly different with and without temperature feedback). - Additional power margins will be necessary for initial operation of NGNP, to account for the uncertainty on the coupled neutronics-thermo-fluid dynamics calculation. - Need to provide in-core measurements of power and temperature distributions in NGNP for qualification of coupled calculations and therefore for allowing reaching nominal power. - R&D needs for developing appropriate sensors for in-core measurements (never performed in HTRs).	Coupled neutronics/TH code This code qualification can be performed during commissioning phase.
	4.2.1.2	MCNP	Dedicated critical experiments, with an asymptotic spectrum representative of the expected prismatic fuel assembly and core, with full access to pin-by-pin power distributions, and control rod and burnable poisons worths are needed. Experimental data of neutronic characteristics (spectrum, fission and capture rates) at the interface between a prismatic fuel assembly and a graphite reflector assembly.	Data from FSV and HTTR first criticality testing can be applicable to MCNP code qualification.
	4.2.1.3	MONTEBURNS	Experimental results of fuel irradiation experiments (compacts or pebbles) at representative burnup, temperature and fluence. Experimental results of decay heat at short term (<100 hours) for representative fuel composition and burnup.	

Table 4-9 continued (Updated DDN List Based on PIRT Reconciliation)

Section	AREVA DDN Number	DDN Title	Description	Notes
	4.2.1.4	NEPHTYS	Benchmarking for annular HTR core geometries. Approach for qualification currently consists of comparisons against Monte-Carlo reference calculations and benchmarking against the few available experimental data (FSV, HTTR). Thus new dedicated critical experiments, with an asymptotic spectrum representative of the expected prismatic fuel assembly and core, with full access to pin-by-pin power distributions, and control rod and burnable poisons worths are needed. Experimental data of neutronic characteristics (spectrum, fission and capture rates) at the interface between a prismatic fuel assembly and a graphite reflector assembly.	
4.2.2	**Thermal-Hydraulic**			
	4.2.2.1	MANTA	Additional benchmarks against experimental data are required. Some facilities which could provide valuable data have been identified (non exhaustive): namely, HTTR reactor in Japan, HTR10 reactor in China, SBL-30 loop in the USA (SNL). The qualification of component models will follow from the qualification tests of the components. The core model qualification follows from comparison with other codes and experimental results (detailed core calculation).	Global validation of MANTA currently consists of code-to-code benchmarking: comparisons with CATHARE from CEA (France), LEDA from EDF (France), ASURA from MHI (Japan), REALY2 from GA (USA) and RELAP5-3D from INL (USA) have already shown good agreement. Qualification against experimental data is also progressing (EVO loop, HE-FUS3 loop and PBMM).
	4.2.2.2	STAR-CD	Qualification of conduction cooldown models on representative geometry, materials and temperature. Qualification of countercurrent flow and diffusion models. Qualification of turbulence and stratification/mixing on representative mock-ups in critical areas (lower and upper reactor plena, hot gas duct, core bypass). Qualification of oxidation models with selected graphite grades in representative operating conditions.	Several predecessor tests performed with different graphite grades can be applied for STAR-CD qualification.

Table 4-9 continued (Updated DDN List Based on PIRT Reconciliation)

Section	AREVA DDN Number	DDN Title	Description	Notes
4.2.3	**Fuel**			
	4.2.3.1	ATLAS	Coated particle irradiation at relevant operating conditions (burnup, temperature, fluence); heat-up experiment of irradiated fuel particles.	

5.0 CONCLUSIONS

Within the course of the activity documented by this report, AREVA has reviewed and updated its list of NGNP DDNs and reconciled that list against the PIRTs developed by the NRC for the NGNP project. As a result of this update and reconciliation, several DDNs were removed from AREVA's list. These DDNs were related to:

- The need for a reactor vessel comprised of 9Cr1Mo steel. The lower reactor outlet temperature of 750°C, employed in the revised AREVA reference design, allows the use of LWR steel for the reactor vessel, greatly simplifying reactor vessel qualification.

- The need for an IHX between high temperature gas systems. The use of a conventional steam power conversion system places a steam generator in the primary system in place of an IHX. The more proven and robust technology for the steam generator removes the need for many IHX development DDNs.

- The required use of composite materials in the reactor internals system. Though the reactor internals system components will still need to meet functional requirements for all accident conditions, many components requiring composites for a high temperature concept (i.e., 900°C) can be fabricated using metallic materials for a lower temperature concept. However, some components (e.g., control rod sheath, hot duct liner) may still benefit from composites at 750°C. Specific need for these materials will be resolved as design work progresses.

As some DDNs were removed from AREVA's list, some were also added or modified as a result of this activity. These DDNs were related to:

- Field fabrication of the reactor vessel. The size of the NGNP reactor vessel will require, at many sites, completion of the assembly process in the field. DDNs covering both process and inspection areas were added.

- Interactions between graphite and fission products. Data needed to adequately develop and qualify fission product transport models was detailed. Additional fission product behavior information was also detailed in the list.

- Fuel oxidation behavior. The performance of the various fuel components, including the kernel, particle layers, and compact under oxidizing conditions during an air or water ingress event were identified as a data need not currently covered. Other non-fuel data needs related to steam ingress were also identified and added.

- Clarification of data needs. Several existing DDNs were updated to provide more clarity in the description of the data required. One particular area of note was irradiation testing. In many cases, parameters requiring investigation during irradiation tests were more clearly denoted in the DDN list.

The final revised list of DDNs provided in this report will provide a good starting point for follow-on conceptual design activities performed by AREVA and others. As these activities are completed, it is expected that changes to this DDN list will be needed to maintain pace with our understanding of the NGNP design and the state of its technology.

6.0 REFERENCES

1. 12-9051191-001, *NGNP with Hydrogen Production Preconceptual Design Studies Report*, AREVA NP Inc., June 2007.

2. NUREG/CR-6844, *TRISO-Coated Particle Fuel Phenomenon Identification and Ranking Tables (PIRTs) for Fission Product Transport Due to Manufacturing, Operations, and Accidents*, U.S. NRC, 2004.

3. NUREG/CR-6944, *Next Generation Nuclear Plant Phenomena Identification and Ranking Tables (PIRTs)*, U.S. NRC, 2008.

APPENDIX A: ORIGINAL PIRT SUMMARY LIST

A.1 Original PIRT List

This appendix presents the raw PIRT tables as found in NUREG/CR-6944, Volumes 2-6.

Tables A-1 to A-7 represent the summary tables from Volume 2 of NUREG/CR-6944. They contain the ID No., Issue, Comments, Importance and Knowledge levels as found in the PIRTs. Additionally, the AREVA PIRT ID No. as assigned during the PIRT/DDN reconciliation task was incorporated.

Information crossed out denotes PIRT items that were eliminated by the PIRT panel.

Table A-8 represents the Water-Steam Ingress PIRT. Because no summary table was created for water-steam ingress in NUREG/CR-6944, the individual panelists' ranking tables were used to identify the PIRT items considered. This is acceptable because the ID No., Issue and Comments are the same for all individual panelists' ranking tables. The importance and knowledge levels were left out as they vary from panelist to panelist.

Table A-9 contains the ID No., Issue, Rationale, Importance and Level of Knowledge as found in Table 10 of the Fission Product and Dose PIRT (NUREG/CR-6944, V3). It also includes the AREVA PIRT ID No. In the Importance and Level of Knowledge columns, the number preceding some of the levels (L, M, and H for "low", "medium", and "high") denotes the number of panelists who agreed with that knowledge level.

In the Rationale column, the following abbreviations were used:

IC – initial condition, the result of long-term normal operation

Trans. – transient and accident condition

FP – fission products

Table A-10 represents the summary table from the High Temperature Materials PIRT. It contains the ID No., FOM (Figure of Merit, i.e., evaluation criteria), Pathways to Release/Scenario, Phenomena, Phenomena Importance and Knowledge Level as found in Table 6 of Volume 4. The AREVA PIRT ID No. was also added to the table.

The Pathways to Release/Scenario column contains numbers which correspond to scenario types. The scenario types are listed in Table A-11.

Table A-12 contains the ID No., Phenomena and Comment columns as found in Table 3 of the Graphite PIRT (NUREG/CR-6944, V5). The Knowledge and Importance levels come from Section 3.9 of the Graphite PIRT. The AREVA PIRT ID No. was included in the table as well.

Table A-13 is the summary table from Volume 6. It contains the New ID No. as well as the Event, Evaluation Criterion, Issue, Importance and Knowledge Base as found in Table 4.1 of Volume 6.

Table A-1: Normal Operation (20-100% power) PIRT Chart (Table 2.1 of NUREG/CR-6944, V2)

AREVA PIRT ID No.	ID No.	Issue (Phenomena, Process, etc)	Comments	Importance	Knowledge Level
V2-2.1-1	1	Core coolant bypass flow	Determines active core cooling. Affects Tmax,fuel.	H	L
V2-2.1-2	2	Core flow distribution, flow in active core	Determines fuel operating temperatures. Assumes known bypass flows.	H	M
V2-2.1-3	3	Core flow distribution changes due to temperature gradients	Some effect on fuel operating temperatures. Active core flow. Large delta T from inlet to outlet. Gradients different from LWRs	M	M
V2-2.1-4	4	Core flow distribution changes due to graphite irradiation	Some effect on fuel operating temperatures.	M	L
V2-2.1-5	5	Core flow distribution changes due to core barrel geometry changes	Some effect on fuel operating temperatures. Wouldn't apply to case where inlet flow enters through reflectors.	M	M
V2-2.1-6	6	Core flow distribution due to core block stability (prismatic)	Problem at Fort St. Vrain.	M	M
V2-2.1-7	7	Pebble bed core bridging	Problem at AVR. Happened at bottom of core at beginning of life.	M	M
V2-2.1-8	8	Pebble bed core wall interface effects on bypass flow	Diversion of some core cooling flow. Number of pebbles across impacts interface effects.	H	L
V2-2.1-9	9	Coolant properties - viscosity and friction effects	Determines core temperatures.	H	H
V2-2.1-10	10	Coolant heat transfer correlations	Determines core temperatures.	H	H for PMR M for PBR
V2-2.1-11	11	Core inlet flow distribution	Important for core cooling calculations.	M	M

Table A-1 continued (Normal Operation)

AREVA PIRT ID No.	ID No.	Issue (Phenomena, Process, etc)	Comments	Importance	Knowledge Level
V2-2.1-12	12	Thermal fluid mixing from separate loops	Important for core cooling calculations. Very design-dependent.	M	M
V2-2.1-13	13	Outlet plenum flow distribution	Affects mixing. Thermal stresses in plenum and down stream, outlet pressure distribution.	H	L
V2-2.1-14	14	Pebble flow	Affects core maximum temperatures, pebble burnup. Problem at THTR (pebbles with higher peaking factors flowed faster in the middle).	H	M
V2-2.1-15	15	Effective core thermal conductivity	Affects core maximum temperatures during operation.	L	M
V2-2.1-16	16	Effective fuel element thermal conductivity	Affects core maximum temperatures during operation.	H	M
V2-2.1-17	17	Core specific heat	Affects transients.	M	H
V2-2.1-18	18	Side reflector - core barrel - vessel heat transfer	Affects residual heat losses, vessel temperatures (radiation, convection, conduction).	M	M
V2-2.1-19	19	RCCS heat removal	Affects residual heat losses, vessel temperatures.	H	M
V2-2.1-20	20	Shutdown cooling system startup transients during core heatup	Can affect component thermal stresses; dependent on design and operational details.	H	M
V2-2.1-21	2[1]	Reactivity-Temperature feedback coefficients	Affects core transient behavior.	H	L
V2-2.1-23	23	Xenon buildup and oscillation	Affects core transient behavior.	M	M
V2-2.1-24	24	Fuel performance modeling	Fuel type dependent. Crucial to design and siting. Depends on performance envelope, QA/QC, ...	H	L

Table A-1 continued (Normal Operation)

AREVA PIRT ID No.	ID No.	Issue (Phenomena, Process, etc)	Comments	Importance	Knowledge Level
V2-2.1-25	25	Ag-110m release and plateout	Affects maintenance dose. May be dependent upon fuel design, columnar grains vs. pearl grains. Will be dependent upon fuel temperature.	H	L
V2-2.1-26	26	Power and flux profiles (initial conditions for accidents)	Affects fuel potential for failures in accident conditions due to long-term exposures. For affecting conditions, see item #19.	H	M

Table A-2: General LOFC PIRT Chart (Table 2.2 of NUREG/CR-6944, V2)

AREVA PIRT ID No.	ID No.	Issue (Phenomena, Process, etc)	Comments	Importance	Knowledge Level
V2-2.2-1	1	Core thermal conductivity (effective)	Affects Tfuel,max (low values) and Tvessel,max (high values). Effective conductivity is a complex function of graphite temp and radiation terms.	H	M
V2-2.2-2	2	Fuel element annealing (prismatic core)	End-of-life Tfuel maximum calculations sensitive to annealing calculations. Extent of annealing in given areas can be difficult to predict.	M	M
V2-2.2-3	3	Core specific heat function	Large core heat capacity gives slow accident response. Fuel property close to that of graphite.	H	H
V2-2.2-4	4	Vessel emissivity	T4 vessel to RCCS affects heat transfer process at accident temperatures.	H	M
V2-2.2-5	5	RCCS panel emissivity	Factor in the radiant heat transfer from vessel to RCCS	same as #4	[no entry]
V2-2.2-6	6	Vessel to RCCS effective view factors	Determines space-dependent heat transfer; complex geometries involved.	H	M
V2-2.2-7	7	Reactor vessel cavity air circulation and heat transfer	Affects upper cavity heating, assume controls inserted either through automatic or manual action relatively quickly.	H	L
V2-2.2-8	8	Reactor vessel cavity "gray gas" (participating media)	Can affect vessel temperatures and Tfuel,max.	M	M
V2-2.2-9	9	Reflectors: conductivity and annealing	Affects peak fuel and vessel temperatures.	H	M
V2-2.2-10	10	Core barrel emissivity	Affects peak fuel and vessel temperatures.	H	M
V2-2.2-11	11	Stored (Wigner) energy releases	Effects apply to low-temperature operation graphite reactors	L	H
V2-2.2-12	12	RCCS fouling on coolant side	Affects heat sink effectiveness. Deterioration can be measured on-line in some designs.	H	M

Table A-2 continued (General LOFC)

AREVA PIRT ID No.	ID No.	Issue (Phenomena, Process, etc)	Comments	Importance	Knowledge Level
V2-2.2-13	13	RCCS spatial heat loadings	Shifts in heat loadings can affect cooling effectiveness. Complex geometries involved.	H	M
V2-2.2-14	14	RCCS performance including failure of 1 of 2 channels	Affects cooling effectiveness (design). Complex geometries involved, differential expansion leads to support structure concerns.	H	M
V2-2.2-15	15	RCCS failure of both channels; heat transfer from RCCS to concrete cavity wall - Concrete thermal response - Concrete degradation	Involves complex heat transfer to cavity walls.	H	M
V2-2.2-16	16	RCCS panel damage from missiles	Complex phenomena involved.	Skip	Skip
V2-2.2-17	17	RCCS forced-to-natural circulation transitions (part of ID #14)	Complex phenomena (more so with water coolant). Crucial to function.	H	M
V2-2.2-18	18	RCCS single phase boiling transitions (part of ID #14)	Complex phenomena. Crucial to function.	H	M
V2-2.2-19	19	RCCS parallel channel interactions (part of ID #14)	Complex phenomena. Crucial to function.	H	M
V2-2.2-20	20	RCCS natural circulation in horizontal panel(s) (part of ID #14)	Complex phenomena (more so with water coolant). Crucial to function.	H	M
V2-2.2-21	21	Decay heat (temporal and spatial)	Time dependence and spatial distribution major factors in Tfuel,max estimate.	H	M

Table A-3: Pressurized LOFC PIRT Chart (Table 2.3 of NUREG/CR-6944, V2)

AREVA PIRT ID No.	ID No.	Issue (Phenomena, Process, etc)	Comments	Importance	Knowledge Level
V2-2.3-1	1	Inlet plenum stratification and plumes	Determines design of upper vessel head area insulation.	H	M
V2-2.3-2	2	Radiant heat transfer from top of core to upper vessel head	Determines design of upper vessel head area insulation, view factor models Also affected by core top surface temperatures.	H	M
V2-2.3-3	3	RCCS spatial heat loadings	Major shifts in heat load to top of RCCS. Complex geometries involved.	H	M
V2-2.3-4	4	Core coolant flow distribution	Dominates core heat redistribution in P-LOFC. Involves low-flow correlations, flow reversals.	H	M
V2-2.3-5	5	Core coolant (channel) by-pass flow	Involves low-flow correlations, flow reversals.	H	M
V2-2.3-6	6	Coolant flow friction/viscosity effects	Significant effects on plumes. Models for very low and reverse flows.	H	M
V2-2.3-7	7	Impacts (thermal shock) in SCS due to startup flow transient	Thermal transients for P-LOFCs more pronounced.	M	M

Table A-4: Depressurized LOFC PIRT Chart (Table 2.4 of NUREG/CR-6944, V2)

AREVA PIRT ID No.	ID No.	Issue (Phenomena, Process, etc)	Comments	Importance	Knowledge Level
V2-2.4-1	1	Core effective thermal conductivity	Affects Tfuel,max for D-LOFC.	H	M
V2-2.4-2	2	Decay heat and distribution vs. time	Affects Tfuel,max for D-LOFC.	H	M
V2-2.4-3	3	RCCS spatial heat loadings	Major shifts in heat load to middle of RCCS. Complex geometries involved. Reference: #13 from general LOFC table.	M	M
V2-2.4-4	4	Heatup accident fuel performance modeling	Crucial factor in reactor design limits. Dependent on fuel type, operational history.	H	M
V2-2.4-5	5	Hydrodynamic conditions for dust suspension (fluid structure interactions)	From discussion with fission product panel.	H	M
V2-2.4-6	6	Dust effect on coolant properties and flow in vessel	Affects circulation.	L	M
V2-2.4-7	7	Cavity over-pressurization	Possible damage to cavity components.	H	H
V2-2.4-8	8	Pressure pulse in confinement	Possible damage to cavity components.	H	M

Table A-5: Air Ingress LOFC PIRT Chart (Table 2.5 of NUREG/CR-6944, V2)

AREVA PIRT ID No.	ID No.	Issue (Phenomena, Process, etc)	Comments	Importance	Knowledge Level
V2-2.5-1	1	Coolant flow and thermal properties for mixed gases in vessel	Determines friction and heat transfer characteristics in core. Viscosity and thermal conductivity.	H	H
V2-2.5-2	2	Heat transfer correlations for mixed gases in core	Determines heat transfer characteristics in core.	M	M
V2-2.5-3	3	RCCS performance with "gray gas" in cavity	Particulates, etc in cavity reduces radiant heat transfer. Complex processes involved. As seen in G-LOFC #8	M	L
V2-2.5-4	4	Fuel performance with oxygen attack	Consideration for long-term air ingress involving core (fueled area) oxidation. FP releases observed for high temperature exposures.	H	M
V2-2.5-5	5	Core support structures oxidation	Low-temperature oxidation potentially damaging to structural strength.	H	M
V2-2.5-6	6	Core oxidation	Determination of "where" in core the oxidation would take place.Graphite oxidation kinetics affected by temp, oxygen content of air, irradiation of graphite.	H	M
V2-2.5-7	7	Rx cavity-to-reactor vessel air ingress [see #14 and 15]	Air from cavity to vessel after D-LOFC.	H	M
V2-2.5-8	8	Phenomena that affect cavity gas composition and temperature with inflow	Provides gas ingress and cold-leg conditions. Needed to calculate ingress flow rate and properties. Entrainment through relief valve, etc. Dependent variable.	H	M
V2-2.5-9	9	Cavity gas stratification and mixing	Provides gas ingress and cold-leg conditions. Needed to determine oxidation rate.	M	M
V2-2.5-10	10	Confinement-to-reactor cavity air ingress	Determines long-term oxidation rate if accident unchecked.	H	M

Table A-5 continued (Air Ingress LOFC)

AREVA PIRT ID No.	ID No.	Issue (Phenomena, Process, etc)	Comments	Importance	Knowledge Level
V2-2.5-11	11	Cavity combustion gases	Some CO formed as oxidation product.	L	M
V2-2.5-12	12	Cavity structural integrity during blowdown	Influence on air ingress analysis modeling.	M	M
V2-2.5-13	13	Cavity filtering performance	Affects radioactive dust releases. Dust can contribute to the source term for PBR.	H	M
V2-2.5-14	14	Duct exchange flow	Stratified flow phenomena leading to helium flow exit and air ingress into lower plenum.	H	M
V2-2.5-15	15	Molecular diffusion	Air remaining in the reactor cavity enters into RV by molecular diffusion, prior to onset of natural circulation.	H	M
V2-2.5-16	16	Chimney effects	In case of double break exposing both the upper and lower plenum to confinement air.	M	M
V2-2.5-17	17	Thermal stratification/mixing in the lower plenum	[See #14]	*[no entry]*	*[no entry]*
V2-2.5-18	*[no entry]*	Environment-to-confinement air leakage	[See #10]	*[no entry]*	*[no entry]*
V2-2.5-19	*[no entry]*	Core flow distribution following onset of natural circulation	[See #1]	*[no entry]*	*[no entry]*

Table A-6: Reactivity (ATWS) PIRT Chart (Table 2.6 of NUREG/CR-6944, V2)

AREVA PIRT ID No.	ID No.	Issue (Phenomena, Process, etc)	Comments	Importance	Knowledge Level
V2-2.6-1	1-D	Reactivity insertion due to pebble core compaction (packing fraction) via earthquake	Potentially sharp increase in reactivity with packing fraction.	M	M
V2-2.6-2	~~2~~	~~[Prismatic] Excess reactivity due to burnable poison loading error (BP)~~	~~Potential for large reactivity inputs with large excess reactivity.~~ ~~Uncertainty depending on BP design.~~	*[no entry]*	*[no entry]*
V2-2.6-3	3	Reactivity insertion due to steam-water ingress accidents	Positive reactivity insertions possible.Complex processes involved.Also decreases control rod effectiveness.	H	M
V2-2.6-4a	4a	Phenomena for water or steam ingress from SCS, or PCU coolers	Some water ingress scenarios are postulated. Effects on reactivity	L	M
V2-2.6-4b	4b	Mechanisms for water or steam ingress from steam generator	Some water ingress scenarios are postulated. Effects on reactivity	*[no entry]*	*[no entry]*
V2-2.6-5	5	Reactivity temperature feedback coefficients (fuel moderator, reflectors)	Affects passive safety shutdown characteristics	H	M
V2-2.6-6	6	Control and scram rods, and reserve shutdown worths	Needed for cold or hot shutdown validation.	H	M
V2-2.6-7	7	Xenon and samarium buildup	Determination of poison distribution. Xenon decay determines recriticality time.	M	M
V2-2.6-8	~~8~~	~~Scram and reserve shutdown system fails~~	~~Needed for cold shutdown validation.~~	*[no entry]*	*[no entry]*
V2-2.6-9	~~9~~	~~Rod ejection~~	~~Design features.~~	*[no entry]*	*[no entry]*
V2-2.6-10	10	Coolant flow restarts during loss of forced circulation ATWS	Can lead to selective undercooling of hot regions. Coupled thermal-fluids and neutronics.	M	L
V2-2.6-11	11-D	Decay heat during loss of forced circulation ATWS (vs. time and	See entry in G-LOFC chart (item #21)	*[no entry]*	*[no entry]*

Table A-6 continued (Reactivity (ATWS))

AREVA PIRT ID No.	ID No.	Issue (Phenomena, Process, etc)	Comments	Importance	Knowledge Level
		distribution)			
V2-2.6-12	12-D	Reactivity insertion from overcooling transients with ATWS	Positive reactivity from decreases in core inlet temperature.	L	H
V2-2.6-13	13-D	Reactivity insertion from core support failure due to air ingress corrosion	Core drop pulling away from control rods would insert reactivity.	L	M

"-D" suffix – added or amended per D.E. Carlson (NRC) suggestion

Table A-7: IHX Failure (Molten Salt) PIRT Chart (Table 2.7 of NUREG/CR-6944, V2)

AREVA PIRT ID No.	ID No.	Issue (Phenomena, Process, etc)	Comments	Importance	Knowledge Level
V2-2.7-1	1	Ingress of He into IHX loop (part of confinement bypass)	Blowdown of primary system into secondary system, gas jet into liquid, initial circulating activity is the prime source of the public and worker dose.	M	H
V2-2.7-2	2	Fission product transport through IHX loop (part of confinement bypass)	Deposit/removal of FP, dust, scrubbing of molten salt, adsorption, plate-out.	H	M
V2-2.7-3	3	He transport in IHX loop (part of confinement bypass)	Possible He/molten salt countercurrent flow, blocking bubble in IHX loop.	M	M
V2-2.7-4	4	Ingress of molten salt (MS) into primary system and RPV	After partial blowdown, relies on items #1, 2, 3 as initial/boundary conditions.	H	M
V2-2.7-5	5	Riser fill with molten salt	Through cold duct.	H	M
V2-2.7-6	6	Lower plenum fill with molten salt	Through hot duct.	H	M
V2-2.7-7	7	Molten salt (in cold duct)-to-core support/vessel heat transfer	*[no entry]*	H	M
V2-2.7-8	8	Molten salt (in hot duct)-to-core support/vessel heat transfer	*[no entry]*	M	M
V2-2.7-9	9	RCCS heat removal	Heat transfer from vessel wall to RCCS and cavity.	H	M

Table A-8: Water-Steam Ingress PIRT Chart (Table 4.8 of NUREG/CR-6944, V2)

AREVA PIRT ID No.	ID No.	Issue (Phenomena, Process, etc)	Comments
V2-X.8-1	1	Coolant flow properties for mixed gases in core	Determines friction and heat transfer characteristics in core. Can affect accident outcome.
V2-X.8-2	2	Heat transfer correlations for mixed gases in core	Determines heat transfer characteristics in core. Can affect accident outcome.
V2-X.8-3	3	RCCS performance with "gray gas" in cavity	Particulates, etc in cavity reduces radiant heat transfer. Complex processes involved.
V2-X.8-4	4	Mechanisms for water or steam ingress from SCS or PCU coolers	Some water ingress scenarios are postulated. Effects on reactivity and core degradation.
V2-X.8-5	5	Fuel performance with oxygen attack	Consideration for water ingress involving core (fueled area) oxidation. FP releases observed for high temperature exposures.
V2-X.8-6	6	Core support structures oxidation modeling	Core support structure area potential weakening.
V2-X.8-7	7	Core (steam) oxidation modeling	Determination of "where" in core the oxidation would take place.
V2-X.8-8	8	Cavity gas composition and temperature	Provides steam/gas ingress and cold-leg conditions. Needed to calculate ingress flow rate and properties.
V2-X.8-9	9	Cavity gas stratification and mixing	Provides steam/gas ingress and cold-leg conditions. Needed to determine oxidation rate.
V2-X.8-10	10	Cavity combustion gases	*[no entry]*
V2-X.8-12	12	Cavity structural performance	Influence on ingress analysis modeling.
V2-X.8-13	13	Cavity filtering performance	Affects radioactive dust releases.
V2-X.8-14	14	Pressure transients from steam formation	Potential damage to primary system structures.

Table A-9: Fission Product Transport and Dose PIRT Chart (Table 10 of NUREG/CR-6944, V3)

AREVA PIRT ID No.	ID No.	Issue (Phenomena, Process, Geometry Condition)	PIRT Rationale for Importance	Importance for NGNP	Level of Knowledge
Critical Initial and/or Boundary Condition					
V3-10-1	1	Decay heat and transient power level	Energy source driving problem (IC and Trans.)	H	H
V3-10-2	2	Material/structure properties	Density, viscosity, conductivity, etc., important parameters in calculations (IC and Trans.)	H	M (graphite) H (steel, concrete)
V3-10-3	3	Graphite impurity levels	Impurity reaction with FP, nuclear graphite expected to have low impurity levels	4M 1H	H
V3-10-4	4	Graphite geometry	Core structure (design information)	H	1M 4H
V3-10-5	5	Thermal-fluid properties	Temperature, pressure, velocity computations (IC and Trans.)	H	4M 1H
V3-10-6	6	Gas composition	Oxygen potential and chemical activity	H	4M 1L
V3-10-7	7	Gas flow path prior, during and post accident	Information needed to model accident (IC and Trans.)	H	5Same as TF group
V3-10-8	8	Temperature (structure and gas) and pressure distribution	Information needed to model accident (IC and Trans.)	H	H
V3-10-9	9	FP plate-out and dust distribution under normal operation	Starting conditions	H	1L 4M
Graphite and Core Materials					
V3-10-10	10	Matrix permeability, tortuosity	Needed for first principle transport modeling (IC and Trans.)	1M 4H	4L 1M
V3-10-11	11	FP transport through matrix	Effective release rate coefficient (empirical constant) as an alternative to first principles (IC and Trans.)	H	L

Table A-9 continued (Fission Product Transport and Dose)

AREVA PIRT ID No.	ID No.	Issue (Phenomena, Process, Geometry Condition)	PIRT Rationale for Importance	Importance for NGNP	Level of Knowledge
V3-10-12	12	Fuel block permeability, tortuosity	Needed for first principle transport modeling (IC and Trans.)	1M 4H	M
V3-10-13	13	FP transport through fuel block	Effective release rate coefficient (empirical constant) as an alternative to first principles (IC and Trans.)	H	1L 4M
V3-10-14	14	Thermal (Soret) diffusion	Thermal gradients are not large outside of fuel	L	L
V3-10-15	15	Basal plane diffusion	Porosity is preferred transport pathway through graphite	L	M
V3-10-16	16	Reflector (in contact w/flow) permeability, tortuosity	Needed for first principle transport modeling (IC and Trans.)	L	M
V3-10-17	17	FP transport through reflector (in contact w/flow)	Effective release rate coefficient (empirical constant) as an alternative to first principles (IC and Trans.)	L	1L 4M
V3-10-18	18	Sorbtivity graphite	Can determine holdup and release of FP (IC and Trans.)	H	M
V3-10-19	19	Fluence effect on transport in graphite	Influences transport, chemical reactivity	H	M
V3-10-20	20	C-14, Cl-36, Co-60 generation and inventory	Radioisotope generated from impurities, might become operational issue (IC)	4L 1M	M
V3-10-21	21	Air attack on graphite	Graphite erosion/oxidation, Fe/Cs catalysis liberating FPs (Trans.)	H	1L 4M
V3-10-22	22	Steam attack on graphite	If credible source of water present; design dependent (Trans.)	H	1L 4M
Fission Product Transport in Reactor Coolant System and Confinement					
V3-10-23	23	FP speciation in carbonaceous material	Chemical form in graphite affects transport (IC and Trans.)	H	L
V3-10-24	24	FP speciation during mass transfer	Chemical change can alter volatility	H	1L 4M
V3-10-25	25	“Knock-along”	Alpha recoil transport of deposited particles on surfaces slow compared to fluid flow transport	L	M
V3-10-26	26	Dust generation	Vector for FP transport; possibility of high mobility	H	M
V3-10-27	27	(De)Absorption on dust	Provides copious surface area for FP absorption	H	2L 3M

Table A-9 continued (Fission Product Transport and Dose)

AREVA PIRT ID No.	ID No.	Issue (Phenomena, Process, Geometry Condition)	PIRT Rationale for Importance	Importance for NGNP	Level of Knowledge
V3-10-28	28	H-3 generation and circulating coolant inventory	Radioisotope, an issue with operational release. H-3 production from He- 3 in coolant, ternary fission, and Li-6 in graphite	4M 1H	M
V3-10-29	29	Ag-110*m* generation, transport	Radioisotope, significant O&M dose on cool, metallic components	H (O&M) L (release)	L
V3-10-30	30	Other activation products (e.g., Cs-134, Mn-55, Fe-56)	Radioisotopes, potential O&M dose	L	M
V3-10-31	31	Nucleation	Unclear due to extremely low FP vapor concentration anticipated	M	M
V3-10-32	32	Aerosol growth	Low concentration growth can lead to high shape factors and unusual size distribution	1M 4H	L
V3-10-33	33	Surface roughness	Affects aerosol deposition 1–5 micron particles (IC and Trans.)	M	M
V3-10-34	34	Coolant chemical interaction with surfaces	Changes oxygen and carbon potential which can affect nature and quantity of sorbed species (IC and Trans.)	H	M
V3-10-35	35	FP diffusivity, sorbtivity in non-graphite surfaces	Determines FP location during operation; acts as a trap during transient (IC and Trans.)	H	L
V3-10-36	36	Aerosol/dust deposition	Gravitational, inertial, thermophoresis, electrostatic, diffusional, turbophoresis (Trans.)	H	M
V3-10-37	37	Aerosol/dust bounce, breakup during deposition	Can modify deposition profile and suspended aerosol distribution	4M 1H	4L 1M
V3-10-38	38	Resuspension	Flow/vibration induced, saltation; mechanical forces can release FPs from pipe surface layers/films (Trans.)	H	4L 1M
V3-10-39	39	Confinement aerosol physics	Analogous to LWR aerosol behavior/physics, delta-T, chemistry; important holdup mechanism (Trans.)	H	M
V3-10-40	40	Dust deposition on vessel and RCCS hardware	Not important for FP transport but may affect radiative heat transfer in reactor cavity	L	L
V3-10-41	41	Corrosion products	Spalled surface films; low corrosion environment (IC	L	H

Table A-9 continued (Fission Product Transport and Dose)

AREVA PIRT ID No.	ID No.	Issue (Phenomena, Process, Geometry Condition)	PIRT Rationale for Importance	Importance for NGNP	Level of Knowledge
			and Trans.)		
V3-10-42	42	Erosion products, noncarbon	Low concentration of coarse materials (IC and Trans.)	L	L
V3-10-43	43	Wash-off	If credible source of water present; design dependent (Trans.)	H	M
V3-10-44	44	Failure modes of auxiliary systems (e.g., gas cleanup, holdup, refueling)	Potential release due to failure (Trans.)	M	M
V3-10-45	45	Radiolysis effects in confinement	FP (e.g., I, Ru, Te) chemistry, paint chemistry (dependent on confinement radiation level) (Trans.)	H	M
V3-10-46	46	Filtration	Traditional passive charcoal/HEPA (Trans.)	H	H
V3-10-47	47	Production/combustion of flammable gas	CO, H_2 production issues, IHX secondary-primary leak, potential resuspension and chemical transformation of FPs (Trans.)	M	1M 4H
V3-10-48	48	Combustion of dust in confinement	Source of heat and distribution of FPs with in confinement	H	1L 4M
V3-10-49	49	NGNP-unique leakage path beyond confinement	IHX to secondary site contamination; could be risk dominant (Trans.)	H	1L 4H
V3-10-50	50	Confinement leakage path, release rate through penetrations	Cable/pipe penetrations, cracks, holes, HVAC (Trans.)	H	M
V3-10-51	51	Cable pyrolysis, fire	Soot generation and changes to iodine chemistry	H	M
V3-10-52	52	Pressure-relief-valve filter	Opening of the relief valve generates a transport path that may be filtered; depends on design	L	H
V3-10-53	53	Recriticality (slow)	Additional thermal load to fuel. Increases source but not expected to affect transport path.	H	M
V3-10-54	54	Fuel-damaging RIA	An intense pulse could damage fuel. Increases source but not expected to affect transport path	H	M
V3-10-55	55	Argon activation in reactor cavity	Air in cavity activated by neutron leakage and can escape to environment	H (normal operation)	H
V3-10-56	56	Redistribution of fission products due to control rod movement	Articulated control rod joints can collect and redistribute fission products	L	L

Table A-10: PIRT Table for High-Temperature Materials (Table 6 of NUREG/CR-6944, V4)

AREVA PIRT ID No.	ID No.	FOM (Evaluation Criteria)	Pathways to Release/Scenario	Phenomena	Phenomena Importance	Knowledge Level
Reactor Pressure Vessel						
V4-6-1	1	RPV Integrity	Breach/1-4	Thermal aging (long term)	H	M
V4-6-2	2	RPV Integrity	Breach/1-4	Thermal aging (long term)	L	H
V4-6-3	3	RPV Integrity	Breach/8, 9	Thermal aging (short term, high temperature)	M	M
V4-6-4	4	RPV Integrity	Breach/8, 9	Thermal aging (short term, high temperature)	L	H
V4-6-5	5	RPV Integrity	Breach/1-7	Crack initiation and subcritical crack growth	H	L
V4-6-6	6	RPV Integrity	Breach/1-7	Crack initiation and subcritical crack growth	H	H
V4-6-7	7	RPV Integrity	Breach/1-7	High cycle fatigue (HCF)	L	M
V4-6-8	8	RPV Integrity	Breach/1-7	High cycle fatigue (HCF)	L	H
V4-6-9	9	RPV Integrity	Breach/3	Radiation degradation	M	L
V4-6-10	10	RPV Integrity	Breach/3	Radiation degradation	L	H
V4-6-11	11	FOM1: RPV Integrity FOM2: Peak Fuel Temperature	Inadequate Heat Transfer/1-3	Compromise of emissivity due to loss of desired surface layer properties	H	L
V4-6-12	12	RPV Integrity	Excess Deformation/8, 9	Creep (transient)	M	M
V4-6-13	13	RPV Integrity	Excess Deformation/8, 9	Creep (transient)	M	M

Table A-10 continued (High Temperature Materials)

AREVA PIRT ID No.	ID No.	FOM (Evaluation Criteria)	Pathways to Release/Scenario	Phenomena	Phenomena Importance	Knowledge Level
V4-6-14	14	RPV Integrity	Excess Deformation/1-7	Creep (normal operations)	M	L
V4-6-15	15	RPV Integrity	Excess Deformation/1-7	Creep (normal operations)	L	M
V4-6-16	16	RPV Integrity	Breach, Excess Deformation/1-9	Field fabrication process control	H	L
V4-6-17	17	RPV Integrity	Breach, Excess Deformation/1-9	Property control in heavy sections	H	L
Power Conversion Vessels (PCVs) and Turbomachinery						
V4-6-18	18	FOM1: Primary System Pressure Boundary Integrity FOM2: Integrity of Rotating Equipment	Breach of Vessel/1-7	Thermal aging	L	H
V4-6-19	19	FOM1: Primary System Pressure Boundary Integrity FOM2: Integrity of Rotating Equipment	Breach of Vessel/1-7	Crack initiation and subcritical crack growth in power conversion vessel (PCV)	L	H
V4-6-20	20	FOM1: Primary System Pressure Boundary IntegrityFOM2: Integrity of Rotating Equipment	Breach of Vessel/3,4	High cycle fatigue in PCV	M	H
V4-6-21	21	FOM1: Primary System Pressure Boundary Integrity FOM2: Integrity of Rotating Equipment	Breach of Vessel/1-7	Missile (disc failure)	M	M
V4-6-22	22	FOM1: Primary System Pressure Boundary Integrity FOM2: Integrity of Rotating Equipment	Turbine Failure/1-7	Creep, creep crack growth, thermal loading, rotational stress, fatigue, creep fatigue	M	M

Table A-10 continued (High Temperature Materials)

AREVA PIRT ID No.	ID No.	FOM (Evaluation Criteria)	Pathways to Release/Scenario	Phenomena	Phenomena Importance	Knowledge Level
V4-6-23	23	FOM1: Primary System Pressure Boundary Integrity FOM2: Integrity of Rotating Equipment	Oil Bearing Failure/1-7	Primary coolant contamination (carburization?)	M	M
Circulators						
V4-6-24	24	FOM1: Primary System Pressure Boundary Integrity FOM2: Integrity of Rotating Equipment	Oil Bearing Failure/1-7	Primary coolant contamination (carburization?)	M	M
V4-6-25	25	FOM1: Primary System Pressure Boundary Integrity FOM2: Integrity of Rotating Equipment	Impeller Failure/1-7	Creep, creep crack growth, thermal loading, rotational stress, fatigue, creep fatigue	M	M
Piping						
V4-6-26	26	Primary System Pressure Boundary Integrity	Breach/1-7, 9	Thermal aging	L	M
V4-6-27	27	Primary System Pressure Boundary Integrity	Breach	Crack initiation and subcritical crack growth	M	M
V4-6-28	28	Primary System Pressure Boundary Integrity	Breach/1-7	High cycle fatigue	M	M
V4-6-29	29	Primary System Pressure Boundary Integrity	Breach/1-7	Erosion	M	M
V4-6-30	30	Peak Fuel Temperature	Insulation Debris Generation/1-7	Aging fatigue, environmental degradation of insulation	H	L
V4-6-31	31	Primary System Pressure Boundary Integrity	Failure to Insulate/1-7	Aging fatigue, environmental degradation of insulation	M	L

Table A-10 continued (High Temperature Materials)

AREVA PIRT ID No.	ID No.	FOM (Evaluation Criteria)	Pathways to Release/Scenario	Phenomena	Phenomena Importance	Knowledge Level
Intermediate Heat Exchanger (IHX) Vessel						
V4-6-32	32	FOM1: Integrity of IHX FOM2: Integrity of Vessel	Breach to Ambient/1-9	Thermal aging	L	H
V4-6-33	33	FOM1: Integrity of IHX FOM2: Integrity of Vessel	Breach to Ambient/1-9	Crack initiation and subcritical crack growth	M	H
V4-6-34	34	FOM1: Integrity of IHX FOM2: Integrity of Vessel	Breach to Ambient/1-9	High cycle fatigue	L	H
Intermediate Heat Exchanger (IHX)						
V4-6-35	35	FOM1: Integrity of IHX FOM2: Secondary Loop Failure/Breach	Breach to Secondary System/1-9	Crack initiation and propagation (due to creep crack growth, creep, creep-fatigue, aging (with or without load), subcritical crack growth)	H	L
V4-6-36	36	FOM1: Integrity of IHX FOM2: Secondary Loop Failure/Breach	Breach to Secondary System/1-9	Primary boundary design methodology limitations for new structures (lack of experience)	H	L
V4-6-37	37	FOM1: Integrity of IHX FOM2: Secondary Loop Failure/Breach	Breach to Secondary System/1-9	Manufacturing phenomena (such as joining)	H	L
V4-6-38	38	FOM1: Integrity of IHX FOM2: Secondary Loop Failure/Breach	Breach to Secondary System/1-9	Inspection/testing phenomena	H	L
V4-6-39	39	FOM1: Integrity of IHX FOM2: Integrity of hot duct (and other systems)	Breach to Secondary System/1-9	Water or chemical ingress/attack	M	M
V4-6-40	40	Integrity of IHX	Catastrophic Loss of Function/9	Plastic instability	M	L

Table A-10 continued (High Temperature Materials)

AREVA PIRT ID No.	ID No.	FOM (Evaluation Criteria)	Pathways to Release/Scenario	Phenomena	Phenomena Importance	Knowledge Level
Control Rods (nonmetallic)						
V4-6-41	41	Maintain Insertion Ability	Failure to Insert/1-12	Radiation-induced degradation	M	L
V4-6-42	42	Maintain Insertion Ability	Failure to Insert/1-12	Oxidation	M	M
V4-6-43	43	Maintain Insertion Ability	Failure to Insert/1-12	Composites structural design methodology limitations for new structures (lack of experience)	H	L
Control Rods (metallic)						
V4-6-44	44	Maintain Insertion Ability	Failure to Insert/1-12	Radiation degradation (embrittlement/swelling/radiation creep)	M	M
V4-6-45	45	Maintain Insertion Ability	Failure to Insert/8, 9, 12	Loss of strength at high temperatures (transient)	M	M
RPV Internals (metallic)						
V4-6-46	46	Maintain Heat Transfer Capability	Inadequate Heat Transfer/8, 9	Change in emissivity	H	L
V4-6-47	47	Maintain Structure Geometry	Excess Deformation/1-9	Radiation-creep	H	L
V4-6-48	48	Maintain Structure Geometry	Fracture/Failure/1-9	Radiation-induced embrittlement	M	M
V4-6-49	49	FOM1: Core Barrel Integrity FOM2: RPV Integrity	Failure/1-9	Creep, creep crack growth, thermal loading	L	M
RPV Internals (nonmetallic)						
V4-6-50	50	FOM1: Maintain Structure Geometry FOM2: Maintain Insulation Capability	Core Restraint and Support Failure/1-12	Radiation-induced degradation	M	L

Table A-10 continued (High Temperature Materials)

AREVA PIRT ID No.	ID No.	FOM (Evaluation Criteria)	Pathways to Release/Scenario	Phenomena	Phenomena Importance	Knowledge Level
V4-6-51	51	FOM1: Maintain Structure Geometry FOM2: Maintain Insulation Capability	Core Restraint and Support Failure/1-12	Oxidation	M	M
V4-6-52	52	Maintain Structure Geometry	Core Restraint Failure/1-12	Composites structural design and fabrication methodology limitations for new structures (lack of experience)	H	L
V4-6-53	53	Maintain Insulation Capability	Fibrous Insulation Degradation/1-12	Environmental and radiation degradation and thermal stability at temperature	H	L
Reactor Cavity Cooling System (RCCS)						
V4-6-54	54	Emergency Heat Removal Capability	Inadequate Heat Removal/8, 9	Aqueous corrosion and fouling	L	H
Auxiliary Shutdown System						
V4-6-55	55	Primary System Pressure Boundary Integrity	Water Contamination of Primary Coolant/2	Fatigue, corrosion-fatigue, stress corrosion cracking, crack initiation and subcritical crack growth, high cycle fatigue	L	H
Valves						
V4-6-56	56	Primary System Pressure Boundary Integrity	Malfunction, Failure to Operate and Breach/1, 2, 5, 9	Isolation valve failure	H	L
V4-6-57	57	Primary System Pressure Boundary Integrity	Failure to Operate, Breach/1-12	Valve failure	H	L
Reactor Cavity Cooling System (RCCS)						
V4-6-58	58	Emergency Heat Removal Capability	Inadequate Heat Removal/8, 9	Change in RCCS Panel Emissivity	M	H

Table A-11: HTGR Event Scenario for Materials PIRT Exercise (Table 2 of NUREG/CR-6944, V4)

Scenario Number	Scenario Type	
1	Normal Operations	Startup
2	Normal Operations	Shutdown
3	Normal Operations	Steady State
4	Normal Operations	Helium Inventory Control
5	Transients	Anticipated Transient Without Scram (ATWS)
6	Transients	Turbine Trip
7	Transients	Loss of Load
8	Postulated Accidents	Pressurized Loss of Forced Circulation
9	Postulated Accidents	Depressurized Loss of Forced Circulation
10	Postulated Accidents	Rupture with Air Ingress
11	Postulated Accidents	Rupture with Water Ingress
12	Postulated Accidents	Reactivity Events

Table A-12: Graphite PIRT Chart (Table 3 and Section 3.9 of NUREG/CR-6944, V5)

AREVA PIRT ID No.	ID No.	Phenomena	Comment	Importance	Knowledge
V5-5-1	1	Statistical variation of non-irradiated properties	The variability in properties of graphite manufactured to given specifications must be accounted for, including the degree of anisotropy. There are implications for mechanical and heat transport properties, as well as for response to chemical attack (purity level), degradation in service and decommissioning. (This aspect is well understood by the graphite designers and has been implemented in the design code of various HTGR designs in the past. The currently ongoing ASME Code development is expected to incorporate these aspects in the design codes and standards.)	H	M
V5-5-2	2	Consistency in graphite quality over the lifetime of the reactor fleet (for replacement, for example).	The concern is with variation in the quality of graphite supply over long-periods of time (e.g., the lifetime of any reactor), and with manufacturing levels associated with a multiple reactor fleet.	H	M
V5-5-3	3	Graphite contains inherent flaws	Need methods for flaw evaluation.	M	M
V5-5-4	4	Cyclic fatigue (non-irradiated)	Implications for structural reliability	M	M
V5-5-5(a)	5(a)	Temperature dependence of non-irradiated thermal properties.	Need analytical models that correlate fundamental graphite properties, such as porosity (size, shape, and orientation), distribution, grain (size, shape, and orientation distribution), and density with non-irradiated properties and predictive models for irradiated properties from non-irradiated properties data.	H	H
V5-5-5(b)	5(b)	Temperature dependence of non-irradiated mechanical properties.	The knowledge level associated with properties influencing these Level 3 criteria was considered higher by one reviewer.	L	H
V5-5-6	6	Irradiation-induced dimensional change	Largest source of internal stress. Need predictive models for irradiated properties from non-irradiated properties data.	H	M
V5-5-7	7	Irradiation-induced creep (irradiation-induced dimensional change under stress)	Could potentially reduce internal stress significantly	H	L

Table A-12 continued (Graphite)

AREVA PIRT ID No.	ID No.	Phenomena	Comment	Importance	Knowledge
V5-5-8	8	Irradiation-induced thermal conductivity change.	Concern is that thermal conductivity might be lower than required by design basis for licensee basis event (LBE) heat removal due to (a) inadequate database to support design over component lifetime and (b) variations in characteristics of graphites from lot to lot; potential is to exceed fuel design temperatures during LBEs.	H	M
V5-5-9	9	Irradiation-induced changes in elastic constants, including the effects of creep strain.	*[no entry]*	H	M
V5-5-10	10	Irradiation-induced change in CTE, including the effects of creep strain.	*[no entry]*	H	L
V5-5-11	11	Irradiation-induced changes in mechanical properties (strength, toughness), including the effect of creep strain (stress).	Tensile, bend, compression, shear (multi-axial), stress strain relationship, fracture, and fatigue strength.	H	L
V5-5-12	12	Stored energy release	Above 150°C, this is considered not to be an issue and above 350°C to be insignificant. Low-temperature release of stored energy is not an issue for HTRs. The reported minimal high-temperature reduction (due to irradiation) of specific heat needs to be confirmed by additional experiments and analyses.	L	M
V5-5-13	13	Annealing of thermal conductivity	During accident improves heat conduction, has beneficial implications for maintaining fuel temperature limit.	M	M
V5-5-14	14	Oxidation of graphite dust	See report: A. Wickham (EPRI report)	M	H
V5-5-15	15	Graphite dust generation	Tribological behavior in helium, f(T, pressure, fluence). Dust particle size distribution.	M	L
V5-5-16	16	Potential changes in irradiated graphite emissivity	Emissivity, f(oxidation, surface roughness).	L	H
V5-5-17	17	Tribology of graphite in (impure) helium environment	*[no entry]*	H	M
V5-5-18	18	Irradiation-induced change in graphite pore structure.	Link to FPT panel.	M	M

Table A-12 continued (Graphite)

AREVA PIRT ID No.	ID No.	Phenomena	Comment	Importance	Knowledge
V5-5-19	19	Temperature-dependent release of fission product (FP) from graphite	Link to FPT panel	L	L
V5-5-20	20	Oxidation of irradiated graphite, including potential adsorbed/absorbed FP	Irradiated graphite will have degraded structure, potentially having enhanced oxidation; it will potentially increase the release of FP. Link to FPT panel.	M	H
V5-6-21	21	Degradation of thermal conductivity	This has implications for fuel temperature limit for loss-of-forced cooling accident.	H	M
V5-6-21(a)	21(a)	Degradation of thermal conductivity	Has implications for maintaining temperature limits for adjacent (metal) components.	M	M
V5-6-22	22	Annealing of thermal conductivity	During accident improves heat conduction – detrimental to adjacent metallic component temperature.	M	M
V5-6-22(a)	22(a)	Annealing of thermal conductivity	During accident improves heat conduction- detrimental to adjacent metallic component temperature.	M	M
V5-6-23	23	Stored energy release	Above 150°C, this is considered not to be an issue and above 350°C to be insignificant. Low-temperature release of stored energy is not an issue for HTRs. The reported minimal high temperature reduction (due to irradiation) of specific heat needs to be confirmed by additional experiments and analyses	L	M
V5-6-24	24	Blockage of fuel element coolant channel (prismatic fuel)	Results in increased fuel temperature in localized areas.		
V5-6-25(a)	25(a)	Foreign object (debris)	Broken pieces of non-graphite core components, such as ceramic tie-rods, etc. Tied to high-temperature materials [carbon fiber composite (CFC)]	M	M
V5-6-25(b)	25(b)	Due to graphite failure, spalling	Debris generated from within the graphite core structures.	H	L
V5-6-25(c)	25(c)	Channel distortion	Deformation from individual graphite blocks and block assemblies. There is a link to the metallic core support structure.	M	M
V5-6-26	26	Blockage of reflector block coolant channel	Results in reduced thermal capacity of the core during accident conditions		

Table A-12 continued (Graphite)

AREVA PIRT ID No.	ID No.	Phenomena	Comment	Importance	Knowledge
V5-6-26(a)	26(a)	Foreign object (debris)	Broken pieces of non-graphite core components, such as ceramic tie-rods, etc. Collapse of upper insulation and deposition onto channel (PCR). Tied to high-temperature materials (CFRC hanger rods).	M	M
V5-6-26(b)	26(b)	Due to graphite failure, spalling	Debris generated from within the graphite core structures.	M	L
V5-6-26(c)	26(c)	Channel distortion	Deformation from individual graphite blocks and/or block assemblies. There is a link to the metallic core support structure.	M	M
V5-6-27	27	Blockage of coolant channel in reactivity control block	Results in damage to the reactivity control components; physical misalignment of channel interfaces.		
V5-6-27(a)	27(a)	Foreign object (debris)	Broken pieces of non-graphite core components, such as ceramic tie-rods, etc. Tied to high- temperature materials [carbon-fiber-reinforced composite (CFRC)].	M	M
V5-6-27(b)	27(b)	Due to graphite failure, spalling	Debris generated from within the graphite core structures.	H	L
V5-6-27(c)	27(c)	Channel distortion	Deformation from individual graphite blocks and/or block assemblies. There is a link to the metallic core support structure.	M	M
V5-6-28	28	Blockage of reactivity control channel	Results in inability to freely insert absorber materials.		
V5-6-28(a)	28(a)	Foreign object (debris)	Broken pieces of non-graphite core components, such as ceramic tie-rods, etc. Tied to high- temperature materials (CFRC).	M	M
V5-6-28(b)	28(b)	Due to graphite failure, spalling	Debris generated from within the graphite core structures.	H	M
V5-6-28(c)	28(c)	Channel distortion	Deformation from individual graphite blocks and/or block assemblies.	M	M
V5-6-29	29	Increased bypass coolant flow channels by break, distortion, etc.	Due to channel distortion, cracking in graphite bricks, etc. Reduced coolant flow through fuel requires higher fuel temperature to maintain the same core outlet temperature.	M	M
V5-6-30	30	Increased bypass coolant flow channels by break, distortion, etc.	If the bypass is near to the adjacent metallic structures, this phenomenon may challenge the temperature limit of metallic structures.	M	M
V5-6-31	31	Outlet plenum collapse	Gross collapse of structures that define the core outlet plenum.		

Table A-12 continued (Graphite)

AREVA PIRT ID No.	ID No.	Phenomena	Comment	Importance	Knowledge
V5-6-31(a)	31(a)	Outlet plenum collapse	Disrupts heat conduction path.	H	H
V5-6-31(b)	31(b)	Outlet plenum collapse	Potentially distortion/displacement of reactivity control channels.	H	H
V5-6-31(c)	31(c)	Outlet plenum collapse	Disrupts coolant flow path	H	H
V5-6-31(d)	31(d)	Outlet plenum collapse	Could potentially result in excessive mechanical load in the fuel.	H	H
V5-6-32	32	Chemical attack	During air/moisture ingress accident, chemical impurities in graphite have effect on the rate of chemical attack.		
V5-6-32(a)	32(a)	Catastrophic chemical attack.	Excessive change in component geometry, such as reduction in cross section, due to large and sustained chemical attack.	H	H
V5-6-32(b)	32(b)	Effect of chronic chemical attack on properties	Change in graphite pore structure due to (slow) chemical attack over long period of time. Degradation of strength, thermal conductivity, Young's modulus. CTE not relevant as per existing data [Hacker, P.J., et al. (1999)]. The consequences have been dealt with for phenomena 12, 13, 14, 15, 16, and 17.	M	M
V5-6-33	33	External (applied) loads	Can become significant if not properly addressed in design. For example, heat up (thermal expansion of core barrel, deformation of the integrated, whole-core graphite structure, dimensional change). Consequences of this phenomena have been addressed in others (e.g., 12 through 17)	M	M
V5-6-34	34	Fast neutron fluence	All graphite component life (structural integrity) predictions rely on an accurate time and spatial calculation of fast neutron fluence (data supplied to graphite specialists by reactor physicists).	H	H
V5-6-35	35	Gamma and neutron heating	About 5% of the heat in a graphite-moderated reactor is generated in the graphite due to gamma and neutron heating. Predictions of the graphite temperatures for use in structural integrity calculations rely on this quantity. Accurate calculation of the spatial distribution of gamma and neutron heating is required to be supplied to the graphite specialist by reactor physicist).	H	H

Table A-12 continued (Graphite)

AREVA PIRT ID No.	ID No.	Phenomena	Comment	Importance	Knowledge
V5-6-36	36	Graphite temperatures	All graphite component life and transient calculations (structural integrity) require time-dependent and spatial predictions of graphite temperatures. Graphite temperatures for normal operation and transients are usually supplied to graphite specialists by thermal-hydraulics specialist. Although in some cases gas temperatures and heat transfer coefficients are supplied, and the graphite specialists calculate the graphite temperatures from these.	H	M

Table A-13: Process Heat and Hydrogen PIRT Chart (Table 4.1 of NUREG/CR-6944, V6)

AREVA PIRT ID No.		Event	Evaluation Criterion	Issue (Phenomena, Process, etc)	Importance	Knowledge Base
V6-4.1-1	*Chemical Releases*	H2 Release	Damage of SSCs	Blast Effects	M	H
V6-4.1-2				Heat Flux	L	M
V6-4.1-3			Operator Impairment	Burn and heat flux to people (VHTR operators)	L	M
V6-4.1-4		O2 Release	Damage of SSCs	Plume Behavior	H	H
V6-4.1-5				Allowable Concentrations	H	M
V6-4.1-6				Spontaneous Combustion	H	M
V6-4.1-7			Operator Impairment	Burn to VHTR Operators	M	M
V6-4.1-8		Flammable Release	Damage of SSCs	Plume Behavior	M	H
V6-4.1-9				Heat Flux	M	H
V6-4.1-10				Blast Effects	M	H
V6-4.1-11			Operator Impairment	Burns to people	M	H
V6-4.1-12		Corrosive Release	Damage of SSCs	Plume Behavior	M	H
V6-4.1-13				Allowable Concentrations	M	M
V6-4.1-14			Operator Impairment	Burns to People	M	M
V6-4.1-15		Toxic Gas Release	Operator Impairment	Plume Behavior	M	M
V6-4.1-16				Toxic Concentrations and Effects	M	M

Table A-13 continued (Process Heat and Hydrogen)

AREVA PIRT ID No.		Event	Evaluation Criterion	Issue (Phenomena, Process, etc)	Importance	Knowledge Base
V6-4.1-17		Suffocation Gas Release	Damage of SSCs	Plume Behavior	M	H
V6-4.1-18				Backup Power/O2 Concentrations	M	H
V6-4.1-19			Operator Impairment	Concentration for People	M	H
V6-4.1-20	*Process Thermal Events*	Loss of Heat Load	Damage of SSCs	Loss of Heat Sink to Reactor	M	M
V6-4.1-21		Temperature Transient	Damage of SSCs	Cyclic Loading	M	M
V6-4.1-22				Harmonics	L	M
V6-4.1-23	*Heat Transport System Failures*	IHX Failure (Intermediate Heat Exchanger)	Damage of SSCs	Blowdown Effects, Large Mass Transfer, Pressurization of Either Secondary or Primary Side	H	M
V6-4.1-24		PHX Failure (Process Heat Exchanger)	Damage of SSCs	Fuel and Primary System Corrosion	H	M
V6-4.1-25		Mass Addition to Reactor (He)	Damage of SSCs	Turbomachinery Response Potential for N_2He Mixture	M	M
V6-4.1-26		Mass Addition to Reactor (Hydrogenous Material, e.g., Steam)	Damage of SSCs	Reactivity Spike due to Neutron Thermalization	H	M
V6-4.1-27				Chemical Attack of TRISO Layers and Graphite	H	M
V6-4.1-28		Loss of Intermediate Fluid	Damage of SSCs	Loss of Heat Sink Cooling, then no Heat Sink IHX Hydrodynamic Loading	H	M

Table A-13 continued (Process Heat and Hydrogen)

AREVA PIRT ID No.		Event	Evaluation Criterion	Issue (Phenomena, Process, etc)	Importance	Knowledge Base
V6-4.1-29	*VHTR Events that Impact Chemical Plant*	Anticipated Operations: Tritium Transport (Long-Term Safety)	Dose to VHTR Plant Workers	Diffusion of 3H	L	H
V6-4.1-30			Dose to Process Gas Users: Industrial and Consumers	Diffusion of 3H	L	H
V6-4.1-31		Radiological Release Pathways Through HX Loops and Plant	Dose to Public	Accident Radionuclide Release	M	M
V6-4.1-32		Generic Power or Thermal Transients Initiated in VHTR	SSC, Stress on IHX or Other Component in Contact with BOP	Stress causes stress on other SSC component	L	M

APPENDIX B: FUEL PIRT CONSOLIDATED SUMMARY LIST

As described in Section 2 NUREG/CR-6844, "TRISO-Coated Particle Fuel Phenomenon Identification and Ranking Tables (PIRTs) for Fission Product Transport Due to Manufacturing, Operations, and Accidents", identifies a total of 328 items that have an impact on the development and qualification of TRISO particle-based fuel for use in the NGNP or other reactors. The level of detail behind these items is far greater than that of the subsequently-developed PIRT items for the NGNP reactor, documented in NUREG/CR-6944, "Next Generation Nuclear Plant Phenomena Identification and Ranking Tables (PIRTs)", and of the AREVA NGNP DDNs to which the PIRT item set is to be compared.

In order to facilitate a reasonable comparison between the TRISO Fuel PIRT results and the AREVA DDN set, a consolidated set of Fuel PIRT items was developed by combining related items from the original Fuel PIRT item set. This set of new, combined PIRT items is presented in Table B-1 along with their associated descriptions and AREVA PIRT ID No. Table B-2 presents a detailed listing of the original TRISO PIRT items and new Fuel PIRT items. Each new Fuel PIRT item is followed by the subordinate original TRISO PIRT items which were combined to make up the new Fuel PIRT item. The listed PIRT table number and item number refer to the tables contained within the NUREG/CR-6844 document.

Table B-1: New, Consolidated Fuel PIRT Items

AREVA PIRT ID No.	Item	Description
VF-N-1	Manufacturing: Kernel Properties	Fuel kernel properties resulting from characteristics of the manufacturing process. Ranges of values for these properties, which have been linked to acceptable operational performance, help define acceptable manufacturing processes.
VF-N-2	Manufacturing: Coating Process	Coating process specifications important to successful production of acceptable coated particles.
VF-N-3	Manufacturing: Coating Properties	Particle coating properties resulting from characteristics of the manufacturing process. Ranges of values for these properties, which have been linked to acceptable operational performance, help define acceptable manufacturing processes.
VF-N-4	Manufacturing: Compact/Pebble	Process specifications and final product characteristics which are required to provide acceptable operational performance of the fuel compact or pebble.
VF-N-5	Kernel: CO Production	Production of CO within the kernel and by kernel-to-buffer interactions during normal operation and accident conditions.
VF-N-6	Kernel: Microstructural Changes	Changes in kernel microstructure under normal operation and accident conditions.
VF-N-7	Kernel: Temperature and Energy Transport	Kernel energy production and temperature conditions under normal operation and accident conditions.
VF-N-8	Kernel: Fission Product Behavior	Concentration, chemical and physical state of fission products within the kernel under normal operation and accident conditions.
VF-N-9	Kernel: Isotopic Mass Transport	Mobility of oxygen and fission products within the kernel under normal operation and accident conditions.
VF-N-10	Kernel: Oxidation	Oxidation behavior of the kernel under air and water ingress conditions, including oxidation rates and impacts on kernel properties.
VF-N-11	Buffer: Gas concentration and pressure evolution	Evolution of gas pressures in the buffer during normal operation.
VF-N-12	Buffer: Fission Product Behavior	Uptake and transport of fission products within and through the buffer layer during normal operation and accident conditions.

Table B-1 continued (New, Consolidated Fuel PIRT Items)

AREVA PIRT ID No.	Item	Description
VF-N-13	Buffer: Mechanical Performance	Mechanical changes in the buffer due to thermal and irradiation effects during normal operation and accidents.
VF-N-14	Buffer: Temperatures	Temperatures in the buffer during normal operation and accidents.
VF-N-15	Buffer: Oxidation	Oxidation of the buffer, and associated property changes, due to interactions with the kernel and fission products, as well as air and water during certain accident scenarios.
VF-N-16	Inner PyC: Mechanical Performance	Mechanical changes in the Inner PyC, due to thermal and irradiation effects during normal operation and accidents.
VF-N-17	Inner PyC: Fission Product Behavior	Uptake and transport of fission products within and through the Inner PyC layer during normal operation and accident conditions.
VF-N-18	Inner PyC: Oxidation	Oxidation of the Inner PyC, and associated property changes, due to interactions with the kernel and fission products, as well as air and water during certain accident scenarios.
VF-N-19	SiC: Chemical Interactions	Interactions between the SiC layer and chemical species, which may impact the integrity of the layer as a fission product barrier. Of particular concern are metallic fission products, especially Pd, and kernel material (in the event of contact between the kernel and the SiC layer).
VF-N-20	SiC: Defect Fission Product Release	Fission product release characteristics through both undetected manufacturing defects and failures during operation (under normal operation and accident conditions).
VF-N-21	SiC: Mechanical Performance	Mechanical changes in the SiC layer due to thermal and irradiation effects during normal operation and accidents.
VF-N-22	SiC: Fission Product Behavior	Uptake and transport of fission products within and through the SiC layer during normal operation and accident conditions.
VF-N-23	SiC: Oxidation	Oxidation of the SiC layer, and associated property changes, due to interactions with the kernel and fission products, as well as air and water during certain accident scenarios.
VF-N-24	Outer PyC: Mechanical Performance	Mechanical changes in the Outer PyC layer, due to thermal and irradiation effects during normal operation and accidents.

Table B-1 continued (New, Consolidated Fuel PIRT Items)

AREVA PIRT ID No.	Item	Description
VF-N-25	Outer PyC: Fission Product Behavior	Uptake and transport of fission products within and through the Outer PyC layer, during normal operation and accident conditions
VF-N-26	Outer PyC: Oxidation	Oxidation of the Outer PyC layer, and associated property changes, due to interactions with the kernel and fission products, as well as air and water during certain accident scenarios.
VF-N-27	Fuel Element: Operational Performance	Operational performance parameters which describe the temperature, power and fluence conditions experienced by the fuel element during both normal operation and accidents.
VF-N-28	Fuel Element: Fission Product Behavior	Uptake and transport of fission products within and through the Fuel Element, during normal operation and accident conditions.
VF-N-29	Fuel Element: Oxidation/Corrosion	Oxidation or corrosion of the Fuel Element, and associated property changes, due to interactions with fission products, as well as air and water during certain accident scenarios.

Table B-2: Original Fuel PIRT Items Associated With Each Consolidated Fuel PIRT Item

AREVA PIRT ID No.	PIRT Table No.	Item No.	Item	Description
VF-N-1	**New**		**Manufacturing: Kernel Properties**	**Fuel kernel properties resulting from characteristics of the manufacturing process. Ranges of values for these properties, which have been linked to acceptable operational performance, help define acceptable manufacturing processes.**
	4-1	34	Kernel: Density	Mass per unit volume in final form
	4-1	35	Kernel: Microstructure (UO2)	Grain size, pore structure (interconnectivity) and orientation in kernel
VF-N-2	**New**		**Manufacturing: Coating Process**	**Coating process specifications important to successful production of acceptable coated particles.**
	4-1	1	Layer coating process specifications: Gases (levitation gas and coating gas)	Gases used to levitate and coat to create layer
	4-1	2	Layer coating process specifications: Ratio of gases	Ratio of active gas to total gas, including concentration
	4-1	3	Layer coating process specifications: Temperature	Temperature of coater
	4-1	4	Layer coating process specifications: Coating Rate	The average deposition rate over space and time of the layer
	4-1	5	Layer coating process specifications: Pressure	Pressure inside coater
	4-1	6	Layer coating process specifications: Coater Size	Size is measured by the diameter of the coater
	4-1	7	Layer coating process	Continuous vapor deposition TRISO coating without unloading of particles
	4-1	8	Process control:	Correlation between measured process parameters and irradiation performance

Table B-2 continued (Original Fuel PIRT Items)

AREVA PIRT ID No.	PIRT Table No.	Item No.	Item	Description
	4-1	9	Product control:	Correlation between measured product parameters and irradiation performance
VF-N-3	**New**		**Manufacturing: Coating Properties**	**Particle coating properties resulting from characteristics of the manufacturing process. Ranges of values for these properties, which have been linked to acceptable operational performance, help define acceptable manufacturing processes.**
	4-1	20	Outer PyC layer: Anisotropy (initial)	Difference in grain orientation along principal directions as measured by the BAF
	4-1	21	Outer PyC layer Porosity	Interconnected void accessible to the surface
	4-1	22	SiC layer Grain size and microstructure, e.g., alignment	Size and orientation of the grains and the pores
	4-1	23	SiC layer Fracture strength	Mean tensile strength (Weibull parameter or equivalent)
	4-1	24	SiC layer: Density	Mass per unit volume
	4-1	25	SiC layer. Bonding strength (SiC to outer PyC)	Interfacial strength at the interface
	4-1	26	SiC layer: Stoichiometry	Ratio of silicon to carbon (absence of gold spots, i.e., elemental Si)
	4-1	27	SiC layer: Heavy metal dispersion	Amount of heavy metals dispersed in the layer present after manufacture
	4-1	28	SiC layer. Defects	Initial undetected pinhole or other defects resulting from the manufacturing process
	4-1	29	Inner PyC layer. Anisotropy (initial)	Difference in crystal orientation along principal directions as measured by the BAF
	4-1	30	Inner PyC layer: Bonding strength (inner PyC to SiC)	Interfacial strength at the interface
	4-1	31	Inner PyC layer Porosity	Interconnected void accessible to the surface
	4-1	32	Buffer layer: Thin or missing	Layer thickness less than specified or missing layer

Table B-2 continued (Original Fuel PIRT Items)

AREVA PIRT ID No.	PIRT Table No.	Item No.	Item	Description
	4-1	33	Buffer layer Density and open porosity	Mass per unit volume and interconnected void accessible to the surface
VF-N-4	**New**		**Manufacturing: Compact/Pebble**	**Process specifications and final product characteristics which are required to provide acceptable operational performance of the fuel compact or pebble.**
	4-1	10	Fuel Element: Particle overcoating (fuel form dependent)	Layer on outside of outer PyC added after coating
	4-1	11	Fuel Element: Matrix and Binder	Filler mixed with resin
	4-1	12	Fuel Element: Bonding strength (PyC to matrix)	Interfacial strength at the interface
	4-1	13	Fuel Element: Compacting	Process of forming fuel element involving molding and pressing
	4-1	14	Fuel Element: Carbonization	Baking full fuel element to drive off volatiles
	4-1	15	Fuel Element: Heat Treatment	High temperature annealing to stabilize fuel form
	4-1	16	Fuel Element: Impurities Control	Minimization of contamination of fuel form by process equipment (e.g., iron, chrome, etc)
	4-1	17	Fuel Element: Tramp Uranium	Uranium introduced by raw materials, e.g., resin
	4-1	18	Fuel Element: Strength	An overall measure of fuel element resistance to stresses that might occur during operation or accidents
	4-1	19	Fuel Element: Initial particle defect fraction due to manufacture	Exposed kernel fraction
VF-N-5	**New**		**Kernel: CO Production**	**Production of CO within the kernel and by kernel-to-buffer interactions during normal operation and accident conditions.**
	4-2	9	Kernel: CO production	Formation of CO from excess oxygen released in fission

Table B-2 continued (Original Fuel PIRT Items)

AREVA PIRT ID No.	PIRT Table No.	Item No.	Item	Description
	4-2	14	Kernel: Buffer interaction	Mechanical and chemical interactions between the kernel and buffer, e.g., chemical reactions at interface and displacement of buffer by kernel growth
	4-3	46	Kernel: Buffer carbon-kernel interaction	Chemical reaction between carbon and the fuel (UO2) to form UC2 and CO (gas)
	4-4	45	Kernel: Buffer carbon-kernel interaction	Chemical reaction between carbon and the fuel (UO2) to form UC2 and CO (gas)
	4-5	73	Kernel: Buffer carbon-kernel interaction	Chemical reaction between carbon and the fuel (UO2) to form UC2 and CO (gas)
	4-6	73	Kernel: Buffer carbon-kernel interaction	Chemical reaction between carbon and the fuel (UO2) to form UC2 and CO (gas)
VF-N-6	**New**		**Kernel: Microstructural Changes**	**Changes in kernel microstructure under normal operation and accident conditions.**
	4-2	11	Kernel: Kernel swelling	Volumetric expansion of kernel resulting from fissioning
	4-2	12	Kernel: Microstructure changes	Change in structure in kernel with burnup, including fission gas bubbles, grain growth and grain disintegration
	4-2	14	Kernel: Buffer interaction	Mechanical and chemical interactions between the kernel and buffer, e.g., chemical reactions at interface and displacement of buffer by kernel growth
	4-3	45	Kernel: Grain growth	Enlargement of grains as a result of diffusion
	4-4	44	Kernel: Grain growth	Enlargement of grains as a result of diffusion
	4-5	72	Kernel: Grain growth	Enlargement of grains as a result of diffusion
	4-6	72	Kernel: Grain growth	Enlargement of grains as a result of diffusion
VF-N-7	**New**		**Kernel: Temperature and Energy Transport**	**Kernel energy production and temperature conditions under normal operation and accident conditions.**
	4-2	17	Kernel: Temperature gradient	Temperature gradient across the kernel

Table B-2 continued (Original Fuel PIRT Items)

AREVA PIRT ID No.	PIRT Table No.	Item No.	Item	Description
	4-3	38	Kernel: Maximum fuel temperature	Maximum fuel temperature attained by the fuel kernel during the accident
	4-3	39	Kernel: Temperature vs. time transient	The time-dependent variation of conditions fuel temperature with time
	4-4	35	Kernel: Maximum fuel temperature	Maximum fuel temperature attained by the fuel kernel during the accident
	4-4	36	Kernel: Temperature vs. time transient conditions	The time-dependent variation of fuel temperature with time
	4-5	67	Kernel: Maximum fuel temperature	Maximum fuel temperature attained by the fuel kernel during the accident
	4-5	68	Kernel: Temperature vs. time transient	The time-dependent variation of conditions fuel temperature with time
	4-6	67	Kernel: Maximum fuel temperature	Maximum fuel temperature attained by the fuel kernel during the accident
	4-6	68	Kernel: Temperature vs. time transient conditions	The time-dependent variation of fuel temperature with time
	4-3	40	Kernel: Energy Transport: Conduction within kernel	Flow of heat within a medium from a region of high temperature to a region of low temperature
	4-4	37	Kernel: Energy deposition (total)	Amount of fission energy generated in kernel during reactivity event (j/gm heavy metal because of Pu)
	4-4	38	Kernel: Energy deposition rate	Rate at which fission energy is generated in kernel
	4-4	39	Kernel: Energy Transport: Conduction within kernel	Flow of heat within a medium from a region of high temperature to a region of low temperature
	4-5	69	Kernel: Energy Transport: Conduction within kernel	Flow of heat within a medium from a region of high temperature to a region of low temperature
	4-6	69	Kernel: Energy Transport: Conduction within kernel	Flow of heat within a medium from a region of high temperature to a region of low temperature

Table B-2 continued (Original Fuel PIRT Items)

AREVA PIRT ID No.	PIRT Table No.	Item No.	Item	Description
VF-N-8	**New**		**Kernel: Fission Product Behavior**	**Concentration, chemical and physical state of fission products within the kernel under normal operation and accident conditions.**
	4-2	10	Kernel: Burnup	Fission of initial metal atoms
	4-2	11	Kernel: Kernel swelling	Volumetric expansion of kernel resulting from fissioning
	4-2	13	Kernel: Fission product chemical form	Chemical speciation of fission products as a function of burnup and temperature
	4-2	16	Kernel: Fission product generation	Yield of fission products from uranium and plutonium fission
	4-2	18	Kernel: Isotopic half life	The time lapse during which a mass of a particular isotope loses half of its radioactivity
	4-3	41	Kernel: Thermodynamic state of fission products	Chemical and physical state of fission products
	4-4	40	Kernel: Thermodynamic state of fission products	Chemical and physical state of fission products
	4-5	70	Kernel: Thermodynamic state of fission products	Chemical and physical state of fission products
	4-6	70	Kernel: Thermodynamic state of fission products	Chemical and physical state of fission products
VF-N-9	**New**		**Kernel: Isotopic Mass Transport**	**Mobility of oxygen and fission products within the kernel under normal operation and accident conditions.**
	4-2	15	Kernel: Kernel migration (fuel dependent)	Kernel migration (fuel dependent)
	4-3	42	Kernel: Gas-phase diffusion	Diffusion of gaseous fission products through layer (Knudsen and bulk diffusion through pore structure, and pressure driven permeation through structure)
	4-3	43	Kernel: Condensed-phase diffusion	Inter-granular diffusion and/or intra-granular solid-state diffusion

Table B-2 continued (Original Fuel PIRT Items)

AREVA PIRT ID No.	PIRT Table No.	Item No.	Item	Description
	4-3	44	Kernel: Oxygen flux	Mass transport of oxygen per unit surface area per unit time
	4-4	41	Kernel: Gas-phase diffusion	Diffusion of gaseous fission products through layer (Knudsen and bulk diffusion through pore structure, and pressure driven permeation through structure)
	4-4	42	Kernel: Condensed-phase diffusion	Inter-granular diffusion and/or intra-granular solid-state diffusion
	4-4	43	Kernel: Oxygen flux	Mass transport of oxygen per unit surface area per unit time
	4-5	71	Kernel: Oxygen flux	Mass transport of oxygen per unit surface area per unit time
	4-6	71	Kernel: Oxygen flux	Mass transport of oxygen per unit surface area per unit time
VF-N-10	**New**		**Kernel: Oxidation**	**Oxidation behavior of the kernel under air and water ingress conditions, including oxidation rates and impacts on kernel properties.**
	4-5	74	Kernel: Chemical attack by water – Kinetics	Rate of reaction per unit surface area as a function of temperature and partial pressure of steam
	4-5	75	Kernel: Chemical attack by water- Catalysis	Modification of the reaction rate by fission products or impurities
	4-5	76	Kernel: Chemical attack by water - Changes in chemical form of fission products	Changes in chemical form resulting from oxidizing or reducing fission products
	4-5	77	Kernel: Chemical attack by water - Changes in kernel properties	Changes in diffusivity, porosity, adsorptivity, etc.
	4-6	74	Kernel: Chemical attack by air – Kinetics	Modification of the reaction rate by fission products or impurities
	4-6	75	Kernel: Chemical attack by air – Catalysis	Modification of the reaction rate by fission products or impurities
	4-6	76	Kernel: Chemical attack by air - Changes in chemical form of fission products	Changes in chemical form resulting from oxidizing or reducing fission products

Table B-2 continued (Original Fuel PIRT Items)

AREVA PIRT ID No.	PIRT Table No.	Item No.	Item	Description
	4-6	77	Kernel: Chemical attack by air - Changes in kernel properties	Changes in diffusivity, porosity, adsorptivity, etc.
VF-N-11	**New**		**Buffer: Gas concentration and pressure evolution**	**Evolution of gas pressures in the buffer during normal operation.**
	4-2	19	Buffer Layer: Pressure	Gas pressure generated in the void volume associated with the buffer layer
	4-2	22	Buffer Layer: Carbonyl vapor species	M-CO species partial pressures
VF-N-12	**New**		**Buffer: Fission Product Behavior**	**Uptake and transport of fission products within and through the buffer layer during normal operation and accident conditions.**
	4-2	24	Buffer Layer: Condensed phase diffusion	Inter-granular diffusion and/or intra-granular solid-state diffusion
	4-2	25	Buffer Layer: Gas phase diffusion	Diffusion of gaseous fission products through layer (Knudsen and bulk diffusion through pore structure, and pressure driven permeation through structure)
	4-3	31	Buffer Layer: Gas-phase diffusion	Diffusion of gaseous fission products through layer (Knudsen and bulk diffusion through pore structure, and pressure driven permeation through structure)
	4-3	32	Buffer Layer: Condensed-phase diffusion	Inter-granular diffusion and/or intra-granular solid-state diffusion
	4-3	34	Buffer Layer: Maximum fuel gaseous fission product uptake	Maximum loading of fission products that can deposit from the gas phase onto surfaces of materials surrounding the fuel kernel
	4-4	28	Buffer Layer: Gas-phase diffusion	Diffusion of gaseous fission products through layer (Knudson and bulk-diffusion through pore structure, and pressure driven permeation through structure)
	4-4	29	Buffer Layer: Condensed-phase diffusion	Inter-granular diffusion and/or intra-granular solid-state diffusion
	4-4	31	Buffer Layer: Maximum fuel gaseous fission product uptake	Maximum loading of fission products that can deposit from the gas phase onto surfaces of materials surrounding the fuel kernel

Table B-2 continued (Original Fuel PIRT Items)

AREVA PIRT ID No.	PIRT Table No.	Item No.	Item	Description
	4-5	54	Buffer Layer: Gas-phase diffusion	Diffusion of gaseous fission products through layer (Knudsen and bulk diffusion through pore structure, and pressure driven permeation through structure)
	4-5	55	Buffer Layer: Condensed-phase diffusion	Inter-granular diffusion and/or intra-granular solid-state diffusion
	4-5	57	Buffer Layer: Maximum fuel gaseous fission product uptake	Maximum loading of fission products that can deposit from the gas phase onto surfaces of materials surrounding the fuel kernel
	4-6	54	Buffer Layer: Gas-phase diffusion	Diffusion of gaseous fission products through layer (Knudsen and bulk diffusion through pore structure, and pressure driven permeation through structure)
	4-6	55	Buffer Layer: Condensed-phase diffusion	Inter-granular diffusion and/or intra-granular solid-state diffusion
	4-6	57	Buffer Layer Maximum fuel gaseous fission product uptake	Maximum loading of fission products that can deposit from the gas phase onto surfaces of materials surrounding the fuel kernel
VF-N-13	**New**		**Buffer: Mechanical Performance**	**Mechanical changes in the buffer due to thermal and irradiation effects during normal operation and accidents.**
	4-2	20	Buffer Layer: Shrinkage	Radiation or otherwise induced dimensional change
	4-2	21	Buffer Layer: Cracking	Shrinkage cracks produced in layer during operation
	4-2	26	Buffer Layer: Recoil effects	Buffer damage arising from capture of high-energy fission products
	4-3	33	Buffer Layer: Response to kernel swelling	Mechanical reaction of the layer to the growth of the kernel via swelling
	4-3	37	Buffer Layer Irradiation and thermal shrinkage	Dimension changes in the buffer layer or changes in its porosity produced by irradiation or by exposure to elevated temperatures
	4-4	30	Buffer Layer Response to kernel swelling	Mechanical reaction of the layer to the growth of the kernel via swelling
	4-4	34	Buffer Layer: Irradiation and thermal shrinkage	Dimension changes in the buffer layer or changes in its porosity produced by irradiation or by exposure to elevated temperatures

Table B-2 continued (Original Fuel PIRT Items)

AREVA PIRT ID No.	PIRT Table No.	Item No.	Item	Description
	4-5	56	Buffer Layer: Response to kernel swelling	Mechanical reaction of the layer to the growth of the kernel via swelling
	4-5	60	Buffer Layer: Irradiation and thermal shrinkage	Dimension changes in the buffer layer or changes in its porosity produced by irradiation or by exposure to elevated temperatures
	4-6	56	Buffer Layer: Response to kernel swelling	Mechanical reaction of the layer to the growth of the kernel via swelling
	4-6	60	Buffer Layer: Irradiation and thermal shrinkage	Dimension changes in the buffer layer or changes in its porosity produced by irradiation or by exposure to elevated temperatures
VF-N-14	**New**		**Buffer: Temperatures**	**Temperatures in the buffer during normal operation and accidents.**
	4-2	23	Buffer Layer: Temperature gradient	Temperature difference across the buffer layer
	4-3	36	Buffer Layer Thermal gradient	Change in temperature with distance
	4-4	33	Buffer Layer Thermal gradient	Change in temperature with distance
	4-5	59	Buffer Layer: Thermal gradient	Change in temperature with distance
	4-6	59	Buffer Layer: Thermal gradient	Change in temperature with distance
VF-N-15	**New**		**Buffer: Oxidation**	**Oxidation of the buffer, and associated property changes, due to interactions with the kernel and fission products, as well as air and water during certain accident scenarios.**
	4-3	35	Buffer Layer: Layer oxidation	Reaction of buffer layer with-oxide materials in the kernel
	4-4	32	Buffer Layer: Layer oxidation	Reaction of buffer layer with oxide materials in the kernel
	4-5	58	Buffer Layer: Layer oxidation	Reaction of buffer layer with oxide materials in the kernel
	4-5	61	Buffer Layer: Chemical attack by water – Kinetics	Rate of reaction per unit surface area as a function of temperature and partial pressure of steam
	4-5	62	Buffer Layer: Chemical attack by water – Catalysis	Modification of the reaction rate by fission products or impurities

Table B-2 continued (Original Fuel PIRT Items)

AREVA PIRT ID No.	PIRT Table No.	Item No.	Item	Description
	4-5	63	Buffer Layer: Chemical attack by water - Changes in chemical form of fission products	Changes in chemical form resulting from oxidizing or reducing fission products
	4-5	65	Buffer Layer Chemical attack by water - Holdup reversals	Release of graphite FP inventory
	4-5	66	Buffer Layer: Chemical attack by water - Temperature distributions	Impact of graphite oxidation on temperature distribution through material
	4-6	58	Buffer Layer: Layer oxidation	Reaction of buffer layer with oxide materials in the kernel
	4-6	61	Buffer Layer: Chemical attack by air – Kinetics	Modification of the reaction rate by fission products or impurities
	4-6	62	Buffer Layer: Chemical attack by air – Catalysis	Modification of the reaction rate by fission products or impurities
	4-6	63	Buffer Layer: Chemical attack by air - Changes in chemical form of fission products	Changes in chemical form resulting from oxidizing or reducing fission products
	4-6	64	Buffer Layer: Chemical attack by air - Changes in graphite properties	Changes in diffusivity, porosity, adsorptivity, etc.
	4-6	65	Buffer Layer: Chemical attack by air - Holdup reversal	Release of graphite FP inventory
	4-6	66	Buffer Layer: Chemical attack by air - Temperature distributions	Impact of graphite oxidation on temperature distribution through material
VF-N-16	**New**		**Inner PyC: Mechanical Performance**	**Mechanical changes in the Inner PyC, due to thermal and irradiation effects during normal operation and accidents.**
	4-2	27	Inner PyC layer: Radiation induced creep	Strain release as a result of radiation induced dimensional change
	4-2	28	Inner PyC layer: Fast fluence	Accumulated fast neutron fluence greater than 0.18 MeV

Table B-2 continued (Original Fuel PIRT Items)

AREVA PIRT ID No.	PIRT Table No.	Item No.	Item	Description
	4-2	29	Inner PyC layer: Dimensional change	Unrestrained radial and tangential changes with fast fluence
	4-2	30	Inner PyC layer: Anisotropy	Operation-induced (thermal + radiation) change in grain orientation along principal directions as measured by the BAF
	4-2	31	Inner PyC layer. Cracking	Lengths, widths, and numbers of cracks produced in layer during operation
	4-2	32	Inner PyC layer: Debonding	Separation of PyC layer from SiC layer
	4-3	24	Inner PyC Layer: Pressure loading (Fission products)	Stress loading of the layer by increased pressure from fission products
	4-3	25	Inner PyC Layer: Pressure loading (Carbon monoxide)	Stress loading of the layer by carbon monoxide by increased pressure
	4-3	27	Inner PyC Layer: Stress state (compression/tension)	The state of the forces induced by external forces that are acting across the layer to resist movement
	4-3	28	Inner PyC Layer. Cracking	Lengths, widths and numbers of cracks produced in layer during accident
	4-4	23	Inner PyC Layer: Pressure loading (Fission products)	Stress loading of the layer by increased pressure from fission products
	4-4	24	Inner PyC Layer: Pressure loading (Carbon monoxide)	Stress loading of the layer by carbon monoxide by increased pressure
	4-4	26	Inner PyC Layer: Stress state (compression/tension)	The state of the forces induced by external forces that are acting across the layer to resist movement
	4-5	42	Inner PyC Layer: Pressure loading (Fission products)	Stress loading of the layer by increased pressure from fission products
	4-5	43	Inner PyC Layer: Pressure loading (Carbon monoxide)	Stress loading of the layer by carbon monoxide by increased pressure
	4-5	45	Inner PyC Layer: Stress state (compression/tension)	The state of the forces induced by external forces that are acting across the layer to resist movement

Table B-2 continued (Original Fuel PIRT Items)

AREVA PIRT ID No.	PIRT Table No.	Item No.	Item	Description
	4-5	46	Inner PyC Layer: Cracking	Lengths, widths and numbers of cracks produced in layer during accident
	4-6	42	Inner PyC Layer: Pressure loading (Fission products)	Stress loading of the layer by increased pressure from fission products
	4-6	43	Inner PyC Layer: Pressure loading (Carbon monoxide)	Stress loading of the layer by carbon monoxide by increased pressure
	4-6	45	Inner PyC Layer Stress state (compression/tension)	The state of the forces induced by external forces that are acting across the layer to resist movement
	4-6	46	Inner PyC Layer: Cracking	Lengths, widths and numbers of cracks produced in layer during accident
VF-N-17	**New**		**Inner PyC: Fission Product Behavior**	**Uptake and transport of fission products within and through the Inner PyC layer during normal operation and accident conditions.**
	4-2	33	Inner PyC layer: Condensed phase diffusion	Inter-granular diffusion and/or intra-granular solid-state diffusion
	4-2	34	Inner PyC layer: Gas phase diffusion	Diffusion of gaseous fission products through layer (Knudsen and bulk diffusion through pore structure, and pressure driven permeation through structure)
	4-3	22	Inner PyC Layer. Gas-phase diffusion	Diffusion of gaseous fission products through layer (Knudsen and bulk diffusion through pore structure, and pressure driven permeation through structure)
	4-3	23	Inner PyC Layer. Condensed-phase diffusion	Inter-granular diffusion and/or intra-granular solid-state diffusion
	4-3	29	Inner PyC Layer: Intercalation	Trapping of species between the basal planes of the structure.
	4-3	30	Inner PyC Layer: Trapping	Adsorption of fission products on defects
	4-4	21	Inner PyC Layer Gas-phase diffusion	Diffusion of gaseous fission products through layer (Knudsen and bulk diffusion through pore structure, and pressure driven permeation through structure)

Table B-2 continued (Original Fuel PIRT Items)

AREVA PIRT ID No.	PIRT Table No.	Item No.	Item	Description
	4-4	22	Inner PyC Layer: Condensed-phase diffusion	Inter-granular diffusion and/or intra-granular solid-state diffusion
	4-4	27	Inner PyC Layer: Intercalation	Trapping of species between the basal planes of the structure
	4-5	40	Inner PyC Layer: Gas-phase diffusion	Diffusion of gaseous fission products through layer (Knudsen and bulk diffusion through pore structure, and pressure driven permeation through structure)
	4-5	41	Inner PyC Layer: Condensed-phase diffusion	Inter-granular diffusion and/or intra-granular solid-state diffusion
	4-5	47	Inner PyC Layer: Intercalation	Trapping of species between sheets of the graphite structure
	4-6	40	Inner PyC Layer: Gas-phase diffusion	Diffusion of gaseous fission products through layer (Knudson and bulk diffusion through pore structure, and pressure driven permeation through structure)
	4-6	41	Inner PyC Layer: Condensed-phase diffusion	Inter-granular diffusion and/or intra-granular solid- state diffusion
	4-6	47	Inner PyC Layer: Intercalation	Trapping of species between sheets of the graphite structure
VF-N-18	**New**		**Inner PyC: Oxidation**	**Oxidation of the Inner PyC, and associated property changes, due to interactions with the kernel and fission products, as well as air and water during certain accident scenarios.**
	4-3	26	Inner PyC Layer: Layer oxidation	Reaction of pyrolytic graphite with oxygen released from the kernel
	4-4	25	Inner PyC Layer: Layer oxidation	Reaction of pyrolytic graphite with oxygen released from the kernel
	4-5	44	Inner PyC Layer: Layer oxidation	Reaction of pyrolytic graphite with oxygen released from the kernel
	4-5	48	Inner PyC Layer Chemical attack by water – Kinetics	Rate of reaction per unit surface area as a function of temperature and partial pressure of steam
	4-5	49	Inner PyC Layer: Chemical attack by water – Catalysis	Modification of the reaction rate by fission products or impurities
	4-5	50	Inner PyC Layer Chemical attack by water - Changes in chemical form of fission products	Changes in chemical form resulting from oxidizing or reducing fission products

Table B-2 continued (Original Fuel PIRT Items)

AREVA PIRT ID No.	PIRT Table No.	Item No.	Item	Description
	4-5	51	Inner PyC Layer: Chemical attack by water - Changes in graphite properties	Changes in diffusivity, porosity, adsorptivity, etc
	4-5	52	Inner PyC Layer: Chemical attack by water - Holdup reversals	Release of graphite FP inventory
	4-5	53	Inner PyC Layer: Chemical attack by water - Temperature distributions	Impact of graphite oxidation on temperature distribution through material
	4-5	64	Inner PyC Layer: Chemical attack by water - Changes in graphite properties	Changes in diffusivity, porosity, adsorptivity, etc.
	4-6	44	Inner PyC Layer: Layer oxidation	Reaction of pyrolytic graphite with oxygen released from the kernel
	4-6	48	Inner PyC Layer Chemical attack by air – Kinetics	Modification of the reaction rate by fission products or impurities
	4-6	49	Inner PyC Layer Chemical attack by air – Catalysis	Modification of the reaction rate by fission products or impurities
	4-6	50	Inner PyC Layer: Chemical attack by air - Changes in chemical form of fission products	Changes in chemical form resulting from oxidizing or reducing fission products
	4-6	51	Inner PyC Layer: Chemical attack by air - Changes in graphite properties	Changes in diffusivity, porosity, adsorptivity, etc.
	4-6	52	Inner PyC Layer: Chemical attack by air - Holdup reversal	Release of graphite FP inventory
	4-6	53	Inner PyC Layer: Chemical attack by air - Temperature distributions	Impact of graphite oxidation on temperature distribution through material

Table B-2 continued (Original Fuel PIRT Items)

AREVA PIRT ID No.	PIRT Table No.	Item No.	Item	Description
VF-N-19	**New**		**SiC: Chemical Interactions**	**Interactions between the SiC layer and chemical species, which may impact the integrity of the layer as a fission product barrier. Of particular concern are metallic fission products, especially Pd, and kernel material (in the event of contact between the kernel and the SiC layer).**
	4-2	35	SiC layer. Kernel interaction with SiC layer	Kernel migration (amoeba effect)
	4-2	36	SiC layer: Fission product corrosion	Attack of layer by fission products, e.g., Pd
	4-2	37	SiC layer: Heavy metal attack	Damage to layer due to fissioning of heavy metals dispersed in the layer
	4-3	15	SiC Layer: Fission product corrosion	Attack of layer by fission products, e.g., Pd
	4-3	20	SiC Layer Thermodynamics of the SiC-fission product system	Chemical form of fission products including the effects of solubility, intermetallics and chemical activity
	4-4	14	SiC Layer: Fission product corrosion	Attack of layer by fission products, e.g., Pd
	4-4	19	SiC Layer: Thermodynamics of the SiC-fission product system	Chemical form of fission products including the effects of solubility, intermetallics, and chemical activity
	4-5	27	SiC Layer: Fission product corrosion	Attack of layer by fission products, e.g., Pd
	4-5	32	SiC Layer: Thermodynamics of the SiC-fission product system	Chemical form of fission products including the effects of solubility, intermetallics, and chemical activity
	4-6	27	SiC Layer: Fission product corrosion	Attack of layer by fission products, e.g., Pd
	4-6	32	SiC Layer: Thermodynamics of the SiC-fission product system	Chemical form of fission products including the effects of solubility, intermetallics, and chemical activity

Table B-2 continued (Original Fuel PIRT Items)

AREVA PIRT ID No.	PIRT Table No.	Item No.	Item	Description
VF-N-20	**New**		**SiC: Defect Fission Product Release**	**Fission product release characteristics through both undetected manufacturing defects and failures during operation (under normal operation and accident conditions).**
	4-3	18	SiC Layer: Fission product release through undetected defects	Passage of products from the buffer region through defects in the SiC layer
	4-3	19	SiC Layer: Fission product release through failures, e.g., cracking	Passage of fission products from the buffer region through regions in the SiC layer that fail during operation or an accident
	4-4	17	SiC Layer: Fission product release through undetected defects, e.g., cracking	Passage of fission products from the buffer region through regions in the SiC layer that fail during operation or an accident
	4-4	18	SiC Layer: Fission product release through failures, e.g., cracking	Passage of fission products from the buffer region through regions in the SiC layer that fail during operation or an accident
	4-5	30	SiC Layer: Fission product release through undetected defects	Passage of fission products from the buffer region through regions in the SiC layer that fail during operation or an accident
	4-5	31	SiC Layer: Fission product release through failures, e.g., cracking	Passage of fission products from the buffer region through regions in the SiC layer that fail during operation or an accident
	4-6	30	SiC Layer: Fission product release through undetected defects	Passage of fission products from the buffer region through regions in the SiC layer that fail during operation or an accident
	4-6	31	SiC Layer: Fission product release through failures, e.g., cracking	Passage of fission products from the buffer region through regions in the SiC layer that fail during operation or an accident

Table B-2 continued (Original Fuel PIRT Items)

AREVA PIRT ID No.	PIRT Table No.	Item No.	Item	Description
VF-N-21	**New**		**SiC: Mechanical Performance**	**Mechanical changes in the SiC layer due to thermal and irradiation effects during normal operation and accidents.**
	4-2	38	SiC layer: Cracking	Lengths, widths and numbers of cracks produced in layer during operation
	4-3	14	SiC Layer: Thermal deterioration/decomposition	Decline in the quality of the layer due to thermal loading
	4-4	13	SiC Layer: Thermal deterioration/decomposition	Decline in the quality of the layer due to thermal loading
	4-3	21	SiC Layer: Sintering	Change of SiC microstructure as a function of temperature
	4-4	20	SiC Layer: Sintering	Change of graphite microstructure as a function of temperature
	4-5	26	SiC Layer: Thermal deterioration/decomposition	Decline in the quality of the layer due to thermal loading
	4-5	33	SiC Layer: Sintering	Change of SiC microstructure as a function of temperature
	4-6	26	SiC Layer: Thermal deterioration/decomposition	Decline in the quality of the layer due to thermal loading
	4-6	33	SiC Layer: Sintering	Change of SiC microstructure as a function of temperature
VF-N-22	**New**		**SiC: Fission Product Behavior**	**Uptake and transport of fission products within and through the SiC layer during normal operation and accident conditions.**
	4-2	39	SiC layer: Condensed phase diffusion	Inter-granular diffusion and/or intra-granular solid-state diffusion
	4-2	40	SiC layer: Gas phase diffusion	Diffusion of gaseous fission products through layer (Knudsen and bulk diffusion through pore structure, and pressure driven permeation through structure)
	4-3	12	SiC Layer. Gas-phase diffusion	Diffusion of gaseous fission products through layer (Knudsen and bulk diffusion through pore structure, and pressure driven permeation through structure)

Table B-2 continued (Original Fuel PIRT Items)

AREVA PIRT ID No.	PIRT Table No.	Item No.	Item	Description
	4-3	13	SiC Layer: Condensed-phase diffusion	Inter-granular diffusion and/or intra-granular solid-state diffusion
	4-3	16	SiC Layer: Heavy metal diffusion	Diffusion of heavy metals through the intact layer
	4-3	20	SiC Layer Thermodynamics of the SiC-fission product system	Chemical form of fission products including the effects of solubility, intermetallics and chemical activity
	4-4	11	SiC Layer: Gas-phase diffusion	Diffusion of gaseous fission products through layer (Knudsen and bulk diffusion through pore structure, and pressure driven permeation through structure)
	4-4	12	SiC Layer: Condensed-phase diffusion	Inter-granular diffusion and/or intra-granular solid-state diffusion
	4-4	15	SiC Layer: Heavy metal diffusion	Diffusion of heavy metals through layer
	4-4	19	SiC Layer: Thermodynamics of the SiC-fission product system	Chemical form of fission products including the effects of solubility, intermetallics, and chemical activity
	4-5	24	SiC Layer: Gas-phase diffusion	Diffusion of gaseous fission products through layer (Knudsen and bulk diffusion through pore structure, and pressure driven permeation through structure)
	4-5	25	SiC Layer: Condensed-phase diffusion	Inter-granular diffusion and/or intra-granular solid-state diffusion
	4-5	28	SiC Layer: Heavy metal diffusion	Diffusion of heavy metals through the intact layer
	4-5	32	SiC Layer: Thermodynamics of the SiC-fission product system	Chemical form of fission products including the effects of solubility, intermetallics, and chemical activity
	4-6	24	SiC Layer: Gas-phase diffusion	Diffusion of gaseous fission products through layer (Knudsen and bulk diffusion through pore structure, and pressure driven permeation through structure)
	4-6	25	SiC Layer Condensed-phase diffusion	Inter-granular diffusion and/or intra-granular solid-state diffusion
	4-6	28	SiC Layer: Heavy metal diffusion	Diffusion of heavy metals through the intact layer

Table B-2 continued (Original Fuel PIRT Items)

AREVA PIRT ID No.	PIRT Table No.	Item No.	Item	Description
	4-6	32	SiC Layer: Thermodynamics of the SiC-fission product system	Chemical form of fission products including the effects of solubility, intermetallics, and chemical activity
VF-N-23	**New**		**SiC: Oxidation**	**Oxidation of the SiC layer, and associated property changes, due to interactions with the kernel and fission products, as well as air and water during certain accident scenarios.**
	4-3	17	SiC Layer: Layer oxidation	Uptake of oxygen by the layer through a chemical reaction
	4-4	16	SiC Layer: Layer oxidation	Uptake of oxygen by the layer through a chemical reaction
	4-5	29	SiC Layer: Layer oxidation	Uptake of oxygen by the layer through a chemical reaction
	4-5	34	SiC Layer: Chemical attack by water – Kinetics	Rate of reaction per unit surface area as a function of temperature and partial pressure of steam
	4-5	35	SiC Layer Chemical attack by water – Catalysis	Modification of the reaction rate by fission products or impurities
	4-5	36	SiC Layer: Chemical attack by water - Changes in chemical form of fission products	Changes in chemical form resulting from oxidizing or reducing fission products
	4-5	37	SiC Layer: Chemical attack by water - Changes in SiC properties	Changes in diffusivity, porosity, adsorptivity, etc.
	4-5	38	SiC Layer: Chemical attack by water - Holdup reversals	Release of graphite FP inventory
	4-5	39	SiC Layer: Chemical attack by water - Temperature distributions	Impact of graphite oxidation on temperature distribution through material
	4-6	29	SiC Layer: Layer oxidation	Uptake of oxygen by the layer through a chemical reaction
	4-6	34	SiC Layer: Chemical attack by air – Kinetics	Modification of the reaction rate by fission products or impurities
	4-6	35	SiC Layer: Chemical attack by air – Catalysis	Modification of the reaction rate by fission products or impurities

Table B-2 continued (Original Fuel PIRT Items)

AREVA PIRT ID No.	PIRT Table No.	Item No.	Item	Description
	4-6	36	SiC Layer: Chemical attack by air - Changes in chemical form of fission products	Changes in chemical form resulting from oxidizing or reducing fission products
	4-6	37	SiC Layer: Chemical attack by air - Changes in SiC properties	Changes in diffusivity, porosity, adsorptivity, etc.
	4-6	38	SiC Layer: Chemical attack by air - Holdup reversal	Release of graphite FP inventory
	4-6	39	SiC Layer: Chemical attack by air - Temperature distributions	Impact of graphite oxidation on temperature distribution through material
VF-N-24	**New**		**Outer PyC: Mechanical Performance**	**Mechanical changes in the Outer PyC layer, due to thermal and irradiation effects during normal operation and accidents.**
	4-2	41	Outer PyC layer: Radiation induced creep	Strain release as a result of radiation induced dimensional change
	4-2	42	Outer PyC layer: Dimensional change	Unrestrained radial and tangential changes with fast fluence
	4-2	43	Outer PyC layer: Anisotropy	Operation-induced (thermal + radiation) change in grain orientation along principal directions as measured by the BAF
	4-2	46	Outer PyC layer: Cracking	Lengths, widths and numbers of cracks produced in layer during operation
	4-3	8	Outer PyC Layer: Stress state (compression/tension)	The state of the forces induced by external forces that are acting across the layer to resist movement
	4-3	11	Outer PyC Layer: Cracking	Lengths, widths and numbers of cracks produced in layer during operation or an accident
	4-4	8	Outer PyC Layer: Stress state (compression/tension)	The state of the forces induced by external forces that are acting across the layer to resist movement.
	4-5	14	Outer PyC Layer: Stress state (compression/tension)	The state of the forces induced by external forces that are acting across the layer to resist movement

Table B-2 continued (Original Fuel PIRT Items)

AREVA PIRT ID No.	PIRT Table No.	Item No.	Item	Description
	4-5	17	Outer PyC Layer: Cracking	Lengths, widths and numbers of cracks produced in layer during operation or an accident
	4-6	14	Outer PyC Layer: Stress state (compression/tension)	The state of the forces induced by external forces that are acting across the layer to resist movement
	4-6	17	Outer PyC Layer: Cracking	Lengths, widths and numbers of cracks produced in layer during operation or an accident
VF-N-25	**New**		**Outer PyC: Fission Product Behavior**	**Uptake and transport of fission products within and through the Outer PyC layer, during normal operation and accident conditions.**
	4-2	44	Outer PyC layer: Condensed phase diffusion	Solid state diffusion
	4-2	45	Outer PyC layer: Gas phase diffusion	Transport through pores and void structures by vapors, e.g., noble gases
	4-3	5	Outer PyC Layer Gas-phase diffusion	Diffusion of gaseous fission products through layer (Knudsen and bulk diffusion through pore structure, and pressure driven permeation through structure)
	4-3	6	Outer PyC Layer: Condensed-phase diffusion	Inter-granular diffusion and/or intra-granular solid-state diffusion
	4-3	9	Outer PyC Layer: Intercalation	Trapping of species between sheets of the graphite structure
	4-3	10	Outer PyC Layer: Trapping	Adsorption of fission products on defects
	4-4	5	Outer PyC Layer: Gas-phase diffusion	Diffusion of gaseous fission products through layer (Knudsen and bulk diffusion through pore structure, and pressure driven permeation through structure)
	4-4	6	Outer PyC Layer: Condensed-phase diffusion	Inter-granular diffusion and/or intra-granular solid-state diffusion
	4-4	9	Outer PyC Layer: Intercalation	Trapping of species between sheets of the graphite structure entry
	4-4	10	Outer PyC Layer: Trapping	Adsorption of fission products on defects

Table B-2 continued (Original Fuel PIRT Items)

AREVA PIRT ID No.	PIRT Table No.	Item No.	Item	Description
	4-5	11	Outer PyC Layer: Gas-phase diffusion	Diffusion of gaseous fission products through layer (Knudsen and bulk diffusion through pore structure, and pressure driven permeation through structure)
	4-5	12	Outer PyC Layer: Condensed-phase diffusion	Inter-granular diffusion and/or intra-granular solid-state diffusion
	4-5	15	Outer PyC Layer: Intercalation	Trapping of species between sheets of the graphite structure
	4-5	16	Outer PyC Layer: Trapping	Adsorption of fission products on defects
	4-6	11	Outer PyC Layer: Gas-phase diffusion	Diffusion of gaseous fission products through layer (Knudsen and bulk diffusion through pore structure, and pressure driven permeation through structure)
	4-6	12	Outer PyC Layer: Condensed-phase diffusion	Inter-granular diffusion and/or intra-granular solid-state diffusion
	4-6	15	Outer PyC Layer: Intercalation	Trapping of species between sheets of the graphite structure
	4-6	16	Outer PyC Layer: Trapping	Adsorption of fission products on defects
VF-N-26	**New**		**Outer PyC: Oxidation**	**Oxidation of the Outer PyC layer, and associated property changes, due to interactions with the kernel and fission products, as well as air and water during certain accident scenarios.**
	4-3	7	Outer PyC Layer: Layer oxidation	Uptake of oxygen by the layer through a chemical reaction
	4-4	7	Outer PyC Layer: Layer oxidation	Uptake of oxygen by the layer through a chemical reaction
	4-5	13	Outer PyC Layer: Layer oxidation	Uptake of oxygen by the layer through a chemical reaction
	4-5	18	Outer PyC Layer: Chemical attack by water – Kinetics	Rate of reaction per unit surface area as a function of temperature and partial pressure of steam
	4-5	19	Outer PyC Layer: Chemical attack by water – Catalysis	Modification of the reaction rate by fission products or impurities

Table B-2 continued (Original Fuel PIRT Items)

AREVA PIRT ID No.	PIRT Table No.	Item No.	Item	Description
	4-5	20	Outer PyC Layer: Chemical attack by water - Changes in chemical form of fission products	Changes in chemical form resulting from oxidizing or reducing fission products
	4-5	21	Outer PyC Layer: Chemical attack by water - Changes in graphite properties	Changes in diffusivity, porosity, adsorptivity, etc.
	4-5	22	Outer PyC Layer: Chemical attack by water - Holdup reversals	Release of graphite FP inventory
	4-5	23	Outer PyC Layer: Chemical attack by water - Temperature distributions	Impact of graphite oxidation on temperature distribution through material
	4-6	13	Outer PyC Layer: Layer oxidation	Uptake of oxygen by the layer through a chemical reaction
	4-6	18	Outer PyC Layer: Chemical attack by air – Kinetics	Modification of the reaction rate by fission products or impurities
	4-6	19	Outer PyC Layer: Chemical attack by air – Catalysis	Modification of the reaction rate by fission products or impurities
	4-6	20	Outer PyC Layer: Chemical attack by air - Changes in chemical form of fission products	Changes in chemical form resulting from oxidizing or reducing fission products
	4-6	21	Outer PyC Layer: Chemical attack by air - Changes in graphite properties	Changes in diffusivity, porosity, adsorptivity, etc.
	4-6	22	Outer PyC Layer: Chemical attack by air - Holdup reversal	Release of graphite FP inventory
	4-6	23	Outer PyC Layer: Chemical attack by air - Temperature distributions	Impact of graphite oxidation on temperature distribution through material

Table B-2 continued (Original Fuel PIRT Items)

AREVA PIRT ID No.	PIRT Table No.	Item No.	Item	Description
VF-N-27	**New**		**Fuel Element: Operational Performance**	**Operational performance parameters which describe the temperature, power and fluence conditions experienced by the fuel element during both normal operation and accidents.**
	4-2	1	Fuel element: Temperature	Local temperature in the fuel element
	4-2	2	Fuel element: Fast fluence	Accumulated fast neutron fluence greater than 0.18 MeV
	4-2	3	Fuel element: Power density	Power per pebble or compact (W)
	4-2	4	Fuel element: Temperature difference	Temperature between center or centerline and surface in °C
	4-2	5	Fuel element: Temperature-time histories	Local temporal temperature of fuel element over its lifetime
	4-3	1	Fuel Element: Irradiation history	The temperature, burnup and fast fluence history of the layer
	4-4	1	Fuel Element: Irradiation history	The temperature, burnup and fast fluence history of the layer
	4-5	1	Fuel Element: Irradiation history	The temperature, burnup and fast fluence history of the layer
	4-6	1	Fuel Element: Irradiation history	The temperature, burnup and fast fluence history of the layer
VF-N-28	**New**		**Fuel Element: Fission Product Behavior**	**Uptake and transport of fission products within and through the Fuel Element, during normal operation and accident conditions.**
	4-2	6	Fuel element: Condensed phase diffusion	Inter-granular diffusion and/or intra-granular solid-state diffusion
	4-2	7	Fuel element: Gas phase diffusion	Diffusion of gaseous fission products through layer (Knudsen and bulk diffusion through pore structure, and pressure driven permeation through structure)
	4-3	2	Fuel Element: Condensed phase diffusion	Inter-granular diffusion and/or intra-granular solid-state diffusion
	4-3	3	Fuel Element: Gas phase diffusion	Diffusion of gaseous fission products through layer (Knudsen and bulk diffusion through pore structure, and pressure driven permeation through structure). Other factors include holdup, cracking, adsorption, site poisoning, permeability, sintering, and annealing

Table B-2 continued (Original Fuel PIRT Items)

AREVA PIRT ID No.	PIRT Table No.	Item No.	Item	Description
	4-3	4	Fuel Element: Transport of metallic FPs through fuel element - Chemical form	Chemical stoichiometry of the chemical species that includes the radioisotope of interest
	4-4	2	Fuel Element: Condensed-phase diffusion	Inter-granular diffusion and/or intra-granular solid-state diffusion
	4-4	3	Fuel Element: Gas-phase diffusion	Diffusion of gaseous fission products through layer (Knudsen and bulk diffusion through pore structure, and pressure driven permeation through structure). Other factors include holdup, cracking, adsorption, site poisoning, permeability, sintering, and annealing.
	4-4	4	Fuel Element: Transport of metallic FPs through fuel element - Chemical form	Chemical stoichiometry of the chemical species that includes the radioisotope of interest
	4-5	2	Fuel Element: Condensed phase diffusion	Inter-granular diffusion and/or intra-granular solid-state diffusion
	4-5	3	Fuel Element: Gas phase diffusion	Diffusion of gaseous fission products through layer (Knudsen and bulk diffusion through pore structure, and pressure driven permeation through structure). Other factors include holdup, cracking, adsorption, site poisoning, permeability, sintering, and annealing
	4-5	4	Fuel Element: Transport of metallic FPs through fuel element - Chemical form	Chemical stoichiometry of the chemical species that includes the radioisotope of interest
	4-6	2	Fuel Element: Condensed phase diffusion	Inter-granular diffusion and/or intra-granular solid-state diffusion
	4-6	3	Fuel Element: Gas phase diffusion	Diffusion of gaseous fission products through layer (Knudsen and bulk diffusion through pore structure, and pressure driven permeation through structure). Other factors include holdup, cracking, adsorption, site poisoning, permeability, sintering, and annealing
	4-6	4	Fuel Element: Transport of metallic FPs through fuel element - Chemical form	Chemical stoichiometry of the chemical species that includes the radioisotope of interest

Table B-2 continued (Original Fuel PIRT Items)

AREVA PIRT ID No.	PIRT Table No.	Item No.	Item	Description
VF-N-29	**New**		**Fuel Element: Oxidation/Corrosion**	**Oxidation or corrosion of the Fuel Element, and associated property changes, due to interactions with fission products, as well as air and water during certain accident scenarios.**
	4-2	8	Fuel element: Corrosion by coolant impurities	Corrosion of the fuel element outer surface by part per million level of gaseous impurities in the helium coolant
	4-5	5	Fuel Element: Chemical attack by water- Kinetics	Rate of reaction per unit surface area as a function of temperature and partial pressure of steam
	4-5	6	Fuel Element: Chemical attack by water – Catalysis	Modification of the reaction rate by fission products or impurities
	4-5	7	Fuel Element: Chemical attack by water - changes in chemical form of fission products	Changes in chemical form resulting from oxidizing or reducing fission products
	4-5	8	Fuel Element: Chemical attack by water - Changes in graphite properties	Changes in diffusivity, porosity, adsorptivity, etc.
	4-5	9	Fuel Element: Chemical attack by water - Holdup reversals	Release of graphite FP inventory
	4-5	10	Fuel Element: Chemical attack by water - Temperature distributions	Impact of graphite oxidation on temperature distribution through material
	4-6	5	Fuel Element: Chemical attack by air – Kinetics	Rate of reaction per unit surface area as a function of temperature and partial pressure of air
	4-6	6	Fuel Element: Chemical attack by air – Catalysis	Modification of the reaction rate by fission products or impurities
	4-6	7	Fuel Element: Chemical attack by air - Changes in chemical form of fission products	Changes in chemical form resulting from oxidizing or reducing fission products
	4-6	8	Fuel Element: Chemical attack by air - Changes in graphite properties	Changes in diffusivity, porosity, adsorptivity, etc.

Table B-2 continued (Original Fuel PIRT Items)

AREVA PIRT ID No.	PIRT Table No.	Item No.	Item	Description
	4-6	9	Fuel Element: Chemical attack by air - Holdup reversals	Release of graphite FP inventory
	4-6	10	Fuel Element: Chemical attack by air - Temperature distributions	Impact of graphite oxidation on temperature distribution through material