Document ID: TEV- 981
Revision ID: 0
Effective Date: 09/14/10

Technical Evaluation Study

Project No. 23843

An Analysis of the Effect of Reactor Outlet Temperature of a High Temperature Reactor on Electric Power Generation, Hydrogen Production, and Process Heat

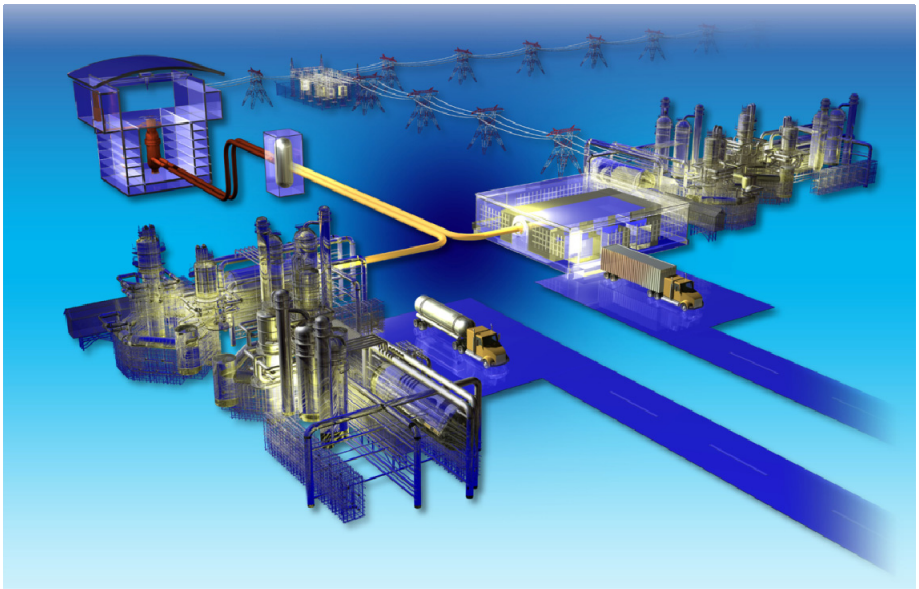

The INL is a U.S. Department of Energy National Laboratory operated by Battelle Energy Alliance.

The INL is a
U.S. Department of Energy
National Laboratory
operated by
Battelle Energy Alliance

Idaho National Laboratory

Idaho National Laboratory

AN ANALYSIS OF THE EFFECT OF REACTOR OUTLET TEMPERATURE OF A HIGH TEMPERATURE REACTOR ON ELECTRIC POWER GENERATION, HYDROGEN PRODUCTION, AND PROCESS HEAT	Identifier: TEV-981 Revision: 0 Effective Date: ~~09/13/10~~ PMM 09/14/10	TKA 9-16-10 148 Page: 1 of ~~149~~

NGNP Project	Technical Evaluation Study (TEV)	eCR Number: 583662

Signatures

Signature and Typed or Printed Name	Signature Code	Date (mm/dd/yyyy)	Organization/Discipline
M. G. McKellar	P	9/13/2010	NGNP Engineering Support
M. W. Patterson	C	9/13/2010	NGNP Engineering Support
P. M. Mills	~~A~~ C PMM 9/14/10	9/14/10	NGNP Engineering ~~Technical Manager~~ DIRECTOR (ACTING)

PMM 9/14/10

P For Preparer of the document.

A For Approval: This is for non-owner approvals that may be required as directed by a given program or project. This signature may not be applicable for all uses of this form.

C For documented review and concurrence.

Note: Applicable QLD: REC-000101

REVISION LOG

Rev.	Date	Affected Pages	Revision Description
0	09/14/10	All	Newly issued document.

EXECUTIVE SUMMARY

This technical evaluation (TEV) has been prepared as part of a larger study for the Next Generation Nuclear Plant (NGNP) Project involving the integration of high-temperature gas-cooled reactor (HTGR) technology with conventional industrial processes. This TEV addresses the effect of the reactor outlet temperature (ROT) of an HTGR on power conversion, on hydrogen production with high-temperature steam electrolysis (HTSE), and on process heat.

An HTGR can produce industrial process steam, high-temperature heat-transfer gases, and/or electricity. In conventional industrial processes, these products are generated by the combustion of fossil fuels such as coal and natural gas, resulting in significant emissions of greenhouse gases such as carbon dioxide. Heat or electricity produced in an HTGR could be used to supply process heat or electricity to conventional processes without generating any greenhouse gases. Combining an HTGR with the HTSE process also provides a source of hydrogen with little or no greenhouse gases. The hydrogen may be used in a variety of industrial processes including synthetic fuel production, fuel upgrading, or ammonia production.

For power generation, it was assumed that the power cycle efficiency is 66% of the Carnot efficiency. This assumption was made based on how well the curve lay within data from literature on power cycles. A net power conversion efficiency is calculated by accounting for the power of the primary loop circulator, resulting in a conversion efficiency that is less than 66% of Carnot. Table 1 shows the results of this analysis as a function of ROT.

Table 1. Power cycle efficiencies as a function of ROT

ROT °C	Power Cycle Efficiency	Net Power Conversion Efficiency
650	45.0%	43.2%
700	46.0%	44.3%
750	47.0%	45.2%
800	47.9%	46.1%
850	48.7%	46.8%
900	49.4%	47.5%
950	50.1%	48.2%

Table 2 presents the primary production of hydrogen production as a function of ROT using HTSE. For the analysis, a 600 MWth HTGR was assumed. A sweep gas is used in HTSE to remove the oxygen from the electrolysis cells. In this analysis, steam and air were used as sweep gases. The hydrogen production rate for HTSE increases linearly as the ROT increases for both types of sweep gases. At ROTs below 850°C, topping heat from natural gas is necessary to reach the electrolysis temperature of 800°C, therefore the total heat in is greater than 600 MWth.

HTSE with air sweep has slightly better hydrogen production than with steam sweep, however steam sweep produces a 99.9% pure oxygen stream.

Table 2. HTSE results as a function of ROT.

ROT °C	Steam Sweep Total Heat In (MWth)	Steam Sweep Hydrogen Flow (kg/s)	Air Sweep Total Heat In (MWth)	Air Sweep Hydrogen Flow (kg/s)
650	607.3	1.90	607.7	1.94
700	606.6	1.94	607.0	1.98
750	605.8	1.97	606.2	2.02
800	605.0	2.00	605.3	2.05
850	600.0	2.04	600.0	2.07
900	600.0	2.07	600.0	2.10
950	600.0	2.10	600.0	2.12

Process heat from a reactor needs to be transported by a gas to the industrial process. Two such gases were considered in this study: helium and steam. For this analysis, it was assumed that steam was delivered at 17 MPa and 540°C and helium was delivered at 7 MPa and at a variety of temperatures. The temperature of the gas returning from the industrial process and going to the HTGR must be within certain temperature ranges to maintain the correct reactor inlet temperature for a particular reactor outlet temperature. The returning gas may be below the reactor inlet temperature, but not above. The optimal return temperature produces the maximum process heat gas flow rate. Table 3 shows the optimal return temperatures and corresponding maximum mass flow rates for both steam and helium. For steam, the delivered pressure sets an optimal reactor outlet temperature based on the condensation temperature of the steam. ROTs greater than 769.7°C produce no additional advantage for the production of steam.

Table 3. Process heat as a function of ROT.

ROT °C	Steam Optimal Return Temperature °C	Steam Maximum Flow Rate (kg/s)	Helium Optimal Return Temperature °C	Helium Maximum Flow Rate (kg/s)
650	246.6	272.4	244.1	321.8
700	294.4	306.1	283.5	313.9
750	334.3	360.8	322.9	306.4
769.7	349.8	402.6		
800	349.8	402.9	362.3	299.3
850	349.8	403.4	401.7	292.5
900	349.8	403.9	441.2	286.0
950	349.8	404.3	480.6	279.7

CONTENTS

EXECUTIVE SUMMARY 5

1. INTRODUCTION 9

2. REACTOR INLET TEMPERATURE 10

   2.1 Introduction 10

   2.2 Method of calculating the reactor inlet temperature 10

   2.3 Mass-flow rate of helium 12

3. POWER CYCLE THERMAL EFFICIENCY AS A FUNCTION OF THE REACTOR OUTLET TEMPERATURE 14

   3.1 Introduction 14

   3.2 Power cycle process model 16

   3.3 Conclusions and recommendations 18

4. HIGH TEMPERATURE STEAM ELECTROLYSIS AS A FUNCTION OF THE REACTOR OUTLET TEMPERATURE 18

   4.1 Process Models 19

   4.2 Results 20

   4.3 Conclusions and recommendations 24

5. PROCESS HEAT 25

   5.1 Introduction 25

   5.2 Process Model 25

   5.1 Results 27

      5.1.1 Steam case 27
      5.1.2 Helium case 28
   5.2 Conclusions and recommendations 30

6. REFERENCES 32

7. APPENDIXES 33

1. INTRODUCTION

This technical evaluation (TEV) has been prepared as part of a study for the Next Generation Nuclear Plant (NGNP) Project to evaluate integration of high-temperature gas-cooled reactor (HTGR) technology with conventional chemical processes. The NGNP Project is being conducted under U.S. Department of Energy (DOE) direction to meet a national strategic need identified in the *National Energy Policy* to promote reliance on safe, clean, economical nuclear energy and to establish a greenhouse-gas-free technology for the production of hydrogen. The NGNP represents an integration of high-temperature reactor technology with advanced hydrogen, electricity, and process heat production capabilities, thereby meeting the mission need identified by DOE. The strategic goal of the NGNP Project is to broaden the environmental and economic benefits of nuclear energy in the U.S. economy by demonstrating its applicability to market sectors not being served by light water reactors.

An HTGR produces steam, high-temperature helium, or electricity. In conventional processes, these products are generated by the combustion of fossil fuels such as coal and natural gas, resulting in significant emissions of greenhouse gases such as carbon dioxide. Heat or electricity produced in an HTGR could be used to supply process heat or electricity to conventional processes without generating any greenhouse gases. The use of an HTGR to supply process heat or electricity to conventional processes is referred to as an HTGR-integrated process. This report describes how the reactor outlet temperature (ROT) affects HTGR-generated electricity, hydrogen and heat.

The purpose of this TEV is to present the process modeling results of the effects of the ROT on producing electricity, hydrogen from high-temperature steam electrolysis (HTSE), and heat using an HTGR. These results are used in other process models developed under the NGNP program where HTGR-generated electricity, hydrogen or heat may be integrated with industrial processes.

The Advanced Process and Decision Systems Department at Idaho National Laboratory (INL) has spent several years developing detailed process simulations of chemical and thermodynamic processes. The processes included HTSE combined with a variety of nuclear reactors. These simulations have been developed using “HYSYS.Plant” and ASPEN PLUS—state-of-the-art, steady-state, thermodynamic, and chemical process simulators developed by Hyprotech and ASPEN. This study makes extensive use of these models and the modeling capability at INL to evaluate the integration of HTGR technology with potential hydrogen production technologies.

This TEV assumes familiarity with “HYSYS.Plant” and APSEN PLUS software, so a detailed explanation of the software capabilities, thermodynamic packages, unit operation models, and solver routines is beyond the scope of this TEV. Also assumed is a familiarity with thermodynamic, heat exchange, and heat recuperation systems; hence, a thorough explanation of these technologies is also considered to be beyond the scope of this TEV.

2. REACTOR INLET TEMPERATURE

2.1 Introduction

To evaluate the effect of the ROT on power generation, hydrogen production, and process heat generation, the reactor inlet temperature (RIT) must be known. Given the reactor's inlet and outlet core temperatures, the mass flow of helium through the core can be calculated. As will be shown in this report, the RIT determines the maximum flow rate of the process heat loop. For this study a number of papers and books were referenced to determine the RIT as a function of the ROT.

2.2 Method of calculating the reactor inlet temperature

Table 4 shows data from the literature of the RIT as a function of the ROT with corresponding references. Figure 1 is a plot of the data.

Table 4. Referenced reactor inlet and outlet temperature data.

Reactor Outlet Temperature °C	Reactor Inlet Temperature °C	Reference
538	221	1
566	266	1
690	400	1
693	318	1
723	320	1
724	273	1
725	345	1
750	250	1
750	275	1
750	298	1
750	310	1
750	322	6
750	325	5
750	350	1
775	405	1
850	200	1
850	438	1
850	490	2
850	494	1
900	500	7, 9
900	540	3, 4
950	490	7
950	500	1
950	590	3, 4, 8, 10
1320	870	1

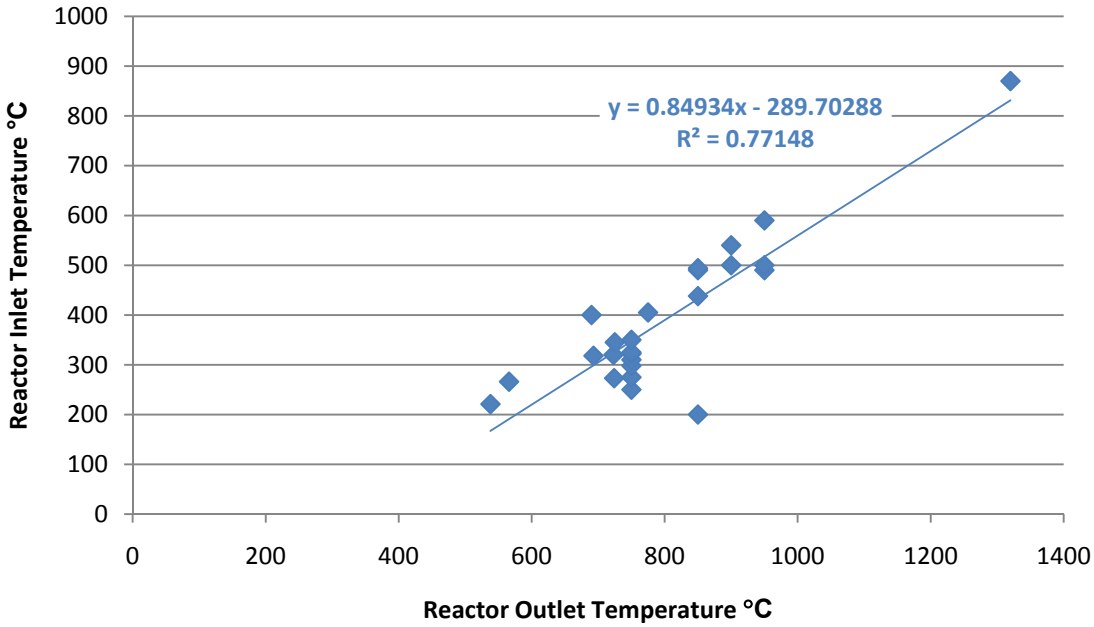

Figure 1. RIT as a function of the ROT temperature.

A least-squares linear fit was applied to the data, and the line is shown in Figure 1. The curve fit has a linear regression value of 77%. Multiple data points at 750°C and 850°C have shifted the curve towards those lower reactor inlet temperature data points. To reduce the effect of those multiple data points, the average reactor inlet temperature was calculated for every reactor outlet temperature that had multiple data and a linear fit was applied, see Figure 2. The linear curve is given below.

$$\mathrm{RIT} = 0.82050 * \mathrm{ROT} - 242.68 \tag{1}$$

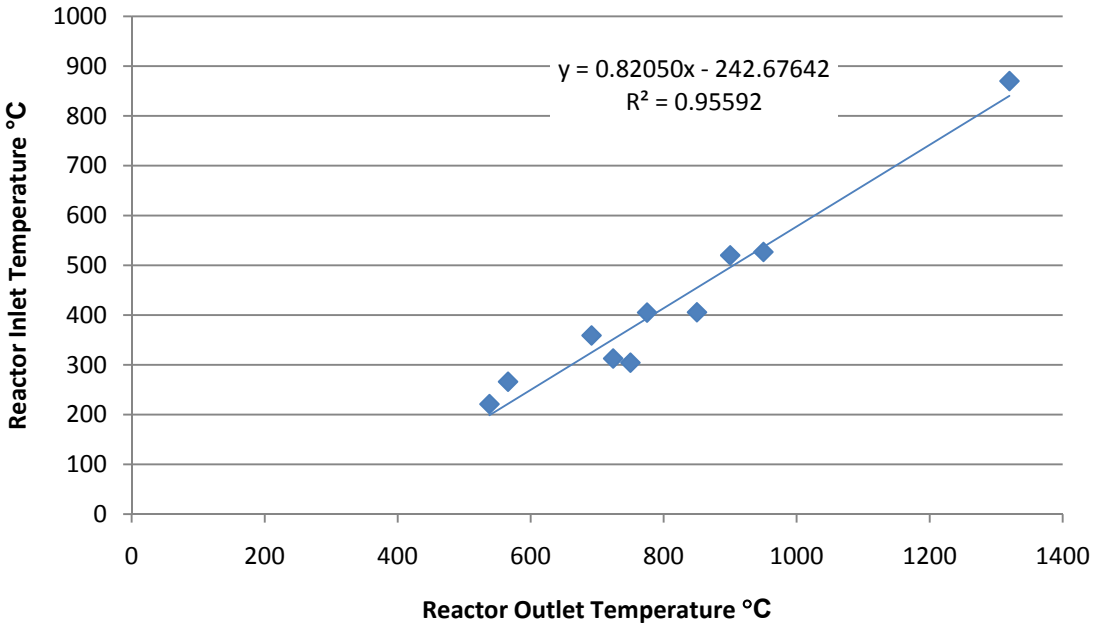

Figure 2. RIT as a function of the ROT with averaged data.

2.3 Mass-flow rate of helium

A simple process model was developed to determine the mass-flow rate of helium through the reactor based on the ROT and the corresponding RIT, as seen in Figure 3. A 600-MWth high-temperature reactor was assumed for the model. The primary loop is helium at 7 MPa. It is assumed that the pressure drop across the reactor is 2% of the nominal pressure of the loop. The pressure drop is based on preliminary designs of reactor primary and secondary helium loops. Pressure drops in these designs vary from 1.24% to 2.5% of the nominal pressure [5, 6].

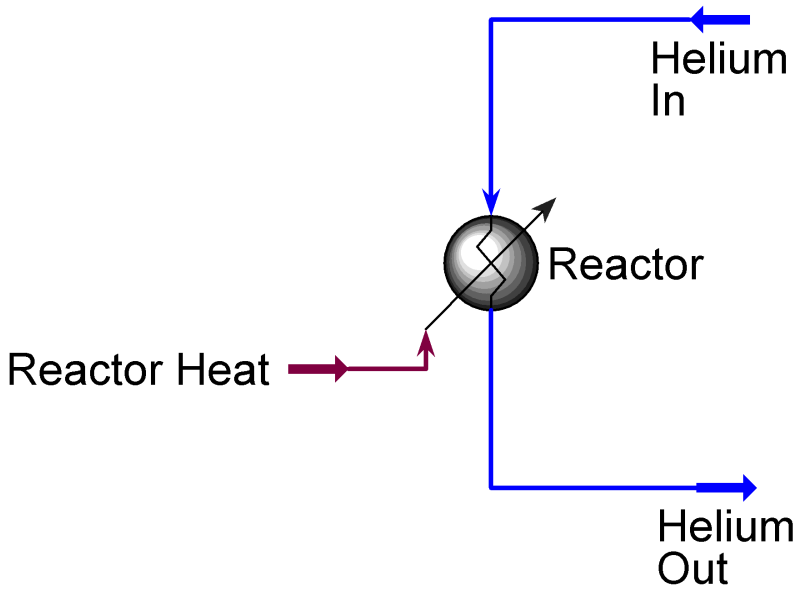

Figure 3. Process model of reactor.

Figure 4 is a plot of the ROT, the RIT calculated from *Equation (1)*, and the flow rate of helium through the reactor calculated from the process model. The following can be concluded:

- As the ROT increases, the RIT increases, but not as rapidly. For every degree increase in the outlet temperature, the inlet temperature increases only 0.82°C.
- The temperature difference between the outlet and inlet temperature increases as the outlet temperature increases, which causes the helium mass-flow rate to decrease.
- The primary helium flow rate is influenced by the slope and intercept of *Equation (1)*. The slope affects the rate of change in the mass flow rate as a function of temperature and the intercept affects the average magnitude of the mass flow rate.

The approach in this TEV to calculate the RIT and primary helium flow is a statistical approach based on literature. A recommended approach is to select a reactor core type and look at the nuclear physics and heat transfer within the core as a function of the reactor outlet temperature.

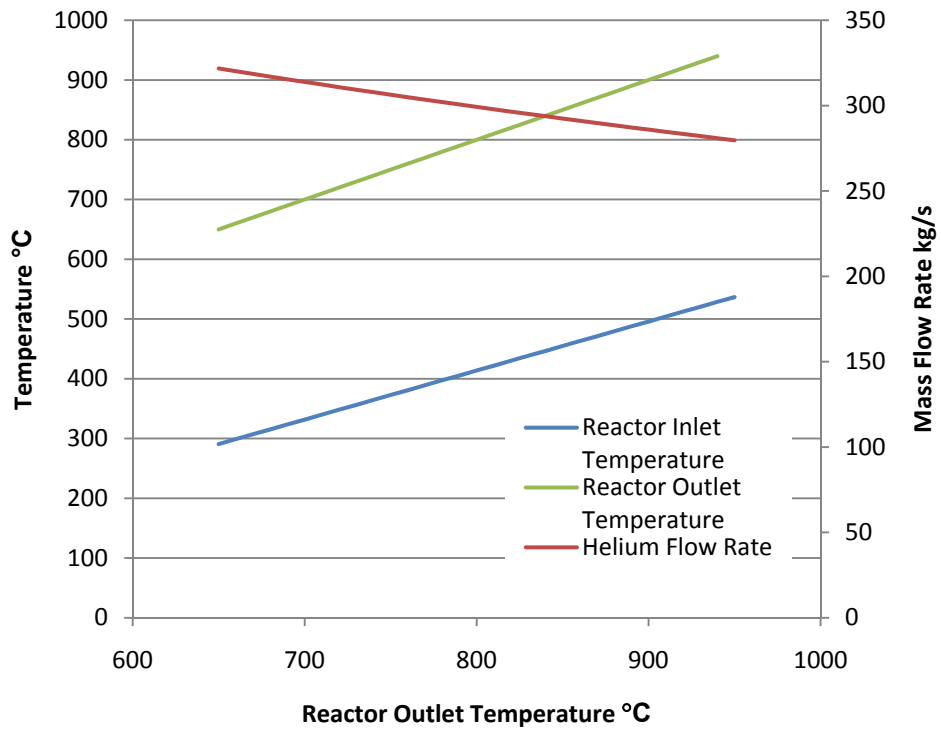

Figure 4. RIT and helium flow rate as a function of ROT.

3. POWER CYCLE THERMAL EFFICIENCY AS A FUNCTION OF THE REACTOR OUTLET TEMPERATURE

3.1 Introduction

One of the functions of an HTGR is to produce electricity. A power cycle generally consists of four stages: (1) heat addition, (2) power generation through expansion, (3) heat rejection, and (4) compression. When the working fluid of the power cycle directly cools the core of the nuclear plant, it is called a direct cycle. If the working fluid of the power cycle and the primary cooling loop of the reactor core are separate, it is called an indirect cycle. In an indirect cycle, heat from the core is provided to the power cycle by means of a steam generator or intermediate heat exchanger (IHX). Direct power cycles can provide more electrical power from heat generated by the core, but the power cycle components are contaminated with radioactive materials.

Optimal thermodynamic performance of a cycle is measured by its thermal efficiency. The thermal efficiency is defined as the electrical power output divided by the heat input, or:

$$\eta_{th} = \frac{\dot{W}}{\dot{Q}_H} \tag{2}$$

A power cycle is thus based on the thermodynamic concept of a heat engine. Power may be produced from a heat engine that is placed between a high-temperature source and a low-temperature sink, as shown in Figure 5. The work of the heat engine is defined as:

$$\dot{W} = \dot{Q}_H - \dot{Q}_L \tag{3}$$

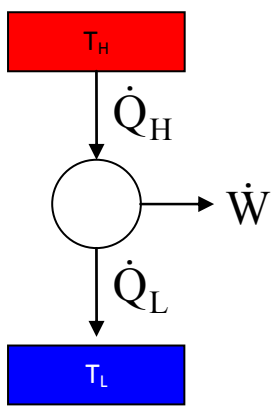

Figure 5. Heat engine between hot source and cold.

Heat is transferred from the high-temperature source to the heat engine, and heat is rejected from the heat engine to the low-temperature sink. The thermal efficiency of a heat engine can be shown as:

$$\eta_{th} = \frac{\dot{Q}_H - \dot{Q}_L}{\dot{Q}_H} \tag{4}$$

In real situations, a temperature difference is needed to transfer the heat from the source to the heat engine and from the heat engine to the heat sink. However, if those differences were made to go to zero, an ideal or maximum efficiency could be determined. The maximum efficiency is called the Carnot efficiency and is a function of source and sink temperatures only, as in:

$$\eta_{Carnot} = \frac{T_H - T_L}{T_H} \tag{5}$$

3.2 Power cycle process model

As the ROT increases, the power cycle efficiency should increase as well. However, power cycles used at lower ROTs do not perform well at higher reactor temperatures. A Rankine steam cycle operates well at ROTs of 600°C, but a Brayton cycle is ideal for ROTs of 900–950°C.

Figure 6 shows a plot of the power cycles from literature as a function of the ROT [1, 5, 11, 12, 13, 14]. The types of power cycles represented by the markers are Rankine steam cycles, combined cycles, Brayton gas cycles, and super-critical carbon dioxide cycles. The markers represent direct and indirect versions of the cycles. A power cycle at 66% of the Carnot efficiency is also plotted and compared to the data.

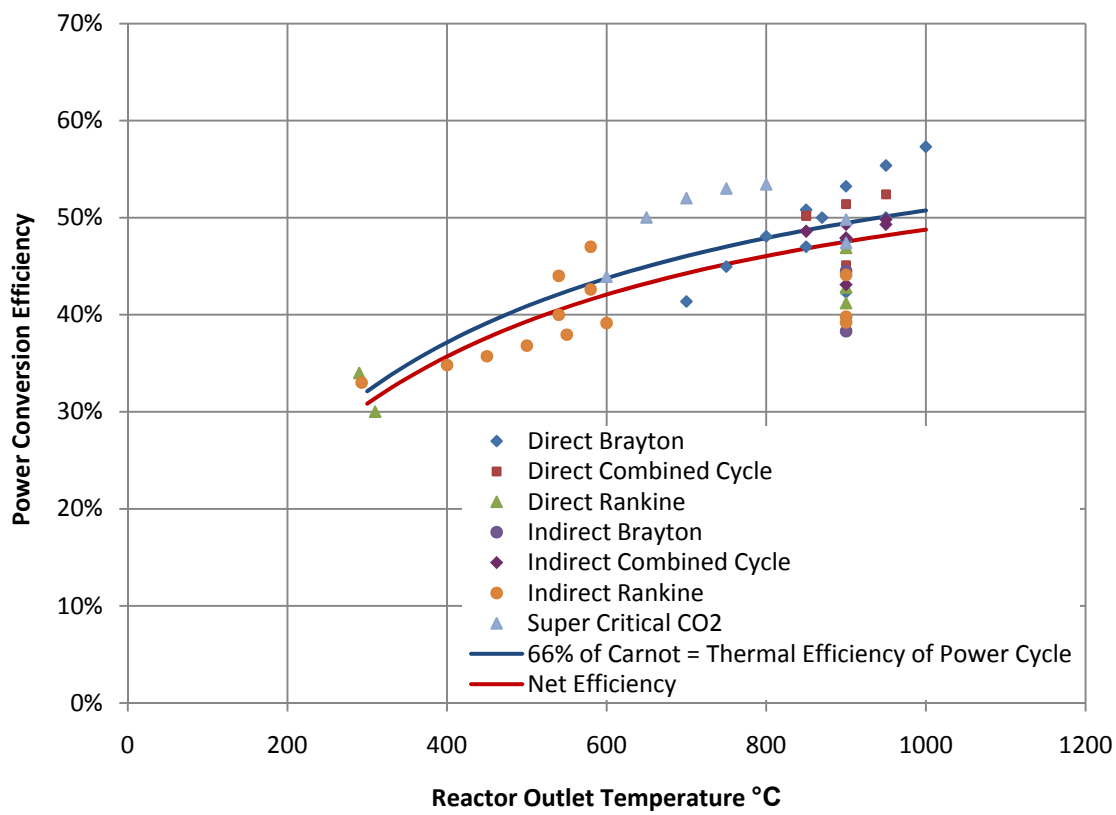

Figure 6. The net efficiency and 66% of Carnot conversion efficiency as a function of the ROT compared with power cycles within literature.

A power conversion model was developed using the "HYSYS.Plant" process modeling software (see Figure 7). A 600-MWth helium-cooled reactor was assumed and *Equation (1)* was used to calculate the RIT. The reactor was modeled using a heater. The outlet of the heater was set to the desired ROT. The pressure in the loop was assumed to be 7 MPa. The outlet stream enters a sub flow sheet, which consists of the inlet and outlet streams and a cooler block, labeled HX (see Figure 8). An embedded spreadsheet calculates the Carnot efficiency from the inlet temperature and the assumed ambient temperature of 21.1°C. The power cycle efficiency is calculated as 66% of the Carnot efficiency. The heat of HX is calculated and the value of the Electric Power Out power stream is calculated by multiplying the heat of the HX by the power cycle efficiency within the embedded spreadsheet. A net efficiency is also calculated by dividing the difference of values between the Electric Power Out power stream and the circulator power, Circ1 Pwr, by the reactor heat. Therefore, as shown in Figure 6, the net efficiency is less than 66% of Carnot. The necessary power cycle cooling, Ql, is also calculated using *Equation (4)*. Figure 6 shows that as the ROT increases, so do the power cycle efficiencies. However, at higher temperatures, the efficiency begins to level out. The 66% of Carnot value was selected by fitting the net efficiency with the published data using the solver function in Excel.

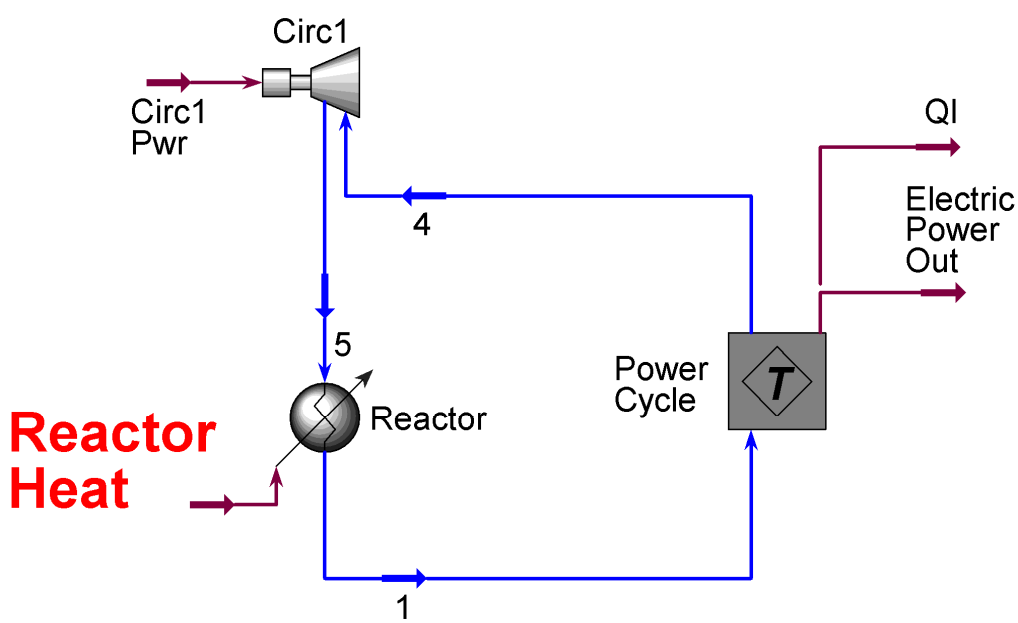

Figure 7. Primary loop process model.

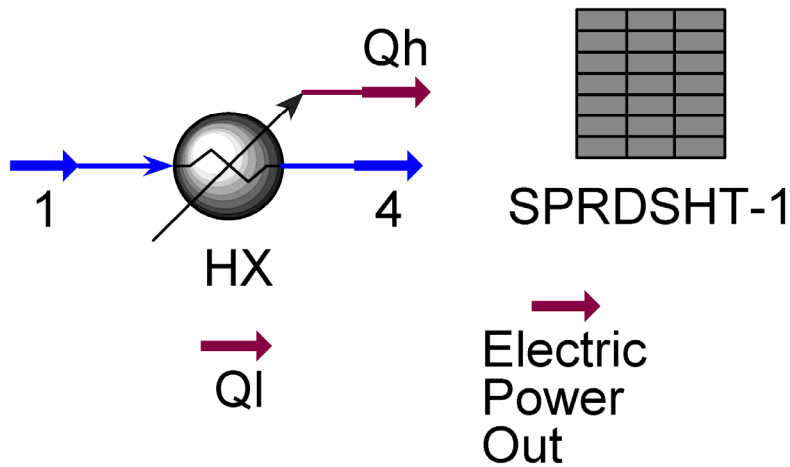

Figure 8. Power cycle sub flow sheet.

3.3 Conclusions and recommendations

The following conclusions may be made:

- The assumption of 66% of the Carnot efficiency is a fair assumption for a power cycle. This assumption over predicts the power conversion efficiency at lower ROTs and under predicts at higher ROTs.
- Actual power cycles need to be selected based on the ROT which may require the research and development of power cycles to fit the ROT.
- As the ROT increases, the power cycle efficiency increases resulting in more electric power for a given reactor heat.

It is recommended that power cycles be analyzed over ROTs to determine ROT ranges for the cycles.

4. HIGH TEMPERATURE STEAM ELECTROLYSIS AS A FUNCTION OF THE REACTOR OUTLET TEMPERATURE

The purpose of this section is to determine the effect of the reactor outlet temperature and the sweep gas on the production of hydrogen using high temperature steam electrolysis. Two types of HTSE systems were modeled: a steam sweep model and an air sweep model. The sweep gas in HTSE is used to remove oxygen generated from the solid oxide fuel cells. A variety of gases could be used, but for this study, steam and air were considered. If pure oxygen is desired as a product, the steam sweep gas may be

condensed and removed from the oxygen, but, as presented in the results section, it tends to limit heat exchangers due to phase changes on both sides. It will be shown that as the ROT increases, hydrogen production increases and that air sweep produces more hydrogen than steam sweep at a given ROT.

4.1 Process Models

Figure 9 shows a block diagram model of the HTSE process with sweep gas and topping heat. The reactor supplies heat to generate power and to raise the temperature of the water used for electrolysis and for the sweep gas. Recuperation is used both at high temperatures and low temperatures to recover the heat from the gases exiting the electrolysis process. At lower reactor temperatures, additional heat called topping heat is required to obtain an electrolysis temperature of 800°C. This heat is obtained from the combustion of the natural gas. The combustion products, after raising the temperature of the steam and sweep gas to electrolysis conditions, are still hot and are therefore used to generate additional power via a small power cycle.

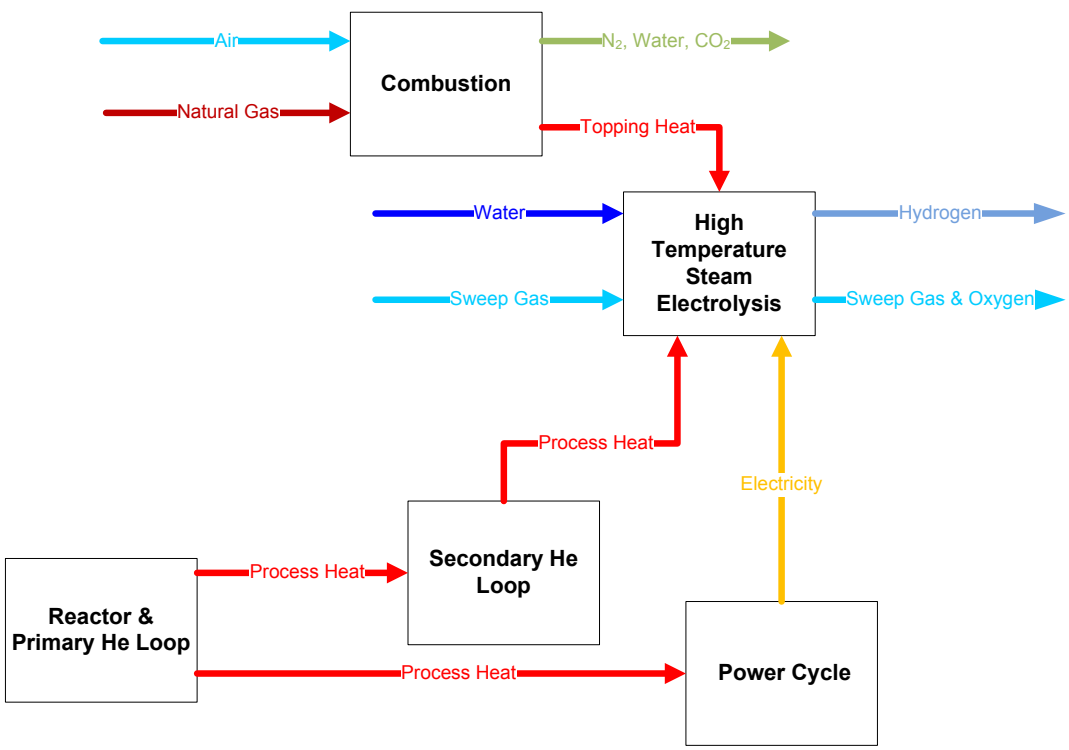

Figure 9. Block diagram of HTSE with sweep gas and topping heat.

When the steam sweep is used, the water on the sweep side may be condensed and recycled. The resulting oxygen product is 99.9% pure. Also pumps are used on the sweep side to cycle the water

If an air sweep is used, compressors bring the sweep gas to electrolysis pressures. Since the oxygen is difficult to separate in this process, the sweep gas eventually passes through a turbine to generate power. The air sweep process is a once-through process.

For both models, at reactor temperatures of 850°C or above, neither the natural gas heat exchangers nor the high-temperature recuperators are necessary.

The following assumptions were made for the process models:

- The power cycle is based on the 66% of the Carnot cycle described above
- The heat exchangers in the process models have minimum approach temperatures of 25°C
- The circulators have adiabatic efficiencies of 80%
- All other compressors and pumps have adiabatic efficiencies of 75%
- The turbines have efficiencies of 80%.
- Of the steam entering the electrolysis process, 66% is converted to hydrogen and oxygen
- Pressure drops in heat exchangers are 2% of the nominal pressure.

4.2 Results

The hydrogen production efficiency is a means by which the thermodynamic performance of HTSE may be measured. The hydrogen production efficiency is the higher heating value of the hydrogen produced divided by the total thermal input into the process. For the process models in this study, the total thermal input of the process is the sum of the reactor heat and the higher heating value of the natural gas used for topping heat. Figure 10 is a plot that compares the steam

sweep's hydrogen production efficiency against the air sweep's efficiency.

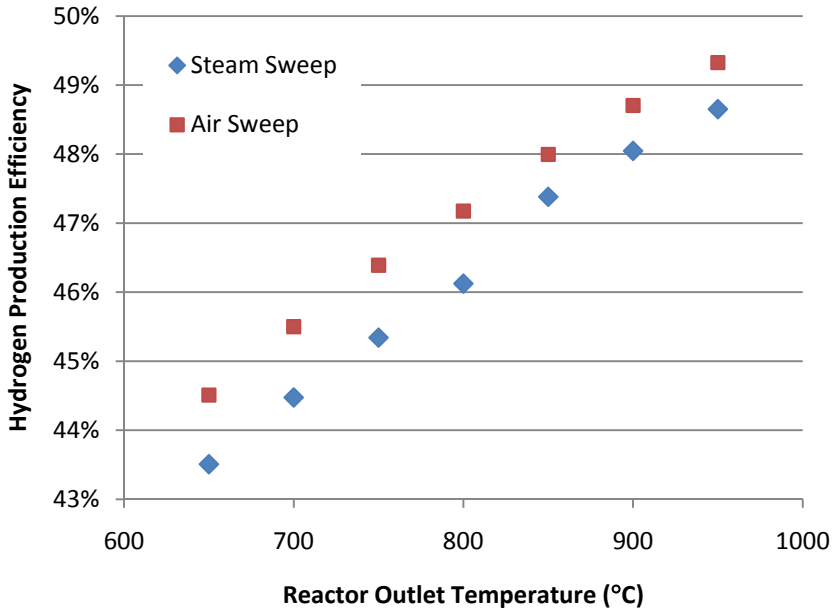

Figure 10. Hydrogen production efficiency as a function of the ROT.

For both cases, as the ROT increases, so does the hydrogen production efficiency. At higher ROTs, the power cycle efficiency increases. Since HTSE depends on electric power, the hydrogen production increases as the power cycle efficiency increases. The air sweep tends to produce more hydrogen than the steam sweep because the recuperating heat exchangers using steam sweep tend to constrain or pinch due to water condensation on one side and boiling water on the other.

Figure 11 shows the mass flow of natural gas used and the mass flow of carbon dioxide produced, normalized by the mass flow of hydrogen produced. As the reactor temperature increases, the natural gas and carbon dioxide flows decrease until an ROT of 850°C is achieved, at which point, no natural gas is needed and therefore no carbon dioxide is produced. The air sweep cases require slightly more natural gas and produce slightly more carbon dioxide. Figure 12 shows the percent that natural gas makes to the total thermal input to the HTSE process. Less than 2% of the total heat needed comes from the natural gas. The remainder of the heat comes from the reactor. Of the heat from the reactor, 90–93% of the heat is used to make electricity.

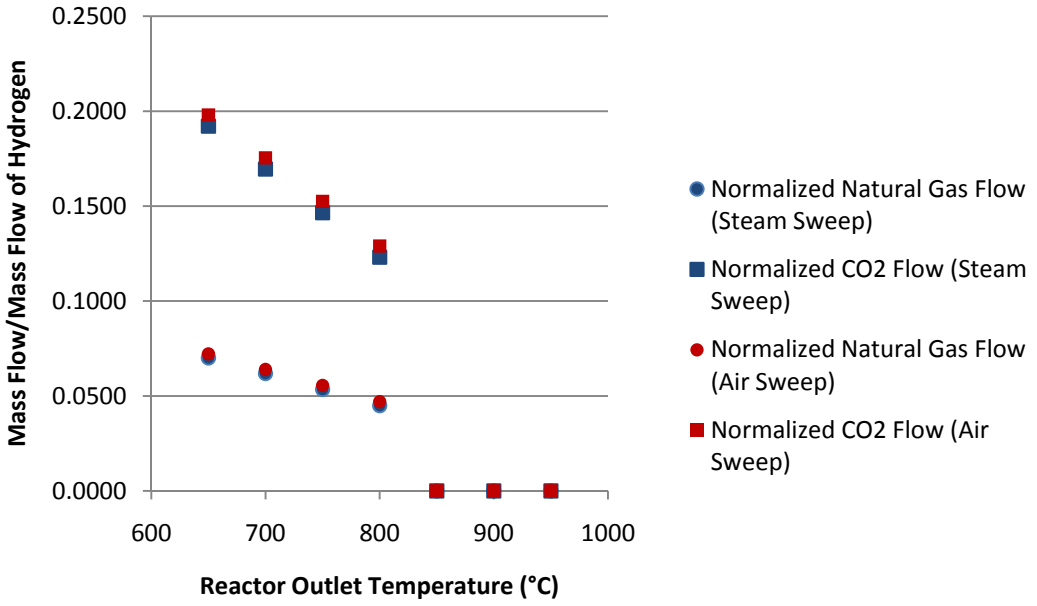

Figure 11. Natural gas and carbon dioxide flow normalized to hydrogen flow.

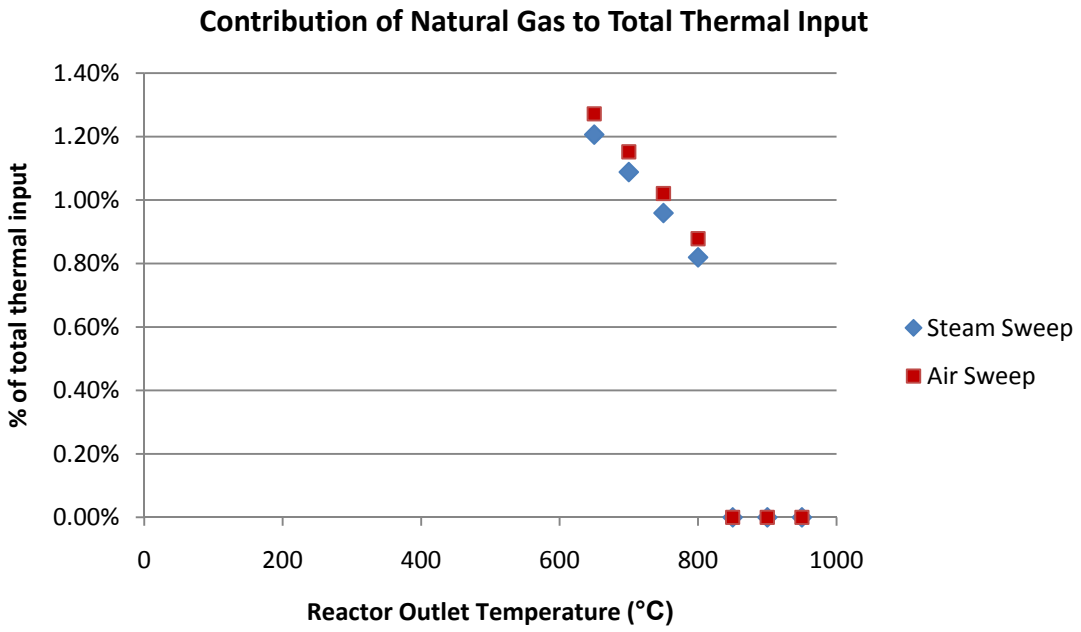

Figure 12. Percentage of natural gas to total heat into the HTSE process.

The thermal heat input and the hydrogen product flow rate for air sweep and steam sweep as a function of ROT are shown in Figures 13 and 14. The total heat input is the sum of the reactor heat and the thermal value of the natural gas used for topping heat. As can be seen in both figures, the heat from the natural gas is only used for ROTs of 800°C or below. The reactor heat is constant at 600 MWth. Therefore the 650°C to 800°C cases have a total heat input that is slightly greater than 600 MWth. The heat from the natural gas is very small. Hydrogen production for the steam sweep cases varies linearly from 1.90 to 2.10 kg/s as the ROT varies from 650 to 950°C. The hydrogen production for the air sweep cases vary from 1.94 to 2.12 kg/s over the same ROT range.

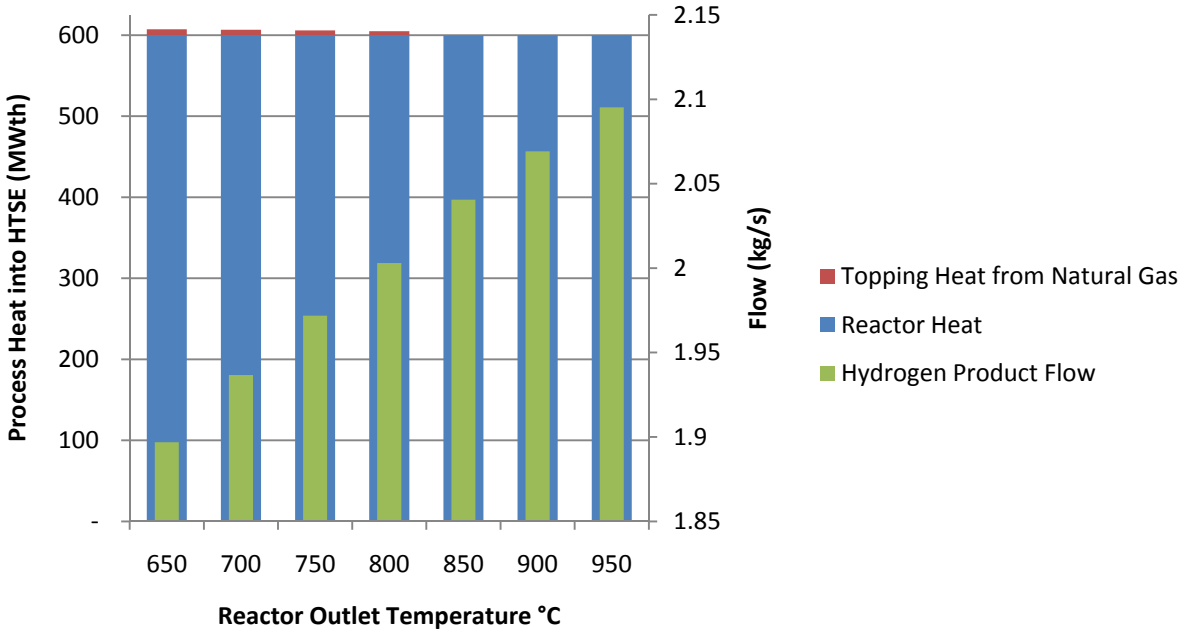

Figure 13. Thermal heat into HTSE process and hydrogen product flow as a function of ROT for steam sweep.

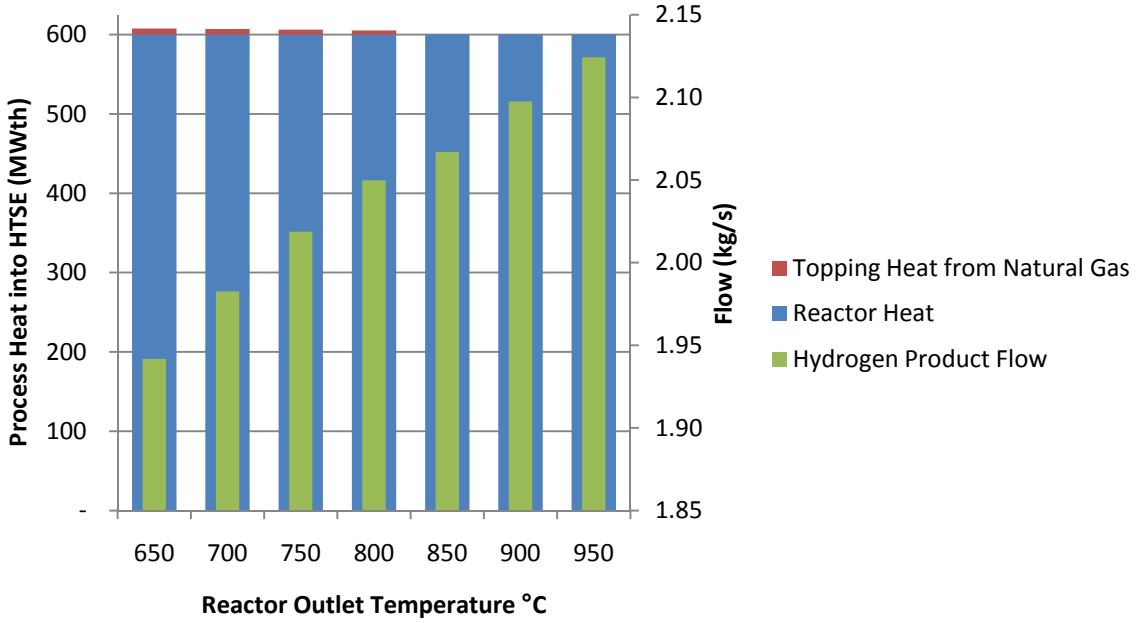

Figure 14. Thermal heat into HTSE process and hydrogen product flow as a function of ROT for air sweep.

4.3 Conclusions and recommendations

The following conclusions may be made for hydrogen production via HTSE as a function of ROT:

- In general, higher reactor temperatures increase the hydrogen production efficiency due to a close dependency of HTSE to the power cycle efficiency.
- The steam sweep produces slightly less hydrogen than the steam sweep because of opposing phase changes of steam within recuperating heat exchangers.
- At temperatures above 850°C, no natural gas is needed to provide topping heat and therefore no carbon dioxide is produced.
- At lower temperatures, the amount of natural gas used and carbon dioxide produced is relatively small compared to the total heat needed for the process.

- Hydrogen production rates varies from 1.90 to 2.12 kg/s as a function of the ROT and sweep gas.

It is recommended that:

- Actual power cycles are developed and used in the HTSE process models to determine hydrogen production as a function of ROT.
- Other topping heat conditions like electric heating are analyzed to determine the effects on hydrogen production.

5. PROCESS HEAT

5.1 Introduction

For this analysis, it is assumed that process heat is supplied in two forms: steam and helium. The process heat may be used for a variety of industrial processes. The purpose of this analysis is to determine the effect of the ROT on the heat. For this analysis it is assumed that the process return temperature must not adversely affect the reactor inlet temperature. With this assumption, the RIT becomes a boundary condition which limits the maximum process return temperature. If the process return temperature is below this boundary condition, the RIT is not affected. If the process return temperature is above this condition, heat must either be rejected or the heat used in some other process like power generation.

In general, the process steam mass flow rate is constant regardless of ROT for a given process return temperature. The process heat mass flow rate of the helium decreases as the ROT increases for a given process return temperature. Maximum process heat flow conditions are achieved for both cases when the optimal process return temperature is obtained.

5.2 Process Model

Two relatively simple process models were developed to analyze this problem: one for steam and one for helium process heat. Figures 15 and 16 show the process models. The following assumptions were used for the analysis:

- Heat exchangers have minimum approach temperatures of 25°C
- The circulators have adiabatic efficiencies of 80%
- The pumps have adiabatic efficiencies of 75%

- 2% nominal pressure drops occur within the heat exchangers and heaters
- A 600-MWth reactor supplies the heat in the primary loop
- The RIT and primary loop flow rate are determined as outlined in the RIT section of this report.

For both models, two loops are used: a primary reactor loop and a secondary process heat loop. For the steam case, the steam is condensed and a pump is used to circulate the water into the steam generator. For the helium case, a circulator is used on both the primary and secondary loops. It is assumed for the steam case that steam is produced at 540°C and 17 MPa. The helium is produced at 25°C below the ROT (due to the minimum approach within the IHX) and 7 MPa.

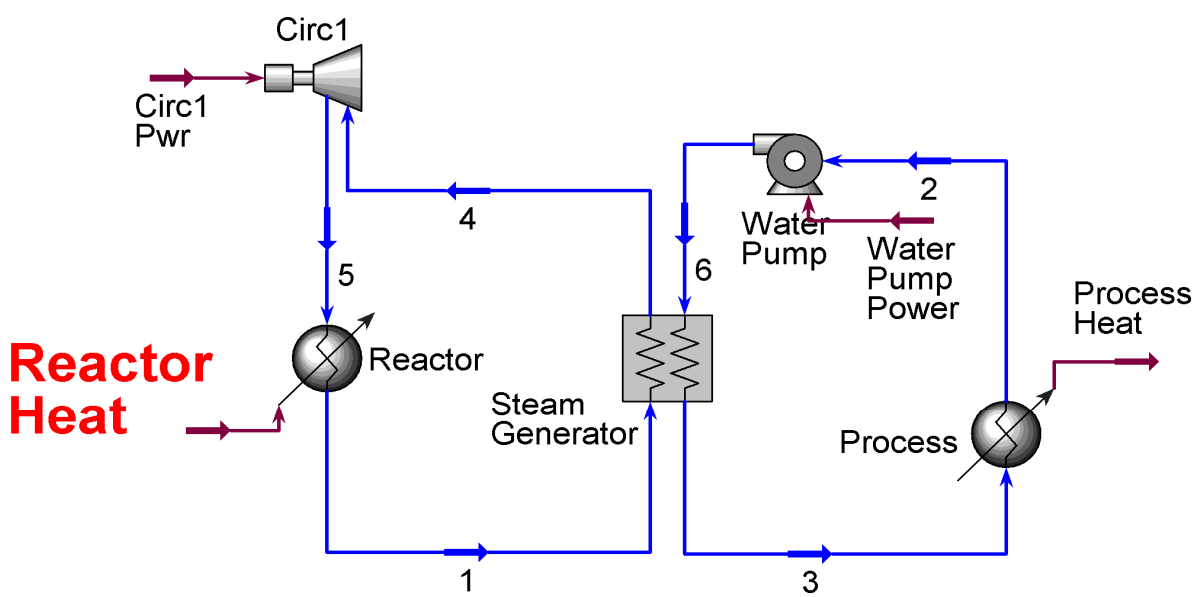

Figure 15. Steam process heat model.

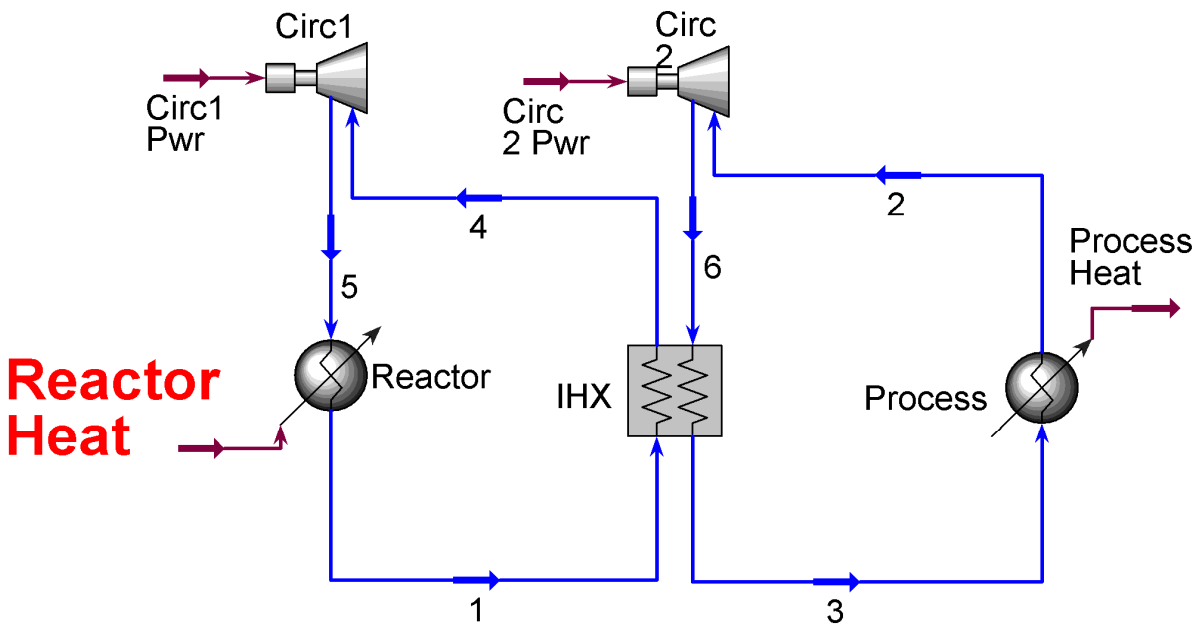

Figure 16. Helium process heat model.

5.1 Results

5.1.1 Steam case

To analyze the steam case, a parametric study was made in which both the ROT and the process heat return temperature were varied. The results of this study are plotted in Figure 17.

The maximum process return temperature is determined by one of two conditions. For ROT of 770°C and below, the maximum process return temperature is set by the minimum approach temperature of the steam generator. Above a ROT of 770°C, the process return temperature is set at the saturated liquid condition to ensure pumping. At the ROT of 770°C, both conditions are met.

A corresponding maximum steam mass flow rate is plotted based on the maximum process return temperature. At ROTs less than 770°C, the maximum flow rate increases as the ROT increases because the maximum process return temperature increases. At ROTs greater than 770°C, the maximum steam flow rate becomes constant because the process return temperature is set at the saturated liquid condition at a

pressure of 17 MPa and the inlet temperature is set at 540°C resulting in a constant difference across the steam generator on the steam side.

Three parametric lines are plotted based on constant process return temperature of 100, 200 and 300°C. Since the inlet temperature is constant at 540°C, the corresponding process steam mass flows are constant regardless of ROT. However the ROT must be greater than 707°C at a process return temperature of 300°C or the RIT will be adversely affected because the return temperature is too high.

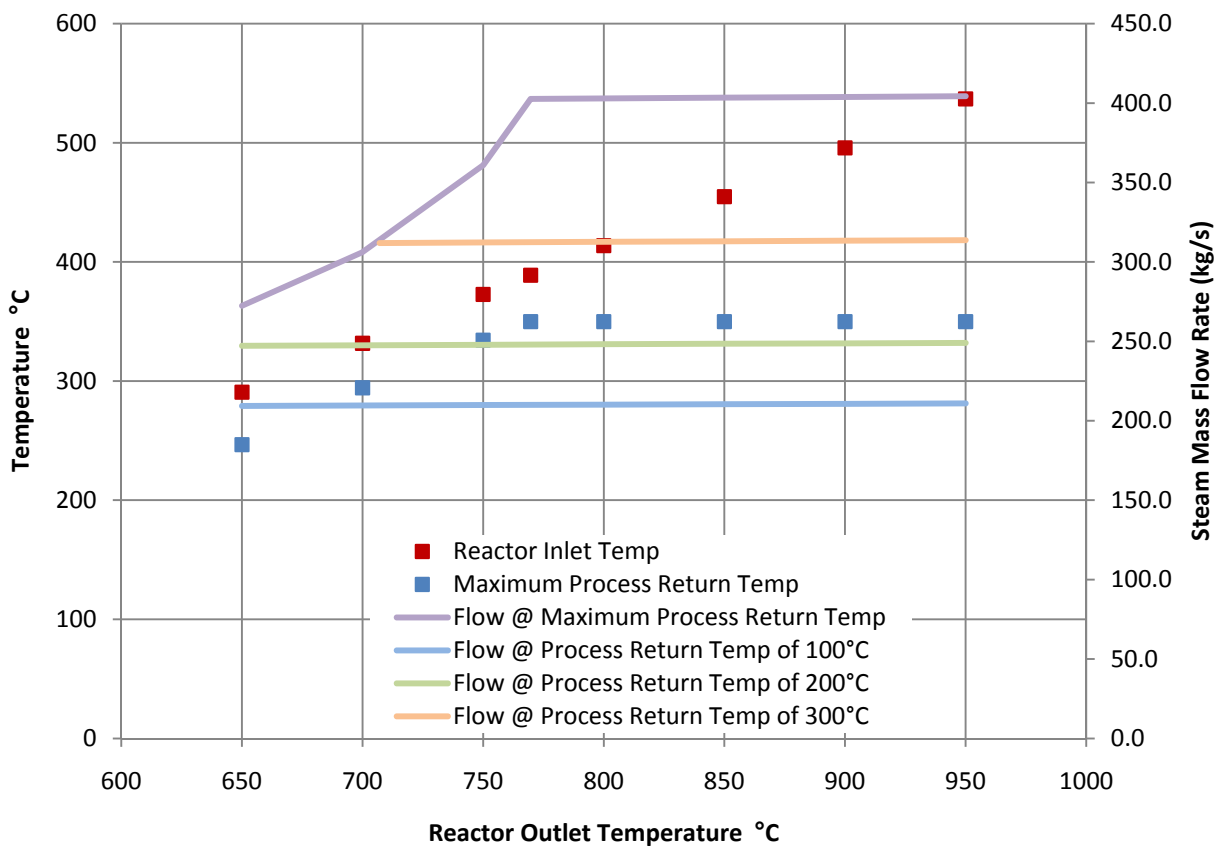

Figure 17. Process steam results for 600-MWth reactor.

5.1.2 Helium case

As with the steam case, the helium case was analyzed by varying both the ROT and the process return temperatures, see Figure 18. At the maximum process return temperature conditions, the minimum approach

across the intermediate heat exchanger, IHX, is constant for the entire heat exchanger. The maximum process return temperature is affected most by the reactor inlet temperature and therefore follows closely the same trend as the RIT. The circulator power on the secondary helium side however causes the temperature difference between the RIT and the maximum process return temperature to increase slightly as ROT increases.

The maximum process mass flow rate is equal to the primary helium loop due to a fairly constant helium specific heat across large temperature ranges and a constant temperature difference across the IHX.

Constant process return conditions were set at 100, 200, 300 and 400°C. As the ROT increases at a given process return temperature, the process mass flow decreases. This is due to an increasing temperature difference between the increasing process supply temperature and the constant return temperature. At a given ROT, the mass flow rate increases as the process return temperature increases because the temperature difference decreases.

The maximum process return conditions limit the mass flow rate and process return temperatures. For instance, a process return temperature of 400°C can only be achieved at ROTs of 850°C or greater without adversely affecting the RIT.

Both the process steam and helium plots show some important concepts that need to be considered when integrating processes with HTGRs. If the reactor inlet temperature must be maintained, the process return temperature may not exceed the maximum return temperature. The maximum return temperature sets the maximum mass flow rate for the process heat. If the return temperature is greater than the maximum allowable temperature, heat must be rejected or used to bring the return temperature down. If the return temperature is lower than the maximum allowable return temperature, then there is no effect on the reactor inlet temperature, however, the process mass flow rate decreases. The effect this last statement has an important consequence on the integration of heat between the process and the reactor. As an example, if a process needs 900°C process heat at a flow rate of 200 kg/s or more and the helium return temperature is 400°C which is just below the maximum process return temperature of 441°C, one could use this helium stream in another lower temperature process and drop the return temperature further, for instance to 200°C. However that would cause the helium

flow rate to decrease from 260 kg/s to 156 kg/s for a single 600 MWt HTGR and would ultimately result in more HTGRs to ensure the correct high temperature process heat at 900°C.

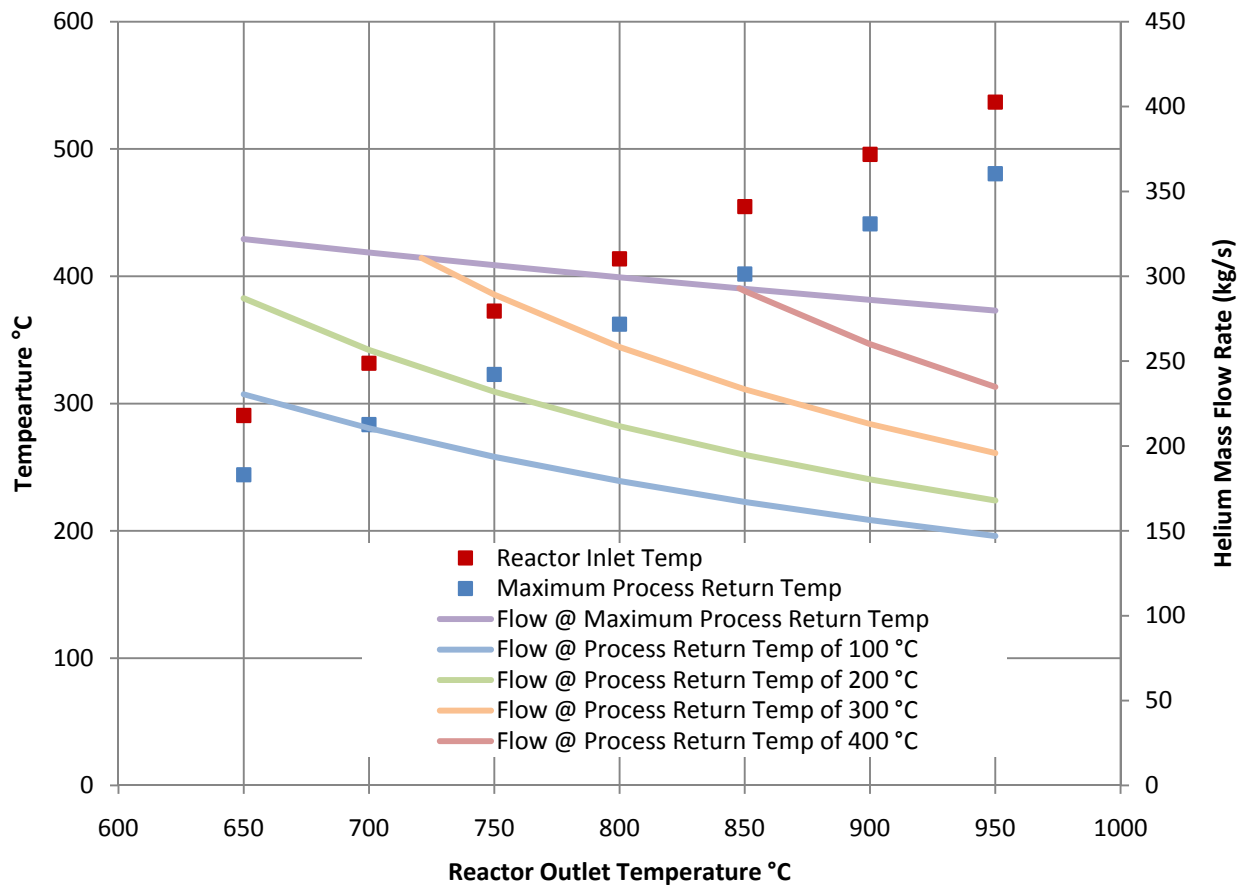

Figure 18. Helium process heat results: Reactor inlet temperature and Maximum process return temperature as a function of ROT; and the secondary loop helium flow rate at various process return temperatures as a function of ROT.

5.2 Conclusions and recommendations

The following conclusions may be made for process heat.

In general:

- Maximum process flow rates are obtained at maximum return temperatures.
- Higher process return temperatures and flow rates are limited to higher ROTs and are bound at lower ROTs by the maximum conditions.
- Maximum process flow rates and process return temperatures result in the least number of HTGRs needed for heat integration.

For steam heat:

- For steam generation at 17 MPa, ROTs greater than 770°C offer no advantages.
- Maximum process return temperatures and mass flow rates are set by one of two conditions:
    - At conditions below the saturation temperature of the process steam, the process return temperature is strongly affected by the RIT.
    - At conditions above the saturation temperature of the process steam, the process return temperature is at the saturated liquid condition
- At a given process return temperature, the steam mass flow rate is constant.

For helium:

- The maximum process flow rate is the same as the primary loop flow rate.
- At a given process return temperature, the mass flow rate decreases as the ROT increase.
- At a given ROT, the mass flow rate increases as the process return temperature increases.

It is recommended that:

- Steam process heat be analyzed at a variety of pressures and process inlet temperatures

- Other process fluids like nitrogen, carbon dioxide, or argon are analyzed as carriers of process heat.

6. REFERENCES

1. Melese, Gilbert, and Robert Katz., 1984, *Thermal Flow and Design of Helium Cooled Reactors*, American Nuclear Society.

2. Sato, Johnson, and Shultz, 2009, *Preliminary Studies of Coolant By-Pass Flows in a Prismatic Very High Temperature Reactor Using Computional Dynamics*, INL/CON-09-15885.

3. Gougar, Davis, Hayner, and Weaver, 2006, *Reactor Pressure Vessel Temperature Analysis of Candidate Very High Temperature Designs*, Oct 2006, INL/CON-06-11843.

4. Gougar and Davis, 2006, *Reactor Presssure Vessel Temperature Analysis for Prismatic and Pebble-Bed VHTR Designs*, April 2006, INL-EXT-06-11057.

5. AREVA, 2009, *NGNP Conceptual Design Baseline Document for Conventional Steam Cycle for Process Heat and Cogeneration*, Doc Num 51-9103803-002, April 28, 2009.

6. General Atomics, 2009, *Engineering Services for the Next Generation Nuclear Plant (NGNP) with Hydrogen Production: Nuclear Heat Supply System Point Design Study for NGNP Conceptual Design*, Doc 911167 Rev. 0, April 21, 2009.

7. *The Next Generation Nuclear Plant*, INL/EXT-08-15118.

8. *H2-MHR Conceptual Designs Based on the SI Process and HTE*, Authors Matt Richards, Arkal Shenoy, Ken Schultz, and Lloyd Brown – General Atomics; Ed Harvego and Michael McKellar – Idaho National Laboratory; Jean-Phillippe-Coupey and S. M. Moshin Reza –Texas A&M University; and Futoshi Okamoto – Fuji Electric Systems Norihiko Handa. Toshiba Corporation email: matt.richards@gat.com. *Third Information Exchange Meeting on Nuclear Production of Hydrogen and Second HTTR Workshop on Hydrogen Production Technologies,* October 5–7, 2005, Japan Atomic Energy Research Institute, Oarai, Japan.

9. Oh, C., R. Barner, C. Davis, B. Hawkes, J. Morton, and S. Sherman, 2007, *Power Cycle and Stress Analyses for High Temperature Gas-Cooled Reactor*, May 2007, INL/CON-06-12036.

10. Richards, M., A. Shenoy, K. Schultz, L. Brown, M. Fukuie, and E. Harvego, 2006, *The Modular Helium Reactor for Hydrogen Production*, INL/CON-06-11320.

11. Lamarsh, John R., and Anthony J. Baratta, *Introduction to Nuclear Engineering*, 3rd Ed. Prentice Hall, 2001.

12. Shultz, Richard R., 2007, *NGNP Engineering White Paper: Power Conversion System Trade Study*, INL/EXT-07-12727, April 2007.

13. General Atomics, 2008, *Power Conversion System Alternatives and Selection Study*, Report 911131 Rev.0, December 2008.

14. O'Brien, J. E., M. G. McKellar, and J. S. Herring, 2008, *Performance Predictions for Commercial-Scale High-Temperature Electrolysis Plants Coupled to Three Advanced Reactor Types*, *2008 International Congress on Advances in Nuclear Power Plants*, June 8–12, 2008, Anaheim, CA.

7. APPENDIXES

Appendix A: Power Cycle Process Model and Results

Appendix B: HTSE Process Model and Results

Appendix C: Process Heat Models and Results

Appendix A
Power Cycle Process Model and Results

The model of the power cycle process and results in Appendix A were developed using "HYSYS.Plant" version 2.2.2 (Build 3806) from Hyprotech Ltd. on a desktop computer running Microsoft Windows XP Professional Version 2002 Service Pack 3.

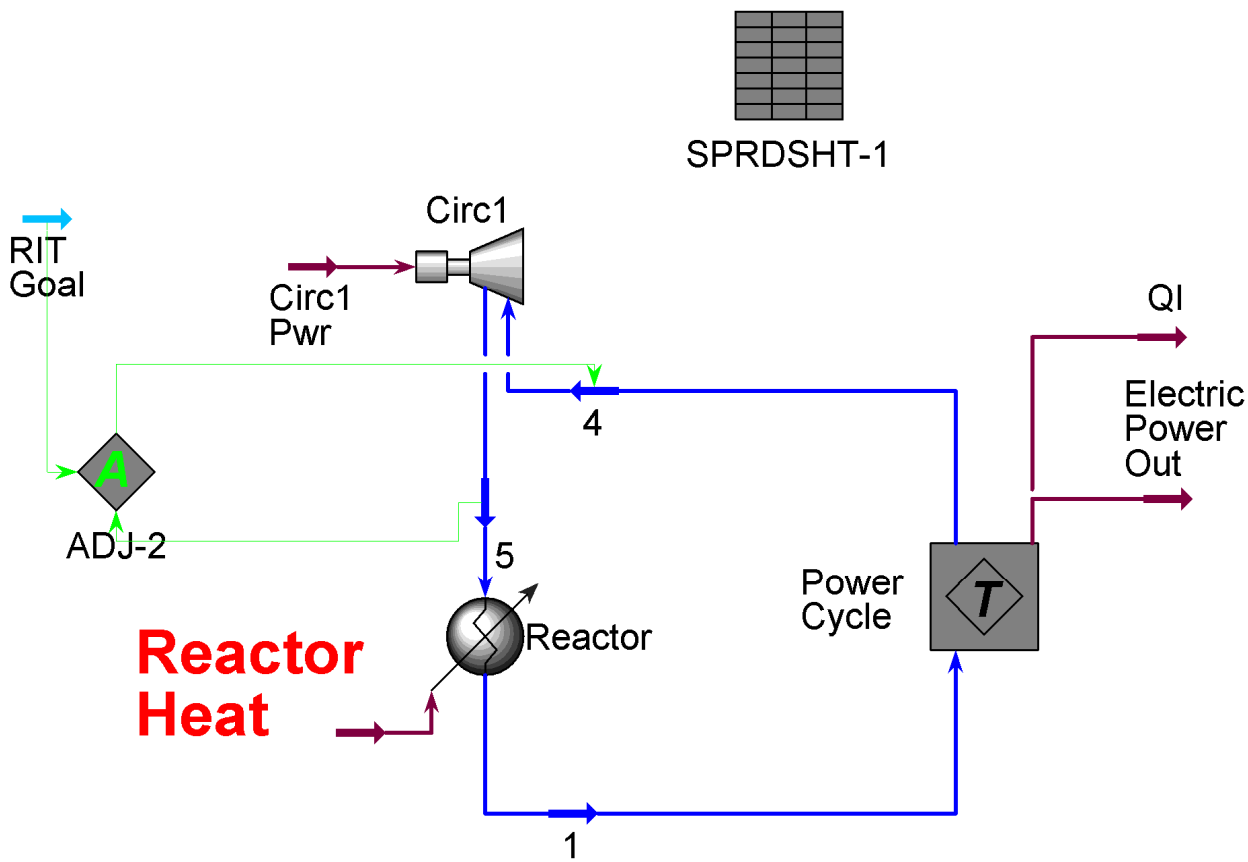

Figure A-1. Process model of power cycle

HYPROTECH

INL
Calgary, Alberta
CANADA

Case Name:	C:\Documents and Settings\mgq\Desktop\NGNP\Vary ROT\Power Cyc
Unit Set:	NGNP Econ
Date/Time:	Wed Aug 18 09:14:48 2010

Workbook: Case (Main)

Streams

Name		1	4	5	Circ1 Pwr	Electric Power Out
Vapour Fraction		1.0000	1.0000	1.0000	---	---
Temperature	(C)	950.00 *	520.78 *	536.79	---	---
Pressure	(MPa)	7.0000 *	6.8600	7.1400	---	---
Molar Flow	(kgmole/s)	69.881	69.881	69.881	---	---
Mass Flow	(kg/s)	279.73	279.73	279.73	---	---
Liquid Volume Flow	(m3/h)	8117	8117	8117	---	---
Heat Flow	(kW)	1.349e+006	7.251e+005	7.485e+005	2.343e+004	3.125e+005
Molar Enthalpy	(kJ/kgmole)	1.930e+004	1.038e+004	1.071e+004	---	---

Name		Ql	Reactor Heat	RIT Goal		
Vapour Fraction		---	---	---		
Temperature	(C)	---	---	536.79		
Pressure	(MPa)	---	---	---		
Molar Flow	(kgmole/s)	---	---	---		
Mass Flow	(kg/s)	---	---	---		
Liquid Volume Flow	(m3/h)	---	---	---		
Heat Flow	(kW)	3.110e+005	6.000e+005 *	---		
Molar Enthalpy	(kJ/kgmole)	---	---	---		

Composition

Name	1	4	5	RIT Goal	
Comp Mole Frac (Hydrogen)	0.00000 *	0.00000	0.00000	---	
Comp Mole Frac (H2O)	0.00000 *	0.00000	0.00000	---	
Comp Mole Frac (Oxygen)	0.00000 *	0.00000	0.00000	---	
Comp Mole Frac (Nitrogen)	0.00000 *	0.00000	0.00000	---	
Comp Mole Frac (CO2)	0.00000 *	0.00000	0.00000	---	
Comp Mole Frac (Argon)	0.00000 *	0.00000	0.00000	---	
Comp Mole Frac (Helium)	1.00000 *	1.00000	1.00000	---	
Comp Mole Frac (Methane)	0.00000 *	0.00000	0.00000	---	
Comp Mole Frac (CO)	0.00000 *	0.00000	0.00000	---	
Comp Mole Frac (NO)	0.00000 *	0.00000	0.00000	---	
Comp Mole Frac (NO2)	0.00000 *	0.00000	0.00000	---	
Comp Mole Frac (N2O)	0.00000 *	0.00000	0.00000	---	
Comp Mole Frac (N2O4)	0.00000 *	0.00000	0.00000	---	

Coolers

Name						
Duty	(kW)					
Feed Temperature	(C)					
Product Temperature	(C)					

Heat Exchangers

Name						
Duty	(kW)					
UA	(kJ/C-h)					
LMTD	(C)					
Minimum Approach	(C)					

Heaters

Name		Reactor				
Duty	(kW)	6.000e+005 *				
Feed Temperature	(C)	536.8				
Product Temperature	(C)	950.0 *				

INL Calgary, Alberta CANADA	Case Name:	C:\Documents and Settings\mgq\Desktop\NGNP\Vary ROT\Power Cyc
	Unit Set:	NGNP Econ
	Date/Time:	Wed Aug 18 09:14:48 2010

Workbook: Case (Main) (continued)

LNGs

Name						
UA (Calculated)	(kJ/C-h)					
LMTD	(C)					
Exchanger Cold Duty	(kW)					
Minimum Approach	(C)					

Compressors

Name		Circ1				
Feed Pressure	(MPa)	6.860				
Product Pressure	(MPa)	7.140				
Molar Flow	(kgmole/s)	69.88				
Energy	(kW)	2.343e+004				
Adiabatic Efficiency		80 *				
Polytropic Efficiency		80				

Expanders

Name						
Feed Pressure	(MPa)					
Product Pressure	(MPa)					
Molar Flow	(kgmole/s)					
Energy	(kW)					
Adiabatic Efficiency						
Polytropic Efficiency						

Pumps

Name						
Delta P	(MPa)					
Energy	(kW)					
Feed Pressure	(MPa)					
Product Pressure	(MPa)					
Molar Flow	(kgmole/s)					
Adiabatic Efficiency	(%)					

Unit Ops

Operation Name	Operation Type	Feeds	Products	Ignored	Calc. Level
Power Cycle	Standard Sub-Flowsheet	1	4	No	2500 *
			Electric Power Out		
			Ql		
SPRDSHT-1	Spreadsheet			No	500.0 *
Reactor	Heater	5	1	No	500.0 *
		Reactor Heat			
Circ1	Compressor	4	5	No	500.0 *
		Circ1 Pwr			
ADJ-2	Adjust			No	3500 *

INL Calgary, Alberta CANADA	Case Name: C:\Documents and Settings\mgq\Desktop\NGNP\Vary ROT\Power Cyc Unit Set: NGNP Econ Date/Time: Wed Aug 18 09:14:48 2010

Workbook: Power Cycle (TPL2)

Material Streams

Name		1 @TPL2	4 @TPL2			
Vapour Fraction		1.0000	1.0000			
Temperature	(C)	950.00	520.78			
Pressure	(MPa)	7.0000	6.8600			
Molar Flow	(kgmole/s)	69.881	69.881			
Mass Flow	(kg/s)	279.73	279.73			
Liquid Volume Flow	(m3/h)	8117	8117			
Heat Flow	(kW)	1.349e+006	7.251e+005			

Compositions

Name	1 @TPL2	4 @TPL2			
Comp Mole Frac (H2O)	0.00000	0.00000			
Comp Mole Frac (Helium)	1.00000	1.00000			

Energy Streams

Name		Qh @TPL2	Electric Power Out @	Ql @TPL2		
Heat Flow	(kW)	6.234e+005	3.125e+005	3.110e+005		

Unit Ops

Operation Name	Operation Type	Feeds	Products	Ignored	Calc. Level
HX @TPL2	Cooler	1 @TPL2	4 @TPL2 Qh @TPL2	No	500.0 *
SPRDSHT-1 @TPL2	Spreadsheet			No	500.0 *

Adjust: ADJ-2

Adjusted Variable		Measured Variable	
OBJECT	VARIABLE	OBJECT	VARIABLE
4	Temperature	5	Temperature

Solving Parameters

Source for Target Value:	Value from Object	Object:	RIT Goal	Offset:	0.0000 C *
Solving Method:	Secant	Tolerance:	1.000e-003 C *	Maximum Iterations:	1000 *
Step Size:	2.000 C *	Maximum:	---	Minimum:	---

User Variables

Spreadsheet: SPRDSHT-1

Units Set: NGNP

CONNECTIONS

Imported Variables

Cell	Object	Variable Description	Value
A1	Energy Stream: Reactor Heat	Heat Flow	6.000e+005 kW
A2	Energy Stream: Circ1 Pwr	Power	2.343e+004 kW
A3	Energy Stream: Electric Power Out	Power	3.125e+005 kW
A5	Material Stream: 1	Temperature	950.00 C

Exported Variables' Formula Results

Cell	Object	Variable Description	Value
A6	RIT Goal	Temperature	536.79 C

INL Calgary, Alberta CANADA	Case Name: C:\Documents and Settings\mgq\Desktop\NGNP\Vary ROT\Power Cyc Unit Set: NGNP Econ Date/Time: Wed Aug 18 09:14:48 2010

Spreadsheet: SPRDSHT-1 (continued)

Units Set: NGNP

PARAMETERS

Exportable Variables

Cell	Visible Name	Variable Description	Variable Type	Value
A4	A4: Net Power Cycle Efficiency	Net Power Cycle Efficiency	---	0.4817
A6	A6: Temperature	Temperature	Temperature	536.79 C
B1	B1:		---	<empty>
B2	B2:		---	<empty>

User Variables

FORMULAS

Cell	Formula	Result
A4	=(A3-A2)/A1	0.4817
A6	= 0.82049516*A5-242.67641718	536.79 C

Spreadsheet

	A	B	C	D		
1	6.000e+005 kW *	<empty> *				
2	2.343e+004 kW	<empty> *				
3	3.125e+005 kW					
4	0.4817					
5	950.00 C *					
6	536.79 C					
7						
8						
9						
10						

Spreadsheet: SPRDSHT-1 @TPL2

Units Set: NGNP

CONNECTIONS

Imported Variables

Cell	Object	Variable Description	Value
A2	Material Stream: 1 @TPL2	Temperature	950.00 C
A6	Energy Stream: Qh @TPL2	Heat Flow	6.234e+005 kW

Exported Variables' Formula Results

Cell	Object	Variable Description	Value
A7	Electric Power Out @TPL2	Power	3.125e+005 kW
A8	Ql @TPL2	Heat Flow	3.110e+005 kW

PARAMETERS

Exportable Variables

Cell	Visible Name	Variable Description	Variable Type	Value
A1	A1: Ambient Temperature	Ambient Temperature	Temperature	21.111 C
A3	A3: Carnot Efficiency	Carnot Efficiency	---	0.7594
A4	A4: Ideal factor	Ideal factor	---	0.6600
A5	A5: Power Cycle Efficiency	Power Cycle Efficiency	---	0.5012
A7	A7: Power	Power	Power	3.125e+005 kW
A8	A8: Heat Flow	Heat Flow	Energy	3.110e+005 kW

User Variables

* Specified by user.

INL
Calgary, Alberta
CANADA

Case Name:	C:\Documents and Settings\mgq\Desktop\NGNP\Vary ROT\Power Cyc
Unit Set:	NGNP Econ
Date/Time:	Wed Aug 18 09:14:48 2010

Spreadsheet: SPRDSHT-1 @TPL2 (continued)

Units Set: NGNP

FORMULAS

Cell	Formula	Result
A3	=(A2-A1)/(A2+273.15)	0.7594
A5	=A3*A4	0.5012
A7	=A5*A6	3.125e+005 kW
A8	=(1-A5)*A6	3.110e+005 kW

Spreadsheet

	A	B	C	D		
1	21.111 C *					
2	950.00 C					
3	0.7594					
4	0.6600 *					
5	0.5012					
6	6.234e+005 kW					
7	3.125e+005 kW					
8	3.110e+005 kW					
9						
10						

* Specified by user.

INL Calgary, Alberta CANADA	Case Name:	C:\Documents and Settings\mgq\Desktop\NGNP\Vary ROT\Power Cyc
	Unit Set:	NGNP Econ
	Date/Time:	Wed Aug 18 09:20:58 2010

Case Study Manager: Main

Data Recorder Results:

State						

Case Studies: Case Study 1

Independent Variables				Dependent Variables	
Variable	Low Bound	High Bound	Step Size	Variable	Display
				A5: Power Cycle Efficiency	Enabled
				A4: Net Power Cycle Efficiency	Enabled

Case Studies Results

State		State 1	State 2	State 3	State 4	State 5	State 6
1 - Temperature	(C)	200.00	210.00	220.00	230.00	240.00	250.00
A5: Power Cycle Efficiency		0.2495	0.2580	0.2662	0.2740	0.2815	0.2888
A4: Net Power Cycle Efficiency		0.2387	0.2470	0.2549	0.2625	0.2698	0.2768
State		State 7	State 8	State 9	State 10	State 11	State 12
1 - Temperature	(C)	260.00	270.00	280.00	290.00	300.00	310.00
A5: Power Cycle Efficiency		0.2957	0.3024	0.3089	0.3151	0.3211	0.3270
A4: Net Power Cycle Efficiency		0.2836	0.2901	0.2964	0.3024	0.3083	0.3139
State		State 13	State 14	State 15	State 16	State 17	State 18
1 - Temperature	(C)	320.00	330.00	340.00	350.00	360.00	370.00
A5: Power Cycle Efficiency		0.3326	0.3380	0.3433	0.3483	0.3533	0.3580
A4: Net Power Cycle Efficiency		0.3193	0.3246	0.3297	0.3346	0.3394	0.3440
State		State 19	State 20	State 21	State 22	State 23	State 24
1 - Temperature	(C)	380.00	390.00	400.00	410.00	420.00	430.00
A5: Power Cycle Efficiency		0.3627	0.3671	0.3715	0.3757	0.3798	0.3838
A4: Net Power Cycle Efficiency		0.3485	0.3528	0.3570	0.3611	0.3650	0.3689
State		State 25	State 26	State 27	State 28	State 29	State 30
1 - Temperature	(C)	440.00	450.00	460.00	470.00	480.00	490.00
A5: Power Cycle Efficiency		0.3877	0.3914	0.3951	0.3987	0.4021	0.4055
A4: Net Power Cycle Efficiency		0.3726	0.3763	0.3798	0.3833	0.3866	0.3899
State		State 31	State 32	State 33	State 34	State 35	State 36
1 - Temperature	(C)	500.00	510.00	520.00	530.00	540.00	550.00
A5: Power Cycle Efficiency		0.4088	0.4120	0.4151	0.4182	0.4212	0.4241
A4: Net Power Cycle Efficiency		0.3930	0.3961	0.3991	0.4021	0.4050	0.4077
State		State 37	State 38	State 39	State 40	State 41	State 42
1 - Temperature	(C)	560.00	570.00	580.00	590.00	600.00	610.00
A5: Power Cycle Efficiency		0.4269	0.4297	0.4324	0.4350	0.4376	0.4401
A4: Net Power Cycle Efficiency		0.4105	0.4131	0.4157	0.4183	0.4208	0.4232
State		State 43	State 44	State 45	State 46	State 47	State 48
1 - Temperature	(C)	620.00	630.00	640.00	650.00	660.00	670.00
A5: Power Cycle Efficiency		0.4426	0.4450	0.4473	0.4496	0.4519	0.4541
A4: Net Power Cycle Efficiency		0.4255	0.4279	0.4301	0.4323	0.4345	0.4366
State		State 49	State 50	State 51	State 52	State 53	State 54
1 - Temperature	(C)	680.00	690.00	700.00	710.00	720.00	730.00
A5: Power Cycle Efficiency		0.4562	0.4584	0.4604	0.4625	0.4644	0.4664
A4: Net Power Cycle Efficiency		0.4387	0.4407	0.4427	0.4447	0.4466	0.4484
State		State 55	State 56	State 57	State 58	State 59	State 60
1 - Temperature	(C)	740.00	750.00	760.00	770.00	780.00	790.00
A5: Power Cycle Efficiency		0.4683	0.4702	0.4720	0.4738	0.4756	0.4773
A4: Net Power Cycle Efficiency		0.4503	0.4521	0.4538	0.4555	0.4572	0.4589
State		State 61	State 62	State 63	State 64	State 65	State 66
1 - Temperature	(C)	800.00	810.00	820.00	830.00	840.00	850.00
A5: Power Cycle Efficiency		0.4790	0.4807	0.4823	0.4839	0.4855	0.4871
A4: Net Power Cycle Efficiency		0.4605	0.4621	0.4637	0.4652	0.4668	0.4682
State		State 67	State 68	State 69	State 70	State 71	State 72

Licensed to: INL

* Specified by user.

INL
Calgary, Alberta
CANADA

Case Name:	C:\Documents and Settings\mgq\Desktop\NGNP\Vary ROT\Power Cyc
Unit Set:	NGNP Econ
Date/Time:	Wed Aug 18 09:20:58 2010

Case Study Manager: Main (continued)

Case Studies Results

1 - Temperature (C)	860.00	870.00	880.00	890.00	900.00	910.00
A5: Power Cycle Efficiency	0.4886	0.4901	0.4916	0.4930	0.4945	0.4959
A4: Net Power Cycle Efficiency	0.4697	0.4711	0.4725	0.4739	0.4753	0.4766
State	State 73	State 74	State 75	State 76	State 77	State 78
1 - Temperature (C)	920.00	930.00	940.00	950.00	960.00	970.00
A5: Power Cycle Efficiency	0.4972	0.4986	0.4999	0.5012	0.5025	0.5038
A4: Net Power Cycle Efficiency	0.4779	0.4792	0.4805	0.4817	0.4830	0.4842
State	State 79	State 80	State 81			
1 - Temperature (C)	980.00	990.00	1000.0			
A5: Power Cycle Efficiency	0.5050	0.5062	0.5075			
A4: Net Power Cycle Efficiency	0.4854	0.4865	0.4877			

INL Calgary, Alberta CANADA	Case Name: C:\Documents and Settings\mgq\Desktop\NGNP\Vary ROT\Power Cyc Unit Set: NGNP Econ Date/Time: Wed Aug 18 09:21:55 2010

Case Study Manager: Main

Data Recorder Results:

State						

Case Studies: Case Study 2

Independent Variables				Dependent Variables	
Variable	Low Bound	High Bound	Step Size	Variable	Display
1 - Temperature	650.00 C *	950.00 C *	10.00 C *	5 - Temperature	Enabled
				1 - Mass Flow	Enabled
				Circ1 Pwr - Power	Enabled
				Electric Power Out - Power	Enabled
				A4: Net Power Cycle Efficiency	Enabled
				A5: Power Cycle Efficiency	Enabled

Case Studies Results

State		State 1	State 2	State 3	State 4	State 5	State 6
1 - Temperature	(C)	650.00	660.00	670.00	680.00	690.00	700.00
5 - Temperature	(C)	290.65	298.85	307.06	315.26	323.47	331.67
1 - Mass Flow	(kg/s)	321.75	320.15	318.56	316.99	315.43	313.89
Circ1 Pwr - Power	(kW)	1.885e+004	1.902e+004	1.919e+004	1.936e+004	1.953e+004	1.970e+004
Electric Power Out - Power	(kW)	2.782e+005	2.797e+005	2.812e+005	2.826e+005	2.840e+005	2.853e+005
A4: Net Power Cycle Efficiency		0.4323	0.4345	0.4366	0.4387	0.4407	0.4427
A5: Power Cycle Efficiency		0.4496	0.4519	0.4541	0.4562	0.4584	0.4604
State		State 7	State 8	State 9	State 10	State 11	State 12
1 - Temperature	(C)	710.00	720.00	730.00	740.00	750.00	760.00
5 - Temperature	(C)	339.88	348.08	356.29	364.49	372.69	380.90
1 - Mass Flow	(kg/s)	312.37	310.85	309.36	307.88	306.41	304.95
Circ1 Pwr - Power	(kW)	1.987e+004	2.003e+004	2.020e+004	2.036e+004	2.052e+004	2.068e+004
Electric Power Out - Power	(kW)	2.867e+005	2.880e+005	2.893e+005	2.905e+005	2.918e+005	2.930e+005
A4: Net Power Cycle Efficiency		0.4447	0.4466	0.4484	0.4503	0.4521	0.4538
A5: Power Cycle Efficiency		0.4625	0.4644	0.4664	0.4683	0.4702	0.4720
State		State 13	State 14	State 15	State 16	State 17	State 18
1 - Temperature	(C)	770.00	780.00	790.00	800.00	810.00	820.00
5 - Temperature	(C)	389.10	397.31	405.51	413.72	421.92	430.13
1 - Mass Flow	(kg/s)	303.51	302.09	300.67	299.27	297.89	296.51
Circ1 Pwr - Power	(kW)	2.084e+004	2.099e+004	2.115e+004	2.130e+004	2.145e+004	2.160e+004
Electric Power Out - Power	(kW)	2.942e+005	2.953e+005	2.965e+005	2.976e+005	2.987e+005	2.998e+005
A4: Net Power Cycle Efficiency		0.4555	0.4572	0.4589	0.4605	0.4621	0.4637
A5: Power Cycle Efficiency		0.4738	0.4756	0.4773	0.4790	0.4807	0.4823
State		State 19	State 20	State 21	State 22	State 23	State 24
1 - Temperature	(C)	830.00	840.00	850.00	860.00	870.00	880.00
5 - Temperature	(C)	438.33	446.54	454.74	462.95	471.15	479.36
1 - Mass Flow	(kg/s)	295.15	293.80	292.46	291.14	289.83	288.52
Circ1 Pwr - Power	(kW)	2.175e+004	2.190e+004	2.204e+004	2.219e+004	2.233e+004	2.247e+004
Electric Power Out - Power	(kW)	3.009e+005	3.019e+005	3.030e+005	3.040e+005	3.050e+005	3.060e+005
A4: Net Power Cycle Efficiency		0.4652	0.4668	0.4682	0.4697	0.4711	0.4725
A5: Power Cycle Efficiency		0.4839	0.4855	0.4871	0.4886	0.4901	0.4916
State		State 25	State 26	State 27	State 28	State 29	State 30
1 - Temperature	(C)	890.00	900.00	910.00	920.00	930.00	940.00
5 - Temperature	(C)	487.56	495.77	503.97	512.18	520.38	528.59
1 - Mass Flow	(kg/s)	287.23	285.96	284.69	283.43	282.19	280.96
Circ1 Pwr - Power	(kW)	2.261e+004	2.275e+004	2.289e+004	2.303e+004	2.316e+004	2.330e+004
Electric Power Out - Power	(kW)	3.070e+005	3.079e+005	3.089e+005	3.098e+005	3.107e+005	3.116e+005
A4: Net Power Cycle Efficiency		0.4739	0.4753	0.4766	0.4779	0.4792	0.4805
A5: Power Cycle Efficiency		0.4930	0.4945	0.4959	0.4972	0.4986	0.4999
State		State 31					

Licensed to: INL

* Specified by user.

INL
Calgary, Alberta
CANADA

Case Name:	C:\Documents and Settings\mgq\Desktop\NGNP\Vary ROT\Power Cyc
Unit Set:	NGNP Econ
Date/Time:	Wed Aug 18 09:21:55 2010

Case Study Manager: Main (continued)

Case Studies Results

1 - Temperature	(C)	950.00					
5 - Temperature	(C)	536.79					
1 - Mass Flow	(kg/s)	279.73					
Circ1 Pwr - Power	(kW)	2.343e+004					
Electric Power Out - Power	(kW)	3.125e+005					
A4: Net Power Cycle Efficiency		0.4817					
A5: Power Cycle Efficiency		0.5012					

Appendix B
HTSE Process Model and Results

The model of the high-temperature steam electrolysis process and results in Appendix B were developed using "HYSYS.Plant" version 2.2.2 (Build 3806) from Hyprotech Ltd. on a desktop computer running Microsoft Windows XP Professional Version 2002 Service Pack 3.

B-1 HTSE with Steam Sweep

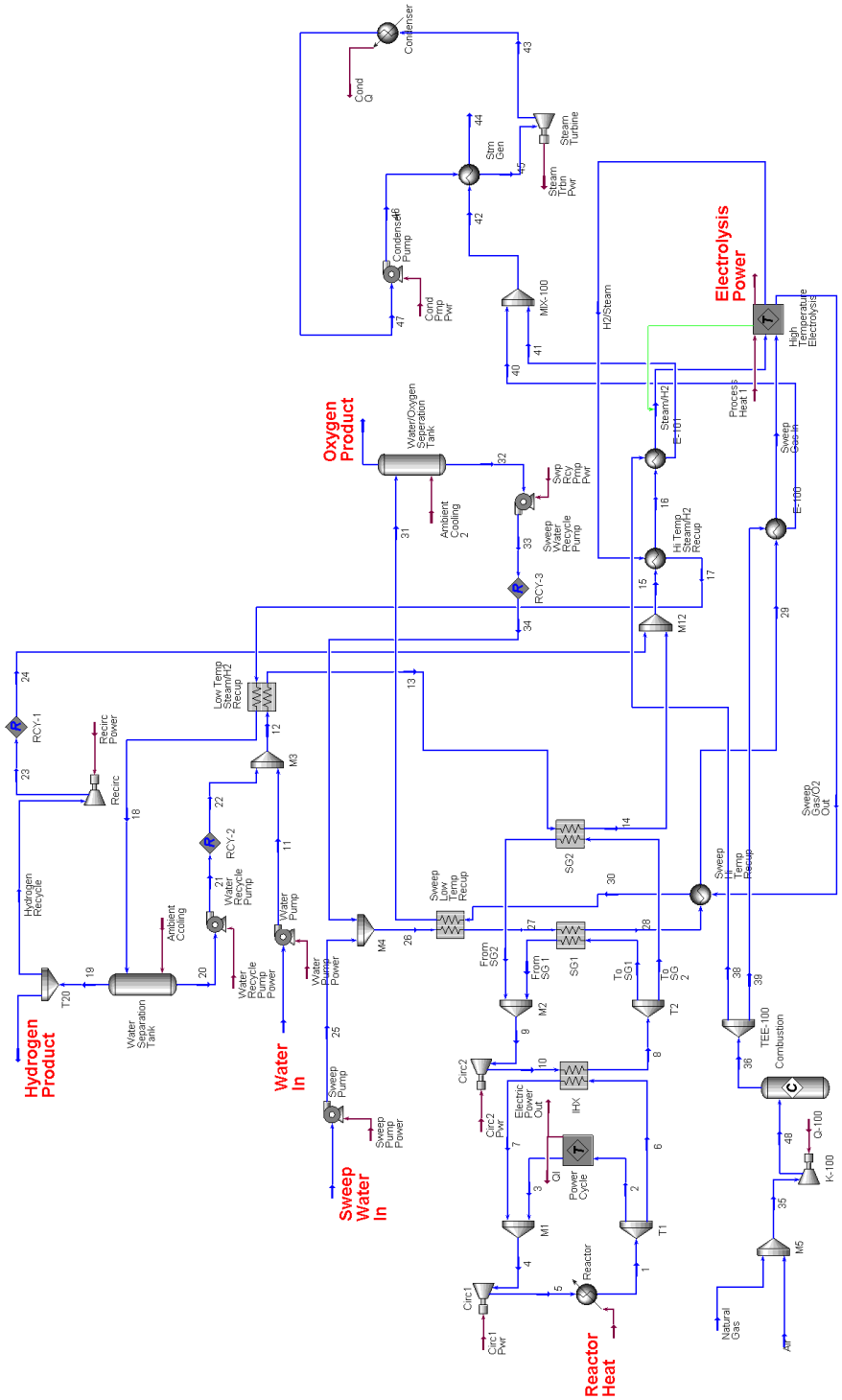

Figure B-1. Process Model of HTSE Below ROT of 850°C with Steam Sweep

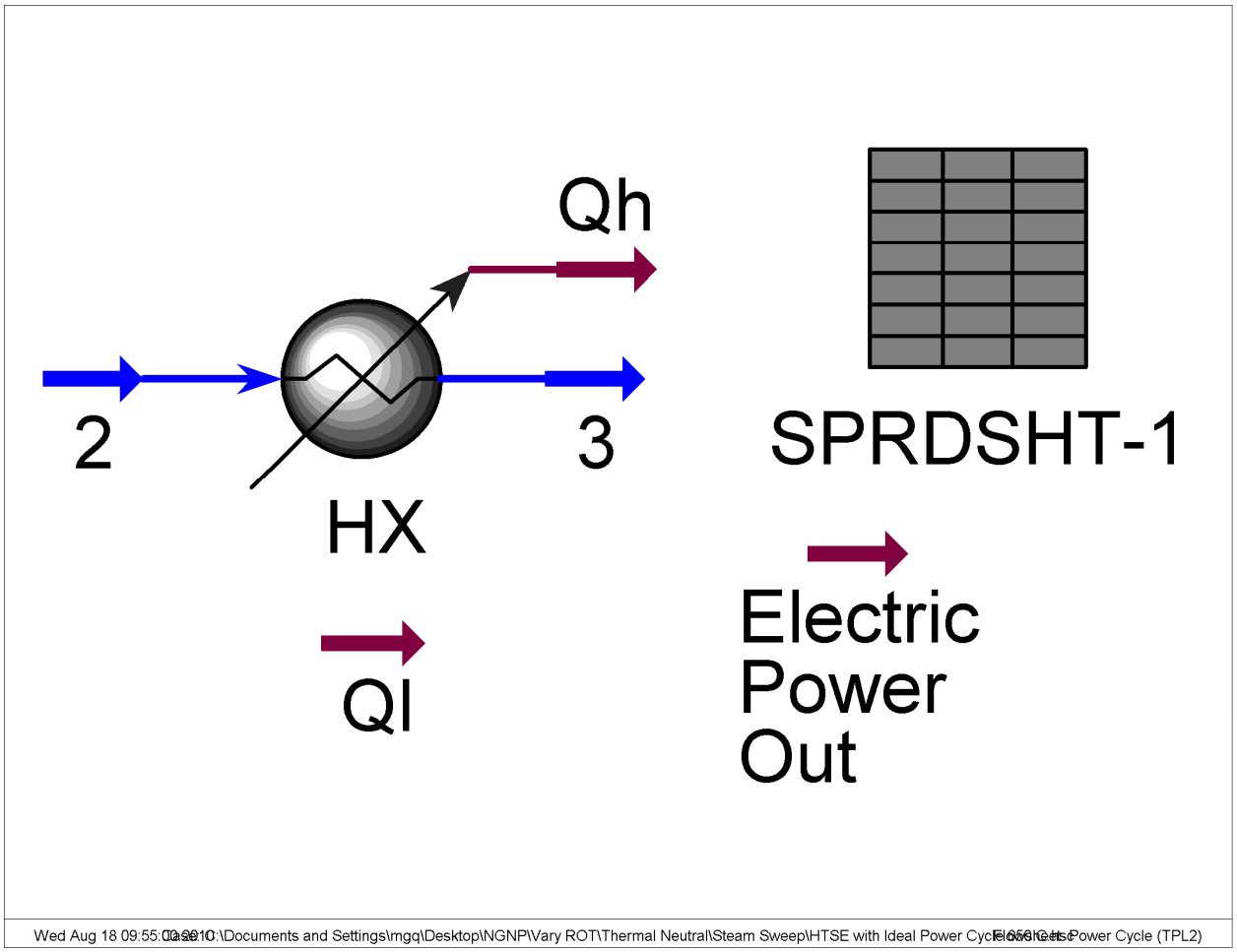

Figure B-2. Power cycle model

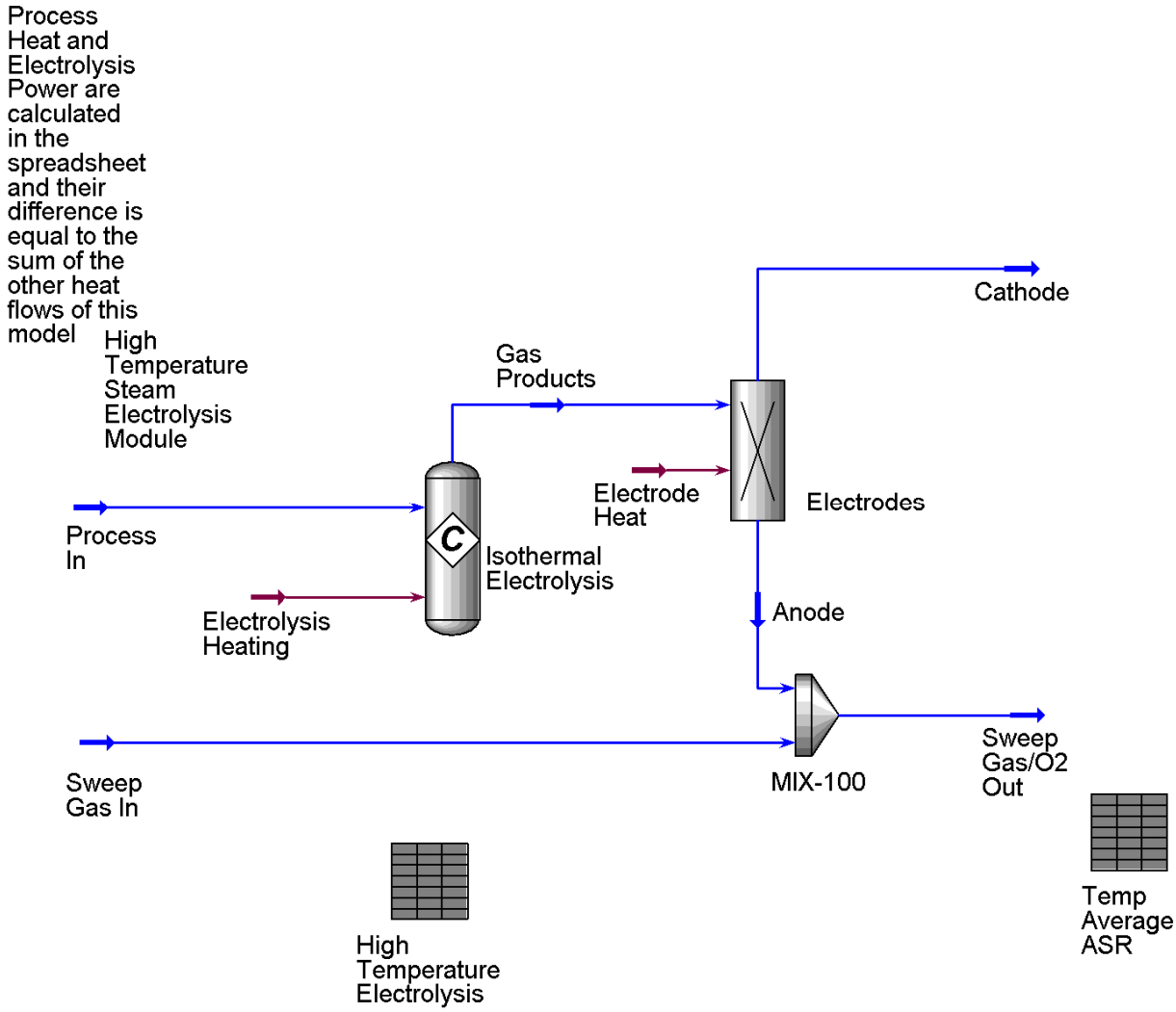

Figure B-3. Electrolysis process model.

INL Calgary, Alberta CANADA	Case Name: C:\Documents and Settings\mgq\Desktop\NGNP\Vary ROT\Thermal Ne Unit Set: NGNP Econ Date/Time: Wed Aug 18 11:23:24 2010

Workbook: Case (Main)

Streams

Name		1	2	3	4	5
Vapour Fraction		1.0000	1.0000	1.0000	1.0000	1.0000
Temperature	(C)	650.00 *	650.00	276.12	282.18 *	290.65
Pressure	(MPa)	7.0000 *	7.0000	6.8600	6.8600	7.0710
Molar Flow	(kgmole/s)	80.370	71.388	71.388	80.370	80.370
Mass Flow	(kg/s)	321.72	285.76	285.76	321.72	321.72
Liquid Volume Flow	(m3/h)	9335	8292	8292	9335	9335
Heat Flow	(kW)	1.050e+006	9.325e+005	3.778e+005	4.355e+005	4.498e+005
Molar Enthalpy	(kJ/kgmole)	1.306e+004	1.306e+004	5293	5419	5597
Name		6	7	8	9	10
Vapour Fraction		1.0000	1.0000	1.0000	1.0000	1.0000
Temperature	(C)	650.00	330.36	625.00 *	293.91	305.36
Pressure	(MPa)	7.0000	6.8600	7.0000 *	6.8600	7.1400
Molar Flow	(kgmole/s)	8.9822	8.9822	8.9863	8.9863	8.9863
Mass Flow	(kg/s)	35.956	35.956	35.972	35.972	35.972
Liquid Volume Flow	(m3/h)	1043	1043	1044	1044	1044
Heat Flow	(kW)	1.173e+005	5.766e+004	1.127e+005	5.089e+004	5.305e+004
Molar Enthalpy	(kJ/kgmole)	1.306e+004	6420	1.254e+004	5663	5903
Name		11	12	13	14	15
Vapour Fraction		0.0000	0.0000	0.1542	1.0000	1.0000
Temperature	(C)	27.317	26.896	268.86	600.00 *	557.36
Pressure	(MPa)	5.4000	5.4000	5.3000	5.2000	5.2000
Molar Flow	(kgmole/s)	0.93491	1.4012	1.4012	1.4012	1.5570
Mass Flow	(kg/s)	16.843	25.242	25.242	25.242	25.558
Liquid Volume Flow	(m3/h)	60.76	91.06	91.06	91.06	107.2
Heat Flow	(kW)	-2.666e+005	-3.996e+005	-3.645e+005	-3.096e+005	-3.096e+005
Molar Enthalpy	(kJ/kgmole)	-2.851e+005	-2.852e+005	-2.601e+005	-2.210e+005	-1.988e+005
Name		16	17	18	19	20
Vapour Fraction		1.0000	1.0000	0.7724	1.0000	0.0000
Temperature	(C)	740.58	577.36	144.00	26.000	26.000 *
Pressure	(MPa)	5.1000	4.9000	4.8000	4.8000	4.8000
Molar Flow	(kgmole/s)	1.5570	1.5570	1.5570	1.0908	0.46618
Mass Flow	(kg/s)	25.558	10.612	10.612	2.2140	8.3979
Liquid Volume Flow	(m3/h)	107.2	143.6	143.6	113.3	30.30
Heat Flow	(kW)	-2.979e+005	-8.576e+004	-1.209e+005	-195.7	-1.330e+005
Molar Enthalpy	(kJ/kgmole)	-1.913e+005	-5.508e+004	-7.762e+004	-179.4	-2.852e+005
Name		21	22	23	24	25
Vapour Fraction		0.0000	0.0000	1.0000	1.0000	0.0000
Temperature	(C)	26.052	26.052 *	35.491	35.491 *	27.317
Pressure	(MPa)	5.4000	5.4000 *	5.2000	5.2000 *	5.4000
Molar Flow	(kgmole/s)	0.46618	0.46625 *	0.15625	0.15580 *	5.2014e-004
Mass Flow	(kg/s)	8.3979	8.3991	0.31714	0.31624	9.3704e-003
Liquid Volume Flow	(m3/h)	30.30	30.30	16.23	16.18	3.380e-002
Heat Flow	(kW)	-1.330e+005	-1.330e+005	14.68	14.64	-148.3
Molar Enthalpy	(kJ/kgmole)	-2.852e+005	-2.852e+005	93.95	93.95	-2.851e+005
Name		26	27	28	29	30
Vapour Fraction		0.0000	0.9724	1.0000	1.0000	1.0000
Temperature	(C)	27.053	268.85	600.00 *	780.00	701.07
Pressure	(MPa)	5.4000	5.3000	5.2000	5.1000	4.9000
Molar Flow	(kgmole/s)	0.46719	0.46719	0.46719	0.46719	0.93425
Mass Flow	(kg/s)	8.4173 *	8.4173	8.4173	8.4173	23.363
Liquid Volume Flow	(m3/h)	30.36	30.36	30.36	30.36	77.66
Heat Flow	(kW)	-1.332e+005	-1.102e+005	-1.032e+005	-9.963e+004	-9.090e+004
Molar Enthalpy	(kJ/kgmole)	-2.851e+005	-2.358e+005	-2.209e+005	-2.133e+005	-9.730e+004

HYPROTECH	INL Calgary, Alberta CANADA	Case Name: C:\Documents and Settings\mgq\Desktop\NGNP\Vary ROT\Thermal Ne Unit Set: NGNP Econ Date/Time: Wed Aug 18 11:23:24 2010

Workbook: Case (Main) (continued)

Streams (continued)

Name		31	32	33	34	35
Vapour Fraction		0.8175	0.0000	0.0000	0.0000	1.0000
Temperature	(C)	203.66	27.000	27.052	27.052 *	21.103
Pressure	(MPa)	4.8000	4.8000	5.4000	5.4000 *	0.11032
Molar Flow	(kgmole/s)	0.93425	0.46667	0.46667	0.46667 *	9.6299e-002
Mass Flow	(kg/s)	23.363	8.4080	8.4080	8.4080	2.6722
Liquid Volume Flow	(m3/h)	77.66	30.33	30.33	30.33	12.16
Heat Flow	(kW)	-1.139e+005	-1.331e+005	-1.331e+005	-1.331e+005	-632.2
Molar Enthalpy	(kJ/kgmole)	-1.219e+005	-2.851e+005	-2.851e+005	-2.851e+005	-6565
Name		36	37	38	41	39
Vapour Fraction		1.0000	0.0000	1.0000	1.0000	1.0000
Temperature	(C)	1889.3	1889.3	1889.3	765.58	1889.3
Pressure	(MPa)	0.13790	0.13790	0.13790	0.13290	0.13790
Molar Flow	(kgmole/s)	9.6300e-002	0.00000	8.6832e-002	8.6832e-002	9.4678e-003
Mass Flow	(kg/s)	2.6722	0.00000	2.4095	2.4095	0.26272 *
Liquid Volume Flow	(m3/h)	11.56	0.0000	10.42	10.42	1.136
Heat Flow	(kW)	-559.9	0.0000	-504.9	-4380	-55.05
Molar Enthalpy	(kJ/kgmole)	-5815	-5815	-5815	-5.045e+004	-5815
Name		44	42	45	40	43
Vapour Fraction		1.0000	1.0000	1.0000	1.0000	0.9289
Temperature	(C)	148.89 *	769.47	550.00 *	805.00	46.664
Pressure	(MPa)	0.12790	0.13290	9.7000	0.13290	1.0342e-002 *
Molar Flow	(kgmole/s)	9.6300e-002	9.6300e-002	3.3826e-002	9.4678e-003	3.3826e-002
Mass Flow	(kg/s)	2.6722	2.6722	0.60938	0.26272	0.60938
Liquid Volume Flow	(m3/h)	11.56	11.56	2.198	1.136	2.198
Heat Flow	(kW)	-6881	-4844	-7576	-464.1	-8232
Molar Enthalpy	(kJ/kgmole)	-7.145e+004	-5.031e+004	-2.240e+005	-4.901e+004	-2.434e+005
Name		46	Air	47	48	Ambient Cooling
Vapour Fraction		0.0000	1.0000	0.0000	1.0000	---
Temperature	(C)	38.718	21.111 *	37.778 *	46.285	---
Pressure	(MPa)	10.000 *	0.11032 *	1.0342e-002	0.13790 *	---
Molar Flow	(kgmole/s)	3.3826e-002	8.8020e-002	3.3826e-002	9.6299e-002	---
Mass Flow	(kg/s)	0.60938	2.5394	0.60938	2.6722	---
Liquid Volume Flow	(m3/h)	2.198	10.57	2.198	12.16	---
Heat Flow	(kW)	-9613	-10.79	-9621	-559.9	-1.231e+004
Molar Enthalpy	(kJ/kgmole)	-2.842e+005	-122.5	-2.844e+005	-5815	---
Name		Ambient Cooling 2	Circ1 Pwr	Circ2 Pwr	Cond Pmp Pwr	Cond Q
Vapour Fraction		---	---	---	---	---
Temperature	(C)	---	---	---	---	---
Pressure	(MPa)	---	---	---	---	---
Molar Flow	(kgmole/s)	---	---	---	---	---
Mass Flow	(kg/s)	---	---	---	---	---
Liquid Volume Flow	(m3/h)	---	---	---	---	---
Heat Flow	(kW)	-1.944e+004	1.431e+004	2162	8.136	1388
Molar Enthalpy	(kJ/kgmole)	---	---	---	---	---
Name		From SG2	From SG 1	H2/Steam	Electric Power Out	Hydrogen Product
Vapour Fraction		1.0000	1.0000	1.0000	---	1.0000
Temperature	(C)	293.91	293.93	800.00	---	26.000
Pressure	(MPa)	6.8600	6.8600	5.0000	---	4.8000
Molar Flow	(kgmole/s)	7.9741	1.0122	1.5570	---	0.93453
Mass Flow	(kg/s)	31.920	4.0520	10.612	---	1.8968
Liquid Volume Flow	(m3/h)	926.2	117.6	143.6	---	97.06
Heat Flow	(kW)	4.515e+004	5732	-7.406e+004	2.494e+005	-167.7
Molar Enthalpy	(kJ/kgmole)	5663	5663	-4.757e+004	---	-179.4

INL Calgary, Alberta CANADA	Case Name: C:\Documents and Settings\mgq\Desktop\NGNP\Vary ROT\Thermal Ne Unit Set: NGNP Econ Date/Time: Wed Aug 18 11:23:24 2010

Workbook: Case (Main) (continued)

Streams (continued)

Name		Electrolysis Power	Hydrogen Recycle	Natural Gas	Oxygen Product	Process Heat 1
Vapour Fraction		---	1.0000	1.0000	1.0000	---
Temperature	(C)	---	26.000	21.111 *	27.000 *	---
Pressure	(MPa)	---	4.8000	0.11032	4.8000	---
Molar Flow	(kgmole/s)	---	0.15625	8.2791e-003	0.46758	---
Mass Flow	(kg/s)	---	0.31714	0.13282 *	14.955	---
Liquid Volume Flow	(m3/h)	---	16.23	1.597	47.33	---
Heat Flow	(kW)	-2.319e+005	-28.04	-621.4	-300.2	-9.459e-011
Molar Enthalpy	(kJ/kgmole)	---	-179.4	-7.506e+004	-642.0	---
Name		Sweep Gas In	Sweep Gas/O2 Out	Sweep Water In	To SG1	To SG 2
Vapour Fraction		1.0000	1.0000	0.0000	1.0000	1.0000
Temperature	(C)	800.00	800.00	26.850 *	625.00	625.00
Pressure	(MPa)	5.0000	5.0000	0.10132 *	7.0000	7.0000
Molar Flow	(kgmole/s)	0.46719	0.93425	5.2014e-004	1.0122	7.9741
Mass Flow	(kg/s)	8.4173	23.363	9.3704e-003	4.0520 *	31.920 *
Liquid Volume Flow	(m3/h)	30.36	77.66	3.380e-002	117.6	926.2
Heat Flow	(kW)	-9.922e+004	-8.732e+004	-148.4	1.270e+004	1.000e+005
Molar Enthalpy	(kJ/kgmole)	-2.124e+005	-9.346e+004	-2.853e+005	1.254e+004	1.254e+004
Name		Water In	Q-100	Recirc Power	Steam/H2	Water Pump Power
Vapour Fraction		0.0000	---	---	1.0000	---
Temperature	(C)	26.850 *	---	---	800.00 *	---
Pressure	(MPa)	0.10132 *	---	---	5.0000 *	---
Molar Flow	(kgmole/s)	0.93491	---	---	1.5570	---
Mass Flow	(kg/s)	16.843	---	---	25.558 *	---
Liquid Volume Flow	(m3/h)	60.76	---	---	107.2	---
Heat Flow	(kW)	-2.667e+005	72.28	42.72	-2.940e+005	118.3
Molar Enthalpy	(kJ/kgmole)	-2.853e+005	---	---	-1.888e+005	---
Name		QI	Reactor Heat	RIT Goal	Steam Trbn Pwr	Sweep Pump Power
Vapour Fraction		---	---	---	---	---
Temperature	(C)	---	---	290.65	---	---
Pressure	(MPa)	---	---	---	---	---
Molar Flow	(kgmole/s)	---	---	---	---	---
Mass Flow	(kg/s)	---	---	---	---	---
Liquid Volume Flow	(m3/h)	---	---	---	---	---
Heat Flow	(kW)	3.053e+005	6.000e+005 *	---	655.8	6.581e-002
Molar Enthalpy	(kJ/kgmole)	---	---	---	---	---
Name		Swp Rcy Pmp Pwr	Water Recycle Pump			
Vapour Fraction		---	---			
Temperature	(C)	---	---			
Pressure	(MPa)	---	---			
Molar Flow	(kgmole/s)	---	---			
Mass Flow	(kg/s)	---	---			
Liquid Volume Flow	(m3/h)	---	---			
Heat Flow	(kW)	6.678	6.666			
Molar Enthalpy	(kJ/kgmole)	---	---			

Composition

Name	1	2	3	4	5
Comp Mole Frac (Hydrogen)	0.00000 *	0.00000	0.00000	0.00000	0.00000
Comp Mole Frac (H2O)	0.00000 *	0.00000	0.00000	0.00000	0.00000
Comp Mole Frac (Oxygen)	0.00000 *	0.00000	0.00000	0.00000	0.00000
Comp Mole Frac (Nitrogen)	0.00000 *	0.00000	0.00000	0.00000	0.00000
Comp Mole Frac (CO2)	0.00000 *	0.00000	0.00000	0.00000	0.00000
Comp Mole Frac (Helium)	1.00000 *	1.00000	1.00000	1.00000	1.00000
Comp Mole Frac (Methane)	0.00000 *	0.00000	0.00000	0.00000	0.00000

INL Calgary, Alberta CANADA	Case Name:	C:\Documents and Settings\mgq\Desktop\NGNP\Vary ROT\Thermal Ne
	Unit Set:	NGNP Econ
	Date/Time:	Wed Aug 18 11:23:24 2010

Workbook: Case (Main) (continued)

Composition (continued)

Name	6	7	8	9	10
Comp Mole Frac (Hydrogen)	0.00000	0.00000	0.00000	0.00000	0.00000
Comp Mole Frac (H2O)	0.00000	0.00000	0.00000	0.00000	0.00000
Comp Mole Frac (Oxygen)	0.00000	0.00000	0.00000	0.00000	0.00000
Comp Mole Frac (Nitrogen)	0.00000	0.00000	0.00000	0.00000	0.00000
Comp Mole Frac (CO2)	0.00000	0.00000	0.00000	0.00000	0.00000
Comp Mole Frac (Helium)	1.00000	1.00000	1.00000	1.00000	1.00000
Comp Mole Frac (Methane)	0.00000	0.00000	0.00000	0.00000	0.00000
Name	11	12	13	14	15
Comp Mole Frac (Hydrogen)	0.00000	0.00002	0.00002	0.00002	0.10000
Comp Mole Frac (H2O)	1.00000	0.99998	0.99998	0.99998	0.90000
Comp Mole Frac (Oxygen)	0.00000	0.00000	0.00000	0.00000	0.00000
Comp Mole Frac (Nitrogen)	0.00000	0.00000	0.00000	0.00000	0.00000
Comp Mole Frac (CO2)	0.00000	0.00000	0.00000	0.00000	0.00000
Comp Mole Frac (Helium)	0.00000	0.00000	0.00000	0.00000	0.00000
Comp Mole Frac (Methane)	0.00000	0.00000	0.00000	0.00000	0.00000
Name	16	17	18	19	20
Comp Mole Frac (Hydrogen)	0.10000	0.70000	0.70000	0.99914	0.00005
Comp Mole Frac (H2O)	0.90000	0.30000	0.30000	0.00086	0.99995
Comp Mole Frac (Oxygen)	0.00000	0.00000	0.00000	0.00000	0.00000
Comp Mole Frac (Nitrogen)	0.00000	0.00000	0.00000	0.00000	0.00000
Comp Mole Frac (CO2)	0.00000	0.00000	0.00000	0.00000	0.00000
Comp Mole Frac (Helium)	0.00000	0.00000	0.00000	0.00000	0.00000
Comp Mole Frac (Methane)	0.00000	0.00000	0.00000	0.00000	0.00000
Name	21	22	23	24	25
Comp Mole Frac (Hydrogen)	0.00005	0.00005 *	0.99914	0.99914 *	0.00000
Comp Mole Frac (H2O)	0.99995	0.99995 *	0.00086	0.00086 *	1.00000
Comp Mole Frac (Oxygen)	0.00000	0.00000 *	0.00000	0.00000 *	0.00000
Comp Mole Frac (Nitrogen)	0.00000	0.00000 *	0.00000	0.00000 *	0.00000
Comp Mole Frac (CO2)	0.00000	0.00000 *	0.00000	0.00000 *	0.00000
Comp Mole Frac (Helium)	0.00000	0.00000 *	0.00000	0.00000 *	0.00000
Comp Mole Frac (Methane)	0.00000	0.00000 *	0.00000	0.00000 *	0.00000
Name	26	27	28	29	30
Comp Mole Frac (Hydrogen)	0.00000	0.00000	0.00000	0.00000	0.00000
Comp Mole Frac (H2O)	0.99986	0.99986	0.99986	0.99986	0.50000
Comp Mole Frac (Oxygen)	0.00014	0.00014	0.00014	0.00014	0.50000
Comp Mole Frac (Nitrogen)	0.00000	0.00000	0.00000	0.00000	0.00000
Comp Mole Frac (CO2)	0.00000	0.00000	0.00000	0.00000	0.00000
Comp Mole Frac (Helium)	0.00000	0.00000	0.00000	0.00000	0.00000
Comp Mole Frac (Methane)	0.00000	0.00000	0.00000	0.00000	0.00000
Name	31	32	33	34	35
Comp Mole Frac (Hydrogen)	0.00000	0.00000	0.00000	0.00000 *	0.00000
Comp Mole Frac (H2O)	0.50000	0.99986	0.99986	0.99986 *	0.00000
Comp Mole Frac (Oxygen)	0.50000	0.00014	0.00014	0.00014 *	0.19195
Comp Mole Frac (Nitrogen)	0.00000	0.00000	0.00000	0.00000 *	0.72208
Comp Mole Frac (CO2)	0.00000	0.00000	0.00000	0.00000 *	0.00000
Comp Mole Frac (Helium)	0.00000	0.00000	0.00000	0.00000 *	0.00000
Comp Mole Frac (Methane)	0.00000	0.00000	0.00000	0.00000 *	0.08597

INL Calgary, Alberta CANADA	Case Name:	C:\Documents and Settings\mgq\Desktop\NGNP\Vary ROT\Thermal Ne
	Unit Set:	NGNP Econ
	Date/Time:	Wed Aug 18 11:23:24 2010

Workbook: Case (Main) (continued)

Composition (continued)

Name	36	37	38	39	40
Comp Mole Frac (Hydrogen)	0.00000	0.00000	0.00000	0.00000	0.00000
Comp Mole Frac (H2O)	0.17196	0.17196	0.17196	0.17196	0.17196
Comp Mole Frac (Oxygen)	0.02000	0.02000	0.02000	0.02000	0.02000
Comp Mole Frac (Nitrogen)	0.72207	0.72207	0.72207	0.72207	0.72207
Comp Mole Frac (CO2)	0.08597	0.08597	0.08597	0.08597	0.08597
Comp Mole Frac (Helium)	0.00000	0.00000	0.00000	0.00000	0.00000
Comp Mole Frac (Methane)	0.00000	0.00000	0.00000	0.00000	0.00000

Name	41	42	43	44	45
Comp Mole Frac (Hydrogen)	0.00000	0.00000	0.00000	0.00000	0.00000
Comp Mole Frac (H2O)	0.17196	0.17196	1.00000	0.17196	1.00000
Comp Mole Frac (Oxygen)	0.02000	0.02000	0.00000	0.02000	0.00000
Comp Mole Frac (Nitrogen)	0.72207	0.72207	0.00000	0.72207	0.00000
Comp Mole Frac (CO2)	0.08597	0.08597	0.00000	0.08597	0.00000
Comp Mole Frac (Helium)	0.00000	0.00000	0.00000	0.00000	0.00000
Comp Mole Frac (Methane)	0.00000	0.00000	0.00000	0.00000	0.00000

Name	46	47	48	From SG2	From SG 1
Comp Mole Frac (Hydrogen)	0.00000	0.00000 *	0.00000	0.00000	0.00000
Comp Mole Frac (H2O)	1.00000	1.00000 *	0.00000	0.00000	0.00000
Comp Mole Frac (Oxygen)	0.00000	0.00000 *	0.19195	0.00000	0.00000
Comp Mole Frac (Nitrogen)	0.00000	0.00000 *	0.72208	0.00000	0.00000
Comp Mole Frac (CO2)	0.00000	0.00000 *	0.00000	0.00000	0.00000
Comp Mole Frac (Helium)	0.00000	0.00000 *	0.00000	1.00000	1.00000
Comp Mole Frac (Methane)	0.00000	0.00000 *	0.08597	0.00000	0.00000

Name	H2/Steam	Hydrogen Product	Hydrogen Recycle	Oxygen Product	Air
Comp Mole Frac (Hydrogen)	0.70000	0.99914	0.99914	0.00000	0.00000 *
Comp Mole Frac (H2O)	0.30000	0.00086	0.00086	0.00110	0.00000 *
Comp Mole Frac (Oxygen)	0.00000	0.00000	0.00000	0.99890	0.21000 *
Comp Mole Frac (Nitrogen)	0.00000	0.00000	0.00000	0.00000	0.79000 *
Comp Mole Frac (CO2)	0.00000	0.00000	0.00000	0.00000	0.00000 *
Comp Mole Frac (Helium)	0.00000	0.00000	0.00000	0.00000	0.00000 *
Comp Mole Frac (Methane)	0.00000	0.00000	0.00000	0.00000	0.00000 *

Name	Natural Gas	RIT Goal	Steam/H2	Sweep Gas In	Sweep Gas/O2 Out
Comp Mole Frac (Hydrogen)	0.00000 *	---	0.10000	0.00000	0.00000
Comp Mole Frac (H2O)	0.00000 *	---	0.90000	0.99986	0.50000
Comp Mole Frac (Oxygen)	0.00000 *	---	0.00000	0.00014	0.50000
Comp Mole Frac (Nitrogen)	0.00000 *	---	0.00000	0.00000	0.00000
Comp Mole Frac (CO2)	0.00000 *	---	0.00000	0.00000	0.00000
Comp Mole Frac (Helium)	0.00000 *	---	0.00000	0.00000	0.00000
Comp Mole Frac (Methane)	1.00000 *	---	0.00000	0.00000	0.00000

Name	Sweep Water In	To SG1	To SG 2	Water In	
Comp Mole Frac (Hydrogen)	0.00000 *	0.00000 *	0.00000 *	0.00000 *	
Comp Mole Frac (H2O)	1.00000 *	0.00000 *	0.00000 *	1.00000 *	
Comp Mole Frac (Oxygen)	0.00000 *	0.00000 *	0.00000 *	0.00000 *	
Comp Mole Frac (Nitrogen)	0.00000 *	0.00000 *	0.00000 *	0.00000 *	
Comp Mole Frac (CO2)	0.00000 *	0.00000 *	0.00000 *	0.00000 *	
Comp Mole Frac (Helium)	0.00000 *	1.00000 *	1.00000 *	0.00000 *	
Comp Mole Frac (Methane)	0.00000 *	0.00000 *	0.00000 *	0.00000 *	

Coolers

Name		Condenser				
Duty	(kW)	1388				
Feed Temperature	(C)	46.66				
Product Temperature	(C)	37.78 *				

INL Calgary, Alberta CANADA	Case Name: C:\Documents and Settings\mgq\Desktop\NGNP\Vary ROT\Thermal Ne Unit Set: NGNP Econ Date/Time: Wed Aug 18 11:23:24 2010

Workbook: Case (Main) (continued)

Heat Exchangers

Name		Sweep Hi Temp Recu	Hi Temp Steam/H2 R	E-100	E-101	Stm Gen
Duty	(kW)	3585	1.170e+004	409.0	3876	-2036
UA	(kJ/C-h)	2.592e+005	1.156e+006	4982	4.706e+004	5.116e+004
LMTD	(C)	49.78	36.43	295.6	296.5	143.3
Minimum Approach	(C)	20.00	20.00	25.00	25.00	87.15

Heaters

Name		Reactor				
Duty	(kW)	6.000e+005 *				
Feed Temperature	(C)	290.6				
Product Temperature	(C)	650.0 *				

LNGs

Name		Low Temp Steam/H2	SG1	SG2	Sweep Low Temp Re	IHX
UA (Calculated)	(kJ/C-h)	1.603e+006	7.184e+005	2.081e+006	9.288e+005	8.593e+006
LMTD	(C)	78.84 *	34.90 *	94.91 *	89.23 *	25.00 *
Exchanger Cold Duty	(kW)	3.509e+004	6964	5.486e+004	2.302e+004	5.967e+004
Minimum Approach	(C)	25.00	25.00	25.00	25.00	25.00

Compressors

Name		Recirc	Circ1	Circ2	K-100	
Feed Pressure	(MPa)	4.800	6.860	6.860	0.1103	
Product Pressure	(MPa)	5.200	7.071	7.140	0.1379 *	
Molar Flow	(kgmole/s)	0.1562	80.37	8.986	9.630e-002	
Energy	(kW)	42.72	1.431e+004	2162	72.28	
Adiabatic Efficiency		75 *	80 *	80 *	75 *	
Polytropic Efficiency		75	80	80	76	

Expanders

Name		Steam Turbine				
Feed Pressure	(MPa)	9.700				
Product Pressure	(MPa)	1.034e-002 *				
Molar Flow	(kgmole/s)	3.383e-002				
Energy	(kW)	655.8				
Adiabatic Efficiency		80 *				
Polytropic Efficiency		76				

Pumps

Name		Water Pump	Water Recycle Pump	Sweep Pump	Sweep Water Recycl	Condenser Pump
Delta P	(MPa)	5.299	0.6000	5.299	0.6000	9.990
Energy	(kW)	118.3	6.666	6.581e-002	6.678	8.136
Feed Pressure	(MPa)	0.1013 *	4.800	0.1013 *	4.800	1.034e-002
Product Pressure	(MPa)	5.400	5.400	5.400	5.400	10.00 *
Molar Flow	(kgmole/s)	0.9349	0.4662	5.201e-004	0.4667	3.383e-002
Adiabatic Efficiency	(%)	75.00 *	75.00 *	75.00 *	75.00 *	75.00 *

Unit Ops

Operation Name	Operation Type	Feeds	Products	Ignored	Calc. Level
High Temperature Electrolys	Standard Sub-Flowsheet	Steam/H2 Sweep Gas In Process Heat 1	H2/Steam Sweep Gas/O2 Out Electrolysis Power	No	2500 *
Power Cycle	Standard Sub-Flowsheet	2	3 Electric Power Out Ql	No	2500 *
Electrolysis Input and Outpu	Spreadsheet			No	500.0 *

INL Calgary, Alberta CANADA	Case Name:	C:\Documents and Settings\mgq\Desktop\NGNP\Vary ROT\Thermal Ne
	Unit Set:	NGNP Econ
	Date/Time:	Wed Aug 18 11:23:24 2010

Workbook: Case (Main) (continued)

Unit Ops (continued)

Operation Name	Operation Type	Feeds	Products	Ignored	Calc. Level
Efficiencies	Spreadsheet			No	500.0 *
Reactor	Heater	5 Reactor Heat	1	No	500.0 *
T20	Tee	19	Hydrogen Product Hydrogen Recycle	No	500.0 *
T1	Tee	1	2 6	No	500.0 *
T2	Tee	8	To SG1 To SG 2	No	500.0 *
TEE-100	Tee	36	38 39	No	500.0 *
Steam Turbine	Expander	45	43 Steam Trbn Pwr	No	500.0 *
Sweep Hi Temp Recup	Heat Exchanger	28 Sweep Gas/O2 Out	29 30	No	500.0 *
Hi Temp Steam/H2 Recup	Heat Exchanger	15 H2/Steam	16 17	No	500.0 *
E-100	Heat Exchanger	29 39	Sweep Gas In 40	No	500.0 *
E-101	Heat Exchanger	16 38	Steam/H2 41	No	500.0 *
Stm Gen	Heat Exchanger	42 46	44 45	No	500.0 *
M12	Mixer	14 24	15	No	500.0 *
M3	Mixer	11 22	12	No	500.0 *
M4	Mixer	25 34	26	No	500.0 *
M1	Mixer	3 7	4	No	500.0 *
M2	Mixer	From SG2 From SG 1	9	No	500.0 *
M5	Mixer	Natural Gas Air	35	No	500.0 *
MIX-100	Mixer	40 41	42	No	500.0 *
Recirc	Compressor	Hydrogen Recycle Recirc Power	23	No	500.0 *
Circ1	Compressor	4 Circ1 Pwr	5	No	500.0 *
Circ2	Compressor	9 Circ2 Pwr	10	No	500.0 *
K-100	Compressor	35 Q-100	48	No	500.0 *
Condenser	Cooler	43	47 Cond Q	No	500.0 *
Low Temp Steam/H2 Recup	LNG	12 17	13 18	No	500.0 *
SG1	LNG	To SG1 27	From SG 1 28	No	500.0 *
SG2	LNG	13 To SG 2	14 From SG2	No	500.0 *
Sweep Low Temp Recup	LNG	26	27	No	500.0 *

INL Calgary, Alberta CANADA	Case Name: C:\Documents and Settings\mgq\Desktop\NGNP\Vary ROT\Thermal Ne Unit Set: NGNP Econ Date/Time: Wed Aug 18 11:23:24 2010

Workbook: Case (Main) (continued)

Unit Ops (continued)

Operation Name	Operation Type	Feeds	Products	Ignored	Calc. Level
Sweep Low Temp Recup	LNG	30	31	No	500.0 *
IHX	LNG	10	8	No	500.0 *
		6	7		
Water Pump	Pump	Water In	11	No	500.0 *
		Water Pump Power			
Water Recycle Pump	Pump	20	21	No	500.0 *
		Water Recycle Pump Power			
Sweep Pump	Pump	Sweep Water In	25	No	500.0 *
		Sweep Pump Power			
Sweep Water Recycle Pump	Pump	32	33	No	500.0 *
		Swp Rcy Pmp Pwr			
Condenser Pump	Pump	47	46	No	500.0 *
		Cond Pmp Pwr			
Water Separation Tank	Separator	18	20	No	500.0 *
		Ambient Cooling	19		
			Ambient Cooling		
Water/Oxygen Seperation T	Separator	31	32	No	500.0 *
		Ambient Cooling 2	Oxygen Product		
			Ambient Cooling 2		
RCY-1	Recycle	23	24	No	3500 *
RCY-2	Recycle	21	22	No	3500 *
RCY-3	Recycle	33	34	No	3500 *
SET-1	Set			No	500.0 *
SET-2	Set			No	500.0 *
SET-3	Set			No	500.0 *
SET-5	Set			No	500.0 *
ADJ-1	Adjust			No	3500 *
ADJ-2	Adjust			No	3500 *
ADJ-3	Adjust			No	3500 *
ADJ-4	Adjust			No	3500 *
Combustion	Conversion Reactor	48	37	No	500.0 *
			36		

Spreadsheet: Efficiencies

Units Set: NGNP

CONNECTIONS

Imported Variables

Cell	Object	Variable Description	Value
E2	Energy Stream: Reactor Heat	Heat Flow	6.000e+005 kW
E3	Energy Stream: Qh @TPL2	Heat Flow	5.546e+005 kW
E4	LNG: IHX	Exchanger Cold Duty	5.967e+004 kW
E6	Energy Stream: Electric Power Out	Power	2.494e+005 kW
E7	Energy Stream: Circ1 Pwr	Power	1.431e+004 kW
E8	Tee: T1	Flow Ratio (Flow Ratio_1)	0.8882
F2	Energy Stream: Ql	Heat Flow	3.053e+005 kW
F3	Energy Stream: Ambient Cooling	Heat Flow	-1.231e+004 kW
F4	Energy Stream: Ambient Cooling 2	Heat Flow	-1.944e+004 kW
F5	Energy Stream: Cond Q	Heat Flow	1388 kW
G2	Energy Stream: Electrolysis Power	Power	-2.319e+005 kW
G4	Energy Stream: Circ2 Pwr	Power	2162 kW
G5	Energy Stream: Water Pump Power	Power	118.3 kW
G6	Energy Stream: Water Recycle Pump Po	Power	6.666 kW

INL Calgary, Alberta CANADA	Case Name: C:\Documents and Settings\mgq\Desktop\NGNP\Vary ROT\Thermal Ne Unit Set: NGNP Econ Date/Time: Wed Aug 18 11:23:24 2010

Spreadsheet: Efficiencies (continued)

Units Set: NGNP

CONNECTIONS

Imported Variables

Cell	Object	Variable Description	Value
G7	Energy Stream: Sweep Pump Power	Power	6.581e-002 kW
G8	Energy Stream: Swp Rcy Pmp Pwr	Power	6.678 kW
G9	Energy Stream: Recirc Power	Power	42.72 kW
G10	Energy Stream: Cond Pmp Pwr	Power	8.136 kW
G11	Energy Stream: Steam Trbn Pwr	Power	655.8 kW
H5	Material Stream: Hydrogen Product	Mass Higher Heating Value	1.393e+005 kJ/kg
H6	Material Stream: Hydrogen Product	Mass Flow	1.8968 kg/s
H7	Material Stream: Natural Gas	Mass Higher Heating Value	5.515e+004 kJ/kg
H8	Material Stream: Natural Gas	Mass Flow	0.13282 kg/s
A1	Material Stream: 1	Temperature	650.00 C
C1	Energy Stream: Reactor Heat	Heat Flow	6.000e+005 kW
C2	Tee: T1	Flow Ratio (Flow Ratio_1)	0.8882
C4	Energy Stream: Electric Power Out	Power	2.494e+005 kW
C5	Energy Stream: Circ1 Pwr	Power	1.431e+004 kW

Exported Variables' Formula Results

Cell	Object	Variable Description	Value
B1	RIT Goal	Temperature	290.65 C

PARAMETERS

Exportable Variables

Cell	Visible Name	Variable Description	Variable Type	Value
A2	A2: Power	Power	Power	<empty>
A3	A3: Flow Ratio (Flow Ratio_1)	Flow Ratio (Flow Ratio_1)	---	<empty>
A4	A4: Power	Power	Power	<empty>
A5	A5: Total Electric Power Produced	Total Electric Power Produced	---	<empty>
A6	A6: Heat Flow	Heat Flow	Energy	<empty>
B1	B1: Temperature	Temperature	Temperature	290.65 C
B10	B10: Power Needed for Electrolysis	Power Needed for Electrolysis	---	<empty>
C3	C3: Heat to power production	Heat to power production	Energy	5.329e+005 kW
C6	C6:		---	0.4411
D8	D8: Electric Power for Cooling Rankine Cycle	Electric Power for Cooling Rankine Cycle	Energy	<empty>
D9	D9: Electric Power for cooling HTE	Electric Power for cooling HTE	Energy	<empty>
E5	E5: Fraction of Reactor Heat to Power Cycle	Fraction of Reactor Heat to Power Cycle	Energy	5.417e+005 kW
E9	E9: Power Available to Electrolysis	Power Available to Electrolysis	---	2.353e+005
E10	E10: Thermal Efficiency of Power Cycle	Thermal Efficiency of Power Cycle	Percent	43.43
F6	F6: Total Ambient Cooling	Total Ambient Cooling	Energy	3.384e+005 kW
F8	F8: Cooling Power for Power Cycle	Cooling Power for Power Cycle	Energy	1374 kW
F9	F9: Cooling Power for Electrolysis	Cooling Power for Electrolysis	Energy	149.0 kW
G3	G3: Circ 1 Power needed for Electrolysis	Circ 1 Power needed for Electrolysis	Power	1599 kW
G12	G12: Power Needed for Electrolysis	Power Needed for Electrolysis	---	2.353e+005
H2	H2: Excess Power	Excess Power	Energy	1.176 kW
H9	H9: Hydrogen Production Efficiency	Hydrogen Production Efficiency	Percent	43.51

User Variables

FORMULAS

Cell	Formula	Result
B1	= 0.82049516*A1 - 242.67641718	290.65 C
C3	=C2*C1	5.329e+005 kW
C6	=(C4-C5)/C3	0.4411

HYPROTECH INL Calgary, Alberta CANADA	Case Name:	C:\Documents and Settings\mgq\Desktop\NGNP\Vary ROT\Thermal Ne
	Unit Set:	NGNP Econ
	Date/Time:	Wed Aug 18 11:23:24 2010

Spreadsheet: Efficiencies (continued)

Units Set: NGNP

FORMULAS

Cell	Formula	Result
E5	=E3/(E3+E4)*E2	5.417e+005 kW
E9	=E6-E7*E8-F8	2.353e+005
E10	=E9/E5*100	43.43
F6	=F2-F3-F4+F5	3.384e+005 kW
F8	=(0.00450015022*(F2/1000)- 0.000092174537)*1000	1374 kW
F9	=(0.00450015022*((-F3-F4+F5)/1000)- 0.000092174537)*1000	149.0 kW
G3	=(1-E8)*E7	1599 kW
G12	=-G2+G3+G4+G5+G6+G7+G8+G9+G10-G11+F9	2.353e+005
H2	=E9-G12	1.176 kW
H9	=(H5*H6)/(H7*H8+E2)*100	43.51

Spreadsheet

	A	B	C	D	E	F
1	650.00 C *	290.65 C	6.000e+005 kW *		Power Cycle Efficiency *	Total Ambient Cooling *
2	<empty> *		0.8882		6.000e+005 kW *	3.053e+005 kW
3	<empty> *		5.329e+005 kW		5.546e+005 kW	-1.231e+004 kW
4	<empty> *		2.494e+005 kW		5.967e+004 kW	-1.944e+004 kW
5	<empty> *		1.431e+004 kW		5.417e+005 kW	1388 kW
6	<empty> *		0.4411		2.494e+005 kW	3.384e+005 kW
7					1.431e+004 kW	Cooling Tower Power *
8				<empty> *	0.8882	1374 kW
9				<empty> *	2.353e+005	149.0 kW
10		<empty> *			43.43	
11						
12						

	G	H
1	Needed for Electrolysis *	Excess Power *
2	-2.319e+005 kW	1.176 kW
3	1599 kW	
4	2162 kW	n Production Efficiency *
5	118.3 kW	1.393e+005 kJ/kg
6	6.666 kW	1.8968 kg/s
7	6.581e-002 kW	5.515e+004 kJ/kg
8	6.678 kW	0.13282 kg/s *
9	42.72 kW	43.51
10	8.136 kW	
11	655.8 kW	
12	2.353e+005	

Spreadsheet: Electrolysis Input and Output

Units Set: Electrolysis

CONNECTIONS

Imported Variables

Cell	Object	Variable Description	Value

Exported Variables' Formula Results

Cell	Object	Variable Description	Value

INL Calgary, Alberta CANADA	Case Name: C:\Documents and Settings\mgq\Desktop\NGNP\Vary ROT\Thermal Ne Unit Set: NGNP Econ Date/Time: Wed Aug 18 11:23:24 2010

Spreadsheet: Electrolysis Input and Output (contin

Units Set: Electrolysis

PARAMETERS

Exportable Variables

Cell	Visible Name	Variable Description	Variable Type	Value
B1	B1:		---	<empty>
B2	B2: Number of Cells	Number of Cells	---	1.146e+006
B3	B3: Cell Area	Cell Area	Small Area	225.0 cm2
B4	B4: Current Density (Amperes/cm^2)	Current Density (Amperes/cm^2)	---	0.6989
B5	B5: ASR @ 1100 K (ohms*cm^2)	ASR @ 1100 K (ohms*cm^2)	---	0.2776
B7	B7:		---	<empty>

User Variables

FORMULAS

Cell	Formula	Result

Spreadsheet

	A	B	C	D		
1		<empty> *				
2	Number of Cells *	1.146e+006 *				
3	Cell Area *	225.0 cm2 *				
4	ensity (Amperes/cm^2) *	0.6989 *				
5	@ 1100 K (ohms*cm^2) *	0.2776 *				
6						
7		<empty> *				
8						
9						
10						

Workbook: High Temperature Electrolysis (TPL1)

Streams

Name		Process In @TPL1	Sweep Gas In @TPL	Cathode @TPL1	Sweep Gas/O2 Out @	Gas Products @TPL
Vapour Fraction		1.0000	1.0000	1.0000	1.0000	1.0000
Temperature	(C)	800.00	800.00	800.00 *	800.00	800.00
Pressure	(MPa)	5.0000	5.0000	5.0000	5.0000	5.0000
Molar Flow	(kgmole/s)	1.5570	0.46719	1.5570	0.93425	2.0240
Mass Flow	(kg/s)	25.558	8.4173	10.612	23.363	25.558
Liquid Volume Flow	(m3/h)	107.2	30.36	143.6	77.66	190.9
Heat Flow	(kW)	-2.940e+005	-9.922e+004	-7.406e+004	-8.732e+004	-6.223e+004
Molar Enthalpy	(kJ/kgmole)	-1.888e+005	-2.124e+005	-4.757e+004	-9.346e+004	-3.075e+004

Name		Liquid Products @TP	Anode @TPL1	Molar Flow of Oxyger	Electrolysis Heating (	Electrode Heat @TPI
Vapour Fraction		0.0000	1.0000	---	---	---
Temperature	(C)	800.00	804.96	---	---	---
Pressure	(MPa)	5.0000	5.0000	---	---	---
Molar Flow	(kgmole/s)	0.00000	0.46706	0.46706	---	---
Mass Flow	(kg/s)	0.00000	14.946	14.946	---	---
Liquid Volume Flow	(m3/h)	0.0000	47.29	47.29	---	---
Heat Flow	(kW)	0.0000	1.191e+004	---	2.318e+005	77.03
Molar Enthalpy	(kJ/kgmole)	-2.975e+004	2.549e+004	---	---	---

INL Calgary, Alberta CANADA	Case Name: C:\Documents and Settings\mgq\Desktop\NGNP\Vary ROT\Thermal Ne Unit Set: NGNP Econ Date/Time: Wed Aug 18 11:23:24 2010

Workbook: High Temperature Electrolysis (TPL1) (continued)

Streams (continued)

Name		Process Heat @TPL	Electrolysis Power @			
Vapour Fraction		---	---			
Temperature	(C)	---	---			
Pressure	(MPa)	---	---			
Molar Flow	(kgmole/s)	---	---			
Mass Flow	(kg/s)	---	---			
Liquid Volume Flow	(m3/h)	---	---			
Heat Flow	(kW)	-9.459e-011	-2.319e+005			
Molar Enthalpy	(kJ/kgmole)	---	---			

Unit Ops

Operation Name	Operation Type	Feeds	Products	Ignored	Calc. Level
Isothermal Electrolysis @TP	Conversion Reactor	Process In @TPL1 Electrolysis Heating @TPL1	Liquid Products @TPL1 Gas Products @TPL1 Electrolysis Heating @TPL1	No	500.0 *
MIX-100 @TPL1	Mixer	Liquid Products @TPL1 Anode @TPL1 Sweep Gas In @TPL1	Sweep Gas/O2 Out @TPL1	No	500.0 *
Electrodes @TPL1	Component Splitter	Gas Products @TPL1 Electrode Heat @TPL1	Cathode @TPL1 Anode @TPL1	No	500.0 *
Gas Product Temperature @	Set			No	500.0 *
Outlet Temperature @TPL1	Set			No	500.0 *
Outlet Pressure @TPL1	Set			No	500.0 *
Inlet Temperature @TPL1	Set			No	500.0 *
High Temperature Electrolys	Spreadsheet			No	500.0 *
Temp Average ASR @TPL1	Spreadsheet			No	500.0 *
ADJ-2 @TPL1	Adjust			Yes	3500 *
ADJ-1 @TPL1	Adjust			No	3500 *

Spreadsheet: High Temperature Electrolysis @TPL1

Units Set: Electrolysis_

CONNECTIONS

Imported Variables

Cell	Object	Variable Description	Value
D2	Material Stream: Process In @TPL1	Temperature	1073.1 K
D3	Material Stream: Cathode @TPL1	Temperature	1073.2 K
A8	Material Stream: Process In @TPL1	Pressure	5.0000e+006 N/m2
E2	Material Stream: Process In @TPL1	Comp Mole Frac (H2O)	0.90000
F2	Material Stream: Process In @TPL1	Comp Mole Frac (Hydrogen)	0.10000
G2	Material Stream: Sweep Gas In @TPL1	Comp Mole Frac (Oxygen)	0.00014
E3	Material Stream: Cathode @TPL1	Comp Mole Frac (H2O)	0.30000
F3	Material Stream: Cathode @TPL1	Comp Mole Frac (Hydrogen)	0.70000
G3	Material Stream: Sweep Gas/O2 Out @TP	Comp Mole Frac (Oxygen)	0.50000
B11	SpreadSheetCell: Electrolysis Input and O	B2: Number of Cells	1.146e+006
B12	SpreadSheetCell: Electrolysis Input and O	B3: Cell Area	225.0 cm2
B13	SpreadSheetCell: Electrolysis Input and O	B4: Current Density (Amperes/cm^2)	0.6989
B16	SpreadSheetCell: Temp Average ASR@B2	B2: Temp Aver ASR	0.4000
D11	Energy Stream: Electrolysis Heating @TP	Heat Flow	2.318e+005 kW
D12	Energy Stream: Electrode Heat @TPL1	Heat Flow	77.03 kW

Exported Variables' Formula Results

Cell	Object	Variable Description	Value
B15	Molar Flow of Oxygen @TPL1	Molar Flow	467.06 gmole/s

HYPROTECH	INL Calgary, Alberta CANADA	Case Name: C:\Documents and Settings\mgq\Desktop\NGNP\Vary ROT\Thermal Ne Unit Set: NGNP Econ Date/Time: Wed Aug 18 11:23:24 2010

Spreadsheet: High Temperature Electrolysis @TPL1

Units Set: Electrolysis_

CONNECTIONS

Exported Variables' Formula Results

Cell	Object	Variable Description	Value
B19	Electrolysis Power @TPL1	Power	-2.319e+005 kW
B20	Process Heat @TPL1	Heat Flow	-9.459e-011 kW

PARAMETERS

Exportable Variables

Cell	Visible Name	Variable Description	Variable Type	Value
A1	A1: A1 for Gibbs Formation Energy	A1 for Gibbs Formation Energy	Gibbs. Coeff. CA	2.382e+005 J/gmole
A2	A2: A2 for Gibbs Formation Energy	A2 for Gibbs Formation Energy	Gibbs. Coeff. CB	39.95 J/gmole-K
A3	A3: A3 for Gibbs Formation Energy	A3 for Gibbs Formation Energy	Gibbs. Coeff. CC	3.319e-003 kJ/gmol-K
A4	A4: A4 for Gibbs Formation Energy (kJ/gmol-K^	A4 for Gibbs Formation Energy (kJ/gmol-K^3)	---	-3.532e-008
A5	A5: A5 for Gibbs Formation Energy	A5 for Gibbs Formation Energy	Gibbs. Coeff. CB	-12.85 J/gmole-K
A6	A6: Fa Faraday Number (J/Volt-gmole)	Fa Faraday Number (J/Volt-gmole)	---	9.649e+004
A7	A7: R Universal Gas Constant	R Universal Gas Constant	Entropy	8.314 J/gmole-K
A9	A9: Standard Pressure	Standard Pressure	Pressure	1.0132e+005 N/m2
B14	B14:		---	157.2
B15	B15: Molar Flow	Molar Flow	Flow	467.06 gmole/s
B17	B17:		Vapour Fraction	1.0067
B18	B18:		Vapour Fraction	1.2862
B19	B19: Power	Power	Power	-2.319e+005 kW
B20	B20: Heat Flow	Heat Flow	Energy	-9.459e-011 kW
D4	D4:		Temperature	-9.0949e-013 K
D6	D6:		Temperature	1073.1 K
D8	D8:		---	3.501e-007
D9	D9:		---	3.850e+005
E4	E4:		Vapour Fraction	-0.6000
E5	E5:		Vapour Fraction	0.3336
F4	F4:		Vapour Fraction	0.6000
F5	F5:		Vapour Fraction	-0.6194
G4	G4:		Vapour Fraction	0.4999
G5	G5:		Vapour Fraction	-0.8452
H2	H2:		---	6.803e-003
H3	H3:		---	24.67
H4	H4:		---	24.67
H5	H5:		---	54.46
I2	I2:		Molar Enthalpy	1.887e+005 J/gmole
I3	I3:		Molar Enthalpy	1.887e+005 J/gmole
I6	I6:		Molar Enthalpy	1.887e+005 J/gmole
J2	J2:		Entropy	2.321e+008 J/gmole-K
J3	J3:		Entropy	2.321e+008 J/gmole-K
K2	K2:		---	0.7607
K3	K3:		---	1.091
K6	K6:		Vapour Fraction	1.0067
K7	K7:		---	1.047

User Variables

FORMULAS

Cell	Formula	Result
B14	=B12*B13	157.2
B15	=B11*B14/(4*A6)	467.06 gmole/s
B17	@IF(@ABS(D4)<1e-3,K6,K7)	1.0067

HYPROTECH INL Calgary, Alberta CANADA	Case Name:	C:\Documents and Settings\mgq\Desktop\NGNP\Vary ROT\Thermal Ne
	Unit Set:	NGNP Econ
	Date/Time:	Wed Aug 18 11:23:24 2010

Spreadsheet: High Temperature Electrolysis @TPL1

Units Set: Electrolysis_

FORMULAS

Cell	Formula	Result
B18	=B17+B13*B16	1.2862
B19	=-B11*B18*B14/1000	-2.319e+005 kW
B20	=B19+D11+D12	-9.459e-011 kW
D4	=D2-D3	-9.0949e-013 K
D6	=(D2+D3)/2	1073.1 K
D8	=1/(2*A6*H4*F4)	3.501e-007
D9	=-1/(2*A6*H4*F4*D4)	3.850e+005
E4	=E3-E2	-0.6000
E5	=(E3*@LN(E3)-E3) - (E2*@LN(E2)-E2)	0.3336
F4	=F3-F2	0.6000
F5	=(F3*@LN(F3)-F3) - (F2*@LN(F2)-F2)	-0.6194
G4	=G3-G2	0.4999
G5	=(G3*@LN(G3)-G3) - (G2*@LN(G2)-G2)	-0.8452
H2	=G2*A8/A9	6.803e-003
H3	=G3*A8/A9	24.67
H4	=H3-H2	24.67
H5	=(H3*@LN(H3)-H3) - (H2*@LN(H2)-H2)	54.46
I2	=A1 + A2*D2+ A3*D2^2 + A4*D2^3 + A5*D2*@LN(D2)	1.887e+005 J/gmole
I3	=A1 + A2*D3+ A3*D3^2 + A4*D3^3 + A5*D3*@LN(D3)	1.887e+005 J/gmole
I6	=A1 + A2*D6+ A3*D6^2 + A4*D6^3 + A5*D6*@LN(D6)	1.887e+005 J/gmole
J2	= A1*D2 + A2/2*D2^2 + A3/3*D2^3 + A4/4*D2^4 + A5/2*D2^2*(@LN(D2)-0.5)	2.321e+008 J/gmole-K
J3	= A1*D3 + A2/2*D3^2 + A3/3*D3^3 + A4/4*D3^4 + A5/2*D3^2*(@LN(D3)-0.5)	2.321e+008 J/gmole-K
K2	=1/(2*A6)*(I2-A7*D2*@LN(E2/(F2*H2^0.5)))	0.7607
K3	=1/(2*A6)*(I3-A7*D3*@LN(E3/(F3*H3^0.5)))	1.091
K6	=D8*(I6*F4*H4 + A7*D6*((E5+F5)*H4 + H5/2*F4))	1.0067
K7	=D9*(A7/2*(D3^2-D2^2)*((E5+F5)*H4 + H5/2*F4) + F4*H4*(J3-J2))	1.047

Spreadsheet

	A	B	C	D	E	F
1	2.382e+005 J/gmole *	Gibbs Formation Energy *		Temperature *	y H2O *	h H2 *
2	39.95 J/gmole-K *	Gibbs Formation Energy *	in *	1073.1 K	0.90000	0.10000
3	.319e-003 kJ/gmol-K^2 *	Gibbs Formation Energy *	out *	1073.2 K *	0.30000	0.70000
4	-3.532e-008 *	n Energy (kJ/gmol-K^3) *	Delta *	-9.0949e-013 K	-0.6000	0.6000
5	-12.85 J/gmole-K *	Gibbs Formation Energy *	Integration Coeff *		0.3336	-0.6194
6	9.649e+004 *	Number (J/Volt-gmole) *	Average *	1073.1 K		
7	8.314 J/gmole-K *	Universal Gas Constant *				
8	5.0000e+006 N/m2	Pressure *	C isothermal *	3.501e-007		
9	1.0132e+005 N/m2 *	Standard Pressure *	C average *	3.850e+005		
10						
11	Number of Cells *	1.146e+006 *	Electrolysis Heating *	2.318e+005 kW		
12	Cell Area *	225.0 cm2 *	Electrode Heat *	77.03 kW		
13	ensity (Amperes/cm^2) *	0.6989 *				
14	Current (Amperes) *	157.2				
15	Molar Flow of Oxygen *	467.06 gmole/s				
16	Resistance (ohm*cm^2) *	0.4000 *				
17	Nernst Potential (Volts) *	1.0067				
18	perating Voltage (Volts) *	1.2862				
19	Electrolysis Power *	-2.319e+005 kW				
20	Process Heat *	-9.459e-011 kW				

	G	H	I	J	K
1	y O2 *	y A *	Delta G *	Integral Delta G dT *	Nernst Voltage *
2	0.00014	6.803e-003	1.887e+005 J/gmole	2.321e+008 J/gmole-K	0.7607
3	0.50000	24.67	1.887e+005 J/gmole	2.321e+008 J/gmole-K	1.091
4	0.4999	24.67			

	INL Calgary, Alberta CANADA		Case Name:	C:\Documents and Settings\mgq\Desktop\NGNP\Vary ROT\Thermal Ne		
			Unit Set:	NGNP Econ		
			Date/Time:	Wed Aug 18 11:23:24 2010		

Spreadsheet: High Temperature Electrolysis @TPL1

Units Set: Electrolysis_

Spreadsheet

5	-0.8452	54.46				
6			1.887e+005 J/gmole	Isothermal *	1.0067	
7				Average *	1.047	
8						
9						
10						
11						
12						
13						
14						
15						
16						
17						
18						
19						
20						

Spreadsheet: Temp Average ASR @TPL1

Units Set: Electrolysis_

CONNECTIONS

Imported Variables

Cell	Object	Variable Description	Value
B1	SpreadSheetCell: Electrolysis Input and O	B5: ASR @ 1100 K (ohms*cm^2)	0.2776
A3	Material Stream: Process In @TPL1	Temperature	1073.1 K
E15	Material Stream: Cathode @TPL1	Temperature	1073.2 K

Exported Variables' Formula Results

Cell	Object	Variable Description	Value

PARAMETERS

Exportable Variables

Cell	Visible Name	Variable Description	Variable Type	Value
A4	A4:		Temperature	1073.1 K
A5	A5:		Temperature	1073.1 K
A6	A6:		Temperature	1073.1 K
A7	A7:		Temperature	1073.1 K
A8	A8:		Temperature	1073.1 K
A9	A9:		Temperature	1073.1 K
A10	A10:		Temperature	1073.1 K
A11	A11:		Temperature	1073.1 K
A12	A12:		Temperature	1073.1 K
A13	A13:		Temperature	1073.1 K
A14	A14:		Temperature	1073.1 K
A15	A15:		Temperature	1073.1 K
A16	A16:		Temperature	1073.1 K
A17	A17:		Temperature	1073.1 K
A18	A18:		Temperature	1073.1 K
A19	A19:		Temperature	1073.1 K
A20	A20:		---	40.00
B2	B2: Temp Aver ASR	Temp Aver ASR	---	0.4000
B3	B3:		---	0.4000
B4	B4:		---	0.4000

INL Calgary, Alberta CANADA	Case Name:	C:\Documents and Settings\mgq\Desktop\NGNP\Vary ROT\Thermal Ne
	Unit Set:	NGNP Econ
	Date/Time:	Wed Aug 18 11:23:24 2010

Spreadsheet: Temp Average ASR @TPL1 (continue

Units Set: Electrolysis_

PARAMETERS

Exportable Variables

Cell	Visible Name	Variable Description	Variable Type	Value
B5	B5:		---	0.4000
B6	B6:		---	0.4000
B7	B7:		---	0.4000
B8	B8:		---	0.4000
B9	B9:		---	0.4000
B10	B10:		---	0.4000
B11	B11:		---	0.4000
B12	B12:		---	0.4000
B13	B13:		---	0.4000
B14	B14:		---	0.4000
B15	B15:		---	0.4000
B16	B16:		---	0.4000
B17	B17:		---	0.4000
B18	B18:		---	0.4000
B19	B19:		---	0.4000
B20	B20:		---	19.20
C1	C1:		Temperature	1073.1 K
C2	C2:		Temperature	1073.1 K
C3	C3:		Temperature	1073.1 K
C4	C4:		Temperature	1073.1 K
C5	C5:		Temperature	1073.1 K
C6	C6:		Temperature	1073.1 K
C7	C7:		Temperature	1073.1 K
C8	C8:		Temperature	1073.1 K
C9	C9:		Temperature	1073.1 K
C10	C10:		Temperature	1073.1 K
C11	C11:		Temperature	1073.1 K
C12	C12:		Temperature	1073.1 K
C13	C13:		Temperature	1073.1 K
C14	C14:		Temperature	1073.1 K
C15	C15:		Temperature	1073.1 K
C16	C16:		Temperature	1073.1 K
C17	C17:		Temperature	1073.1 K
C18	C18:		Temperature	1073.1 K
C19	C19:		Temperature	1073.1 K
D1	D1:		---	0.4000
D2	D2:		---	0.4000
D3	D3:		---	0.4000
D4	D4:		---	0.4000
D5	D5:		---	0.4000
D6	D6:		---	0.4000
D7	D7:		---	0.4000
D8	D8:		---	0.4000
D9	D9:		---	0.4000
D10	D10:		---	0.4000
D11	D11:		---	0.4000
D12	D12:		---	0.4000
D13	D13:		---	0.4000
D14	D14:		---	0.4000
D15	D15:		---	0.4000
D16	D16:		---	0.4000
D17	D17:		---	0.4000

INL Calgary, Alberta CANADA	Case Name:	C:\Documents and Settings\mgq\Desktop\NGNP\Vary ROT\Thermal Ne
	Unit Set:	NGNP Econ
	Date/Time:	Wed Aug 18 11:23:24 2010

Spreadsheet: Temp Average ASR @TPL1 (continuec

Units Set: Electrolysis_

PARAMETERS

Exportable Variables

Cell	Visible Name	Variable Description	Variable Type	Value
D18	D18:		---	0.4000
D19	D19:		---	0.4000
E1	E1:		Temperature	1073.1 K
E2	E2:		Temperature	1073.1 K
E3	E3:		Temperature	1073.1 K
E4	E4:		Temperature	1073.1 K
E5	E5:		Temperature	1073.1 K
E6	E6:		Temperature	1073.1 K
E7	E7:		Temperature	1073.1 K
E8	E8:		Temperature	1073.1 K
E9	E9:		Temperature	1073.1 K
E10	E10:		Temperature	1073.1 K
E11	E11:		Temperature	1073.1 K
E12	E12:		Temperature	1073.1 K
E13	E13:		Temperature	1073.1 K
E14	E14:		Temperature	1073.1 K
F1	F1:		---	0.4000
F2	F2:		---	0.4000
F3	F3:		---	0.4000
F4	F4:		---	0.4000
F5	F5:		---	0.4000
F6	F6:		---	0.4000
F7	F7:		---	0.4000
F8	F8:		---	0.4000
F9	F9:		---	0.4000
F10	F10:		---	0.4000
F11	F11:		---	0.4000
F12	F12:		---	0.4000
F13	F13:		---	0.4000
F14	F14:		---	0.4000
F15	F15:		---	0.4000
F16	F16:		Temperature	1.8190e-014 K

User Variables

FORMULAS

Cell	Formula	Result
A4	=A3+F16	1073.1 K
A5	=A4+F16	1073.1 K
A6	=A5+F16	1073.1 K
A7	=A6+F16	1073.1 K
A8	=A7+F16	1073.1 K
A9	=A8+F16	1073.1 K
A10	=A9+F16	1073.1 K
A11	=A10+F16	1073.1 K
A12	=A11+F16	1073.1 K
A13	=A12+F16	1073.1 K
A14	=A13+F16	1073.1 K
A15	=A14+F16	1073.1 K
A16	=A15+F16	1073.1 K
A17	=A16+F16	1073.1 K
A18	=A17+F16	1073.1 K

INL Calgary, Alberta CANADA	Case Name:	C:\Documents and Settings\mgq\Desktop\NGNP\Vary ROT\Thermal Ne
	Unit Set:	NGNP Econ
	Date/Time:	Wed Aug 18 11:23:24 2010

Spreadsheet: Temp Average ASR @TPL1 (continue

Units Set: Electrolysis_

FORMULAS

Cell	Formula	Result
A19	=A18+F16	1073.1 K
A20	=4*(B4+B6+B8+B10+B12+B14+B16+B18+D1+D3+D5+D7+D9+D11+D13+D15+D17+D19+F2+F4+F6+F8+F10+F12+F1	40.00
B2	@if(E15==A3,F15,(1/3*F16*(B3+A20+B20+F15))/(E15-A3))	0.4000
B3	@EXP(10300/A3)*0.00003973+(B1-0.463)	0.4000
B4	@EXP(10300/A4)*0.00003973+(B1-0.463)	0.4000
B5	@EXP(10300/A5)*0.00003973+(B1-0.463)	0.4000
B6	@EXP(10300/A6)*0.00003973+(B1-0.463)	0.4000
B7	@EXP(10300/A7)*0.00003973+(B1-0.463)	0.4000
B8	@EXP(10300/A8)*0.00003973+(B1-0.463)	0.4000
B9	@EXP(10300/A9)*0.00003973+(B1-0.463)	0.4000
B10	@EXP(10300/A10)*0.00003973+(B1-0.463)	0.4000
B11	@EXP(10300/A11)*0.00003973+(B1-0.463)	0.4000
B12	@EXP(10300/A12)*0.00003973+(B1-0.463)	0.4000
B13	@EXP(10300/A13)*0.00003973+(B1-0.463)	0.4000
B14	@EXP(10300/A14)*0.00003973+(B1-0.463)	0.4000
B15	@EXP(10300/A15)*0.00003973+(B1-0.463)	0.4000
B16	@EXP(10300/A16)*0.00003973+(B1-0.463)	0.4000
B17	@EXP(10300/A17)*0.00003973+(B1-0.463)	0.4000
B18	@EXP(10300/A18)*0.00003973+(B1-0.463)	0.4000
B19	@EXP(10300/A19)*0.00003973+(B1-0.463)	0.4000
B20	=2*(B5+B7+B9+B11+B13+B15+B17+B19+D2+D4+D6+D8+D10+D12+D14+D16+D18+F1+F3+F5+F7+F9+F11+F13)	19.20
C1	=A19+F16	1073.1 K
C2	=C1+F16	1073.1 K
C3	=C2+F16	1073.1 K
C4	=C3+F16	1073.1 K
C5	=C4+F16	1073.1 K
C6	=C5+F16	1073.1 K
C7	=C6+F16	1073.1 K
C8	=C7+F16	1073.1 K
C9	=C8+F16	1073.1 K
C10	=C9+F16	1073.1 K
C11	=C10+F16	1073.1 K
C12	=C11+F16	1073.1 K
C13	=C12+F16	1073.1 K
C14	=C13+F16	1073.1 K
C15	=C14+F16	1073.1 K
C16	=C15+F16	1073.1 K
C17	=C16+F16	1073.1 K
C18	=C17+F16	1073.1 K
C19	=C18+F16	1073.1 K
D1	@EXP(10300/C1)*0.00003973+(B1-0.463)	0.4000
D2	@EXP(10300/C2)*0.00003973+(B1-0.463)	0.4000
D3	@EXP(10300/C3)*0.00003973+(B1-0.463)	0.4000
D4	@EXP(10300/C4)*0.00003973+(B1-0.463)	0.4000
D5	@EXP(10300/C5)*0.00003973+(B1-0.463)	0.4000
D6	@EXP(10300/C6)*0.00003973+(B1-0.463)	0.4000
D7	@EXP(10300/C7)*0.00003973+(B1-0.463)	0.4000
D8	@EXP(10300/C8)*0.00003973+(B1-0.463)	0.4000
D9	@EXP(10300/C9)*0.00003973+(B1-0.463)	0.4000
D10	@EXP(10300/C10)*0.00003973+(B1-0.463)	0.4000
D11	@EXP(10300/C11)*0.00003973+(B1-0.463)	0.4000
D12	@EXP(10300/C12)*0.00003973+(B1-0.463)	0.4000
D13	@EXP(10300/C13)*0.00003973+(B1-0.463)	0.4000
D14	@EXP(10300/C14)*0.00003973+(B1-0.463)	0.4000

INL Calgary, Alberta CANADA	Case Name:	C:\Documents and Settings\mgq\Desktop\NGNP\Vary ROT\Thermal Ne
	Unit Set:	NGNP Econ
	Date/Time:	Wed Aug 18 11:23:24 2010

Spreadsheet: Temp Average ASR @TPL1 (continuec

Units Set: Electrolysis_

FORMULAS

Cell	Formula	Result
D15	@EXP(10300/C15)*0.00003973+(B1-0.463)	0.4000
D16	@EXP(10300/C16)*0.00003973+(B1-0.463)	0.4000
D17	@EXP(10300/C17)*0.00003973+(B1-0.463)	0.4000
D18	@EXP(10300/C18)*0.00003973+(B1-0.463)	0.4000
D19	@EXP(10300/C19)*0.00003973+(B1-0.463)	0.4000
E1	=C19+F16	1073.1 K
E2	=E1+F16	1073.1 K
E3	=E2+F16	1073.1 K
E4	=E3+F16	1073.1 K
E5	=E4+F16	1073.1 K
E6	=E5+F16	1073.1 K
E7	=E6+F16	1073.1 K
E8	=E7+F16	1073.1 K
E9	=E8+F16	1073.1 K
E10	=E9+F16	1073.1 K
E11	=E10+F16	1073.1 K
E12	=E11+F16	1073.1 K
E13	=E12+F16	1073.1 K
E14	=E13+F16	1073.1 K
F1	@EXP(10300/E1)*0.00003973+(B1-0.463)	0.4000
F2	@EXP(10300/E2)*0.00003973+(B1-0.463)	0.4000
F3	@EXP(10300/E3)*0.00003973+(B1-0.463)	0.4000
F4	@EXP(10300/E4)*0.00003973+(B1-0.463)	0.4000
F5	@EXP(10300/E5)*0.00003973+(B1-0.463)	0.4000
F6	@EXP(10300/E6)*0.00003973+(B1-0.463)	0.4000
F7	@EXP(10300/E7)*0.00003973+(B1-0.463)	0.4000
F8	@EXP(10300/E8)*0.00003973+(B1-0.463)	0.4000
F9	@EXP(10300/E9)*0.00003973+(B1-0.463)	0.4000
F10	@EXP(10300/E10)*0.00003973+(B1-0.463)	0.4000
F11	@EXP(10300/E11)*0.00003973+(B1-0.463)	0.4000
F12	@EXP(10300/E12)*0.00003973+(B1-0.463)	0.4000
F13	@EXP(10300/E13)*0.00003973+(B1-0.463)	0.4000
F14	@EXP(10300/E14)*0.00003973+(B1-0.463)	0.4000
F15	@EXP(10300/E15)*0.00003973+(B1-0.463)	0.4000
F16	=(E15-A3)/50	1.8190e-014 K

Spreadsheet

	A	B	C	D	E	F
1	ASR @ 1100 K *	0.2776 *	1073.1 K	0.4000	1073.1 K	0.4000
2	Temp Average ASR *	0.4000	1073.1 K	0.4000	1073.1 K	0.4000
3	1073.1 K	0.4000	1073.1 K	0.4000	1073.1 K	0.4000
4	1073.1 K	0.4000	1073.1 K	0.4000	1073.1 K	0.4000
5	1073.1 K	0.4000	1073.1 K	0.4000	1073.1 K	0.4000
6	1073.1 K	0.4000	1073.1 K	0.4000	1073.1 K	0.4000
7	1073.1 K	0.4000	1073.1 K	0.4000	1073.1 K	0.4000
8	1073.1 K	0.4000	1073.1 K	0.4000	1073.1 K	0.4000
9	1073.1 K	0.4000	1073.1 K	0.4000	1073.1 K	0.4000
10	1073.1 K	0.4000	1073.1 K	0.4000	1073.1 K	0.4000
11	1073.1 K	0.4000	1073.1 K	0.4000	1073.1 K	0.4000
12	1073.1 K	0.4000	1073.1 K	0.4000	1073.1 K	0.4000
13	1073.1 K	0.4000	1073.1 K	0.4000	1073.1 K	0.4000
14	1073.1 K	0.4000	1073.1 K	0.4000	1073.1 K	0.4000
15	1073.1 K	0.4000	1073.1 K	0.4000	1073.2 K *	0.4000
16	1073.1 K	0.4000	1073.1 K	0.4000	delta T *	1.8190e-014 K

HYPROTECH	INL Calgary, Alberta CANADA	Case Name:	C:\Documents and Settings\mgq\Desktop\NGNP\Vary ROT\Thermal Ne			
		Unit Set:	NGNP Econ			
		Date/Time:	Wed Aug 18 11:23:24 2010			

Spreadsheet: Temp Average ASR @TPL1 (continue(Units Set: Electrolysis_

Spreadsheet

17	1073.1 K	0.4000	1073.1 K	0.4000		
18	1073.1 K	0.4000	1073.1 K	0.4000		
19	1073.1 K	0.4000	1073.1 K	0.4000		
20	40.00	19.20				

Workbook: Power Cycle (TPL2)

Material Streams

Name		2 @TPL2	3 @TPL2			
Vapour Fraction		1.0000	1.0000			
Temperature	(C)	650.00	276.12			
Pressure	(MPa)	7.0000	6.8600			
Molar Flow	(kgmole/s)	71.388	71.388			
Mass Flow	(kg/s)	285.76	285.76			
Liquid Volume Flow	(m3/h)	8292	8292			
Heat Flow	(kW)	9.325e+005	3.778e+005			

Compositions

Name	2 @TPL2	3 @TPL2			
Comp Mole Frac (Hydrogen)	0.00000	0.00000			
Comp Mole Frac (H2O)	0.00000	0.00000			
Comp Mole Frac (Oxygen)	0.00000	0.00000			
Comp Mole Frac (Nitrogen)	0.00000	0.00000			
Comp Mole Frac (CO2)	0.00000	0.00000			
Comp Mole Frac (Helium)	1.00000	1.00000			
Comp Mole Frac (Methane)	0.00000	0.00000			

Energy Streams

Name		Qh @TPL2	Electric Power Out @	Ql @TPL2		
Heat Flow	(kW)	5.546e+005	2.494e+005	3.053e+005		

Unit Ops

Operation Name	Operation Type	Feeds	Products	Ignored	Calc. Level
HX @TPL2	Cooler	2 @TPL2	3 @TPL2 Qh @TPL2	No	500.0 *
SPRDSHT-1 @TPL2	Spreadsheet			No	500.0 *

Spreadsheet: SPRDSHT-1 @TPL2 Units Set: NGNP

CONNECTIONS

Imported Variables

Cell	Object	Variable Description	Value
A2	Material Stream: 2 @TPL2	Temperature	650.00 C
A6	Energy Stream: Qh @TPL2	Heat Flow	5.546e+005 kW

Exported Variables' Formula Results

Cell	Object	Variable Description	Value
A7	Electric Power Out @TPL2	Power	2.494e+005 kW
A8	Ql @TPL2	Heat Flow	3.053e+005 kW

HYPROTECH

INL
Calgary, Alberta
CANADA

Case Name:	C:\Documents and Settings\mgq\Desktop\NGNP\Vary ROT\Thermal Ne
Unit Set:	NGNP Econ
Date/Time:	Wed Aug 18 11:23:24 2010

Spreadsheet: SPRDSHT-1 @TPL2 (continued)

Units Set: NGNP

PARAMETERS

Exportable Variables

Cell	Visible Name	Variable Description	Variable Type	Value
A1	A1: Ambient Temperature	Ambient Temperature	Temperature	21.111 C
A3	A3: Carnot Efficiency	Carnot Efficiency	---	0.6812
A4	A4: Ideal factor	Ideal factor	---	0.6600
A5	A5: Power Cycle Efficiency	Power Cycle Efficiency	---	0.4496
A7	A7: Power	Power	Power	2.494e+005 kW
A8	A8: Heat Flow	Heat Flow	Energy	3.053e+005 kW

User Variables

FORMULAS

Cell	Formula	Result
A3	=(A2-A1)/(A2+273.15)	0.6812
A5	=A3*A4	0.4496
A7	=A5*A6	2.494e+005 kW
A8	=(1-A5)*A6	3.053e+005 kW

Spreadsheet

	A	B	C	D		
1	21.111 C *					
2	650.00 C					
3	0.6812					
4	0.6600 *					
5	0.4496					
6	5.546e+005 kW					
7	2.494e+005 kW					
8	3.053e+005 kW					
9						
10						

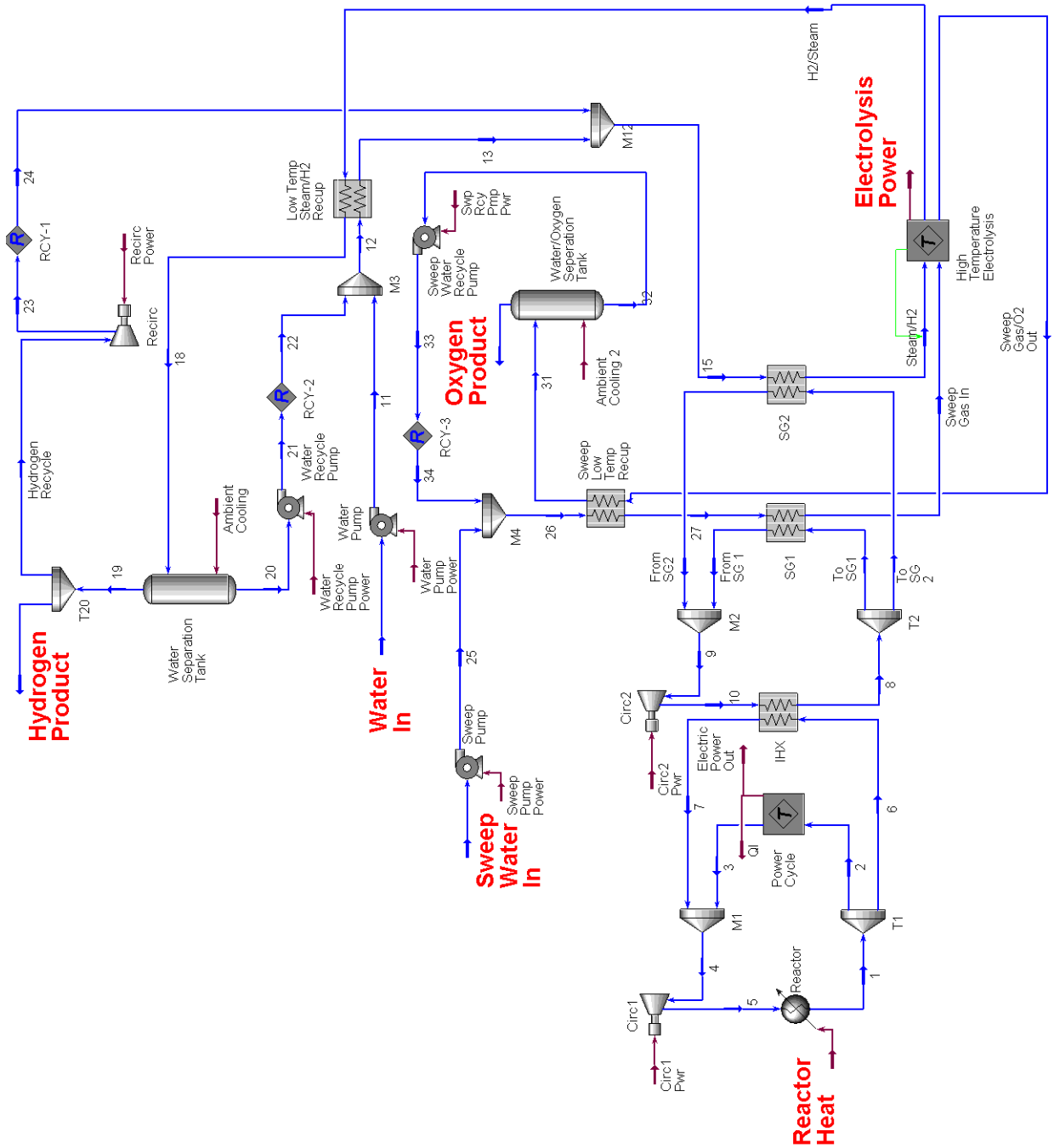

Figure B-4. Process Model of HTSE at or Above ROT of 850°C with Steam Sweep

INL Calgary, Alberta CANADA	Case Name: C:\Documents and Settings\mgq\Desktop\NGNP\Vary ROT\Thermal Ne Unit Set: NGNP Econ Date/Time: Wed Aug 18 11:41:52 2010

Workbook: Case (Main)

Streams

Name		1	2	3	4	5
Vapour Fraction		1.0000	1.0000	1.0000	1.0000	1.0000
Temperature	(C)	850.00 *	850.00	453.04	443.82 *	454.74
Pressure	(MPa)	7.0000 *	7.0000	6.8600	6.8600	7.0710
Molar Flow	(kgmole/s)	73.056	66.704	66.704	73.056	73.056
Mass Flow	(kg/s)	292.44	267.01	267.01	292.44	292.44
Liquid Volume Flow	(m3/h)	8486	7748	7748	8486	8486
Heat Flow	(kW)	1.258e+006	1.149e+006	5.982e+005	6.412e+005	6.579e+005
Molar Enthalpy	(kJ/kgmole)	1.722e+004	1.722e+004	8968	8777	9006
Name		6	7	8	9	10
Vapour Fraction		1.0000	1.0000	1.0000	1.0000	1.0000
Temperature	(C)	850.00	346.97	825.00 *	310.20	321.97
Pressure	(MPa)	7.0000	6.8600	7.0000 *	6.8600	7.1400
Molar Flow	(kgmole/s)	6.3519	6.3519	6.3538	6.3538	6.3538
Mass Flow	(kg/s)	25.427	25.427	25.434	25.434	25.434
Liquid Volume Flow	(m3/h)	737.8	737.8	738.0	738.0	738.0
Heat Flow	(kW)	1.094e+005	4.297e+004	1.061e+005	3.813e+004	3.970e+004
Molar Enthalpy	(kJ/kgmole)	1.722e+004	6765	1.670e+004	6001	6248
Name		11	12	13	15	18
Vapour Fraction		0.0000	0.0000	0.5000	0.5531	0.7461
Temperature	(C)	27.299	26.876	266.39	251.60	129.95
Pressure	(MPa)	5.2000	5.2000	5.1000	5.1000	4.9000
Molar Flow	(kgmole/s)	1.0059	1.5075	1.5075	1.6751	1.6751
Mass Flow	(kg/s)	18.122	27.158	27.158	27.498	11.417
Liquid Volume Flow	(m3/h)	65.37	97.97	97.97	115.4	154.5
Heat Flow	(kW)	-2.868e+005	-4.299e+005	-3.769e+005	-3.769e+005	-1.327e+005
Molar Enthalpy	(kJ/kgmole)	-2.851e+005	-2.852e+005	-2.500e+005	-2.250e+005	-7.922e+004
Name		19	20	21	22	23
Vapour Fraction		1.0000	0.0000	0.0000	0.0000	1.0000
Temperature	(C)	26.000	26.000 *	26.026	26.026 *	30.717
Pressure	(MPa)	4.9000	4.9000	5.2000	5.2000 *	5.1000 *
Molar Flow	(kgmole/s)	1.1736	0.50158	0.50158	0.50158 *	0.16811
Mass Flow	(kg/s)	2.3817	9.0356	9.0356	9.0356	0.34117
Liquid Volume Flow	(m3/h)	121.9	32.60	32.60	32.60	17.46
Heat Flow	(kW)	-206.6	-1.431e+005	-1.431e+005	-1.431e+005	-6.758
Molar Enthalpy	(kJ/kgmole)	-176.0	-2.852e+005	-2.852e+005	-2.852e+005	-40.20
Name		24	25	26	27	31
Vapour Fraction		1.0000	0.0000	0.0000	1.0000	0.8073
Temperature	(C)	30.717 *	27.317	27.044	449.57	203.26
Pressure	(MPa)	5.1000 *	5.4000	5.4000	5.3000	4.9000
Molar Flow	(kgmole/s)	0.16763 *	5.4620e-004	0.49945	0.49945	1.0020
Mass Flow	(kg/s)	0.34020	9.8399e-003	8.9986 *	8.9986	25.079
Liquid Volume Flow	(m3/h)	17.41	3.550e-002	32.46	32.46	83.34
Heat Flow	(kW)	-6.738	-155.7	-1.424e+005	-1.135e+005	-1.222e+005
Molar Enthalpy	(kJ/kgmole)	-40.20	-2.851e+005	-2.851e+005	-2.272e+005	-1.219e+005
Name		32	33	34	37	Ambient Cooling
Vapour Fraction		0.0000	0.0000	0.0000	---	---
Temperature	(C)	27.000	27.044	27.044 *	---	---
Pressure	(MPa)	4.9000	5.4000	5.4000 *	---	---
Molar Flow	(kgmole/s)	0.49890	0.49890	0.49890 *	---	---
Mass Flow	(kg/s)	8.9887	8.9887	8.9887	---	---
Liquid Volume Flow	(m3/h)	32.42	32.42	32.42	---	---
Heat Flow	(kW)	-1.422e+005	-1.422e+005	-1.422e+005	---	-1.057e+004
Molar Enthalpy	(kJ/kgmole)	-2.851e+005	-2.851e+005	-2.851e+005	---	---

HYPROTECH	INL Calgary, Alberta CANADA	Case Name: C:\Documents and Settings\mgq\Desktop\NGNP\Vary ROT\Thermal Ne Unit Set: NGNP Econ Date/Time: Wed Aug 18 11:41:52 2010

Workbook: Case (Main) (continued)

Streams (continued)

Name		Ambient Cooling 2	Circ1 Pwr	Circ2 Pwr	Electric Power Out	Electrolysis Power
Vapour Fraction		---	---	---	---	---
Temperature	(C)	---	---	---	---	---
Pressure	(MPa)	---	---	---	---	---
Molar Flow	(kgmole/s)	---	---	---	---	---
Mass Flow	(kg/s)	---	---	---	---	---
Liquid Volume Flow	(m3/h)	---	---	---	---	---
Heat Flow	(kW)	-2.041e+004	1.674e+004	1571	2.681e+005	-2.495e+005
Molar Enthalpy	(kJ/kgmole)	---	---	---	---	---
Name		**From SG2**	**From SG 1**	**H2/Steam**	**Hydrogen Product**	**Hydrogen Recycle**
Vapour Fraction		1.0000	1.0000	1.0000	1.0000	1.0000
Temperature	(C)	276.62	481.72	800.00	26.000	26.000
Pressure	(MPa)	6.8600	6.8600	5.0000	4.9000	4.9000
Molar Flow	(kgmole/s)	5.3135	1.0402	1.6751	1.0055	0.16811
Mass Flow	(kg/s)	21.270	4.1640	11.417	2.0406	0.34117
Liquid Volume Flow	(m3/h)	617.2	120.8	154.5	104.4	17.46
Heat Flow	(kW)	2.818e+004	9949	-7.968e+004	-177.0	-29.59
Molar Enthalpy	(kJ/kgmole)	5303	9564	-4.757e+004	-176.0	-176.0
Name		**Oxygen Product**	**Process Heat 1**	**Ql**	**Reactor Heat**	**Recirc Power**
Vapour Fraction		1.0000	---	---	---	---
Temperature	(C)	27.000 *	---	---	---	---
Pressure	(MPa)	4.9000	---	---	---	---
Molar Flow	(kgmole/s)	0.50306	---	---	---	---
Mass Flow	(kg/s)	16.090	---	---	---	---
Liquid Volume Flow	(m3/h)	50.92	---	---	---	---
Heat Flow	(kW)	-325.7	-2.183e-010	2.823e+005	6.000e+005 *	22.84
Molar Enthalpy	(kJ/kgmole)	-647.4	---	---	---	---
Name		**RIT Goal**	**Steam/H2**	**Sweep Gas In**	**Sweep Gas/O2 Out**	**Sweep Pump Power**
Vapour Fraction		---	1.0000	1.0000	1.0000	---
Temperature	(C)	454.74	800.00 *	800.00 *	800.00	---
Pressure	(MPa)	---	5.0000 *	5.0000	5.0000	---
Molar Flow	(kgmole/s)	---	1.6751	0.49945	1.0020	---
Mass Flow	(kg/s)	---	27.498 *	8.9986	25.079	---
Liquid Volume Flow	(m3/h)	---	115.4	32.46	83.34	---
Heat Flow	(kW)	---	-3.163e+005	-1.061e+005	-9.326e+004	6.911e-002
Molar Enthalpy	(kJ/kgmole)	---	-1.888e+005	-2.124e+005	-9.308e+004	---
Name		**Sweep Water In**	**Swp Rcy Pmp Pwr**	**To SG1**	**To SG 2**	**Water In**
Vapour Fraction		0.0000	---	1.0000	1.0000	0.0000
Temperature	(C)	26.850 *	---	825.00	825.00	26.850 *
Pressure	(MPa)	0.10132 *	---	7.0000	7.0000	0.10132 *
Molar Flow	(kgmole/s)	5.4620e-004	---	1.0402	5.3135	1.0059
Mass Flow	(kg/s)	9.8399e-003	---	4.1640 *	21.270 *	18.122
Liquid Volume Flow	(m3/h)	3.550e-002	---	120.8	617.2	65.37
Heat Flow	(kW)	-155.8	5.949	1.737e+004	8.873e+004	-2.870e+005
Molar Enthalpy	(kJ/kgmole)	-2.853e+005	---	1.670e+004	1.670e+004	-2.853e+005
Name		**Water Pump Power**	**Water Recycle Pump**			
Vapour Fraction		---	---			
Temperature	(C)	---	---			
Pressure	(MPa)	---	---			
Molar Flow	(kgmole/s)	---	---			
Mass Flow	(kg/s)	---	---			
Liquid Volume Flow	(m3/h)	---	---			
Heat Flow	(kW)	122.5	3.586			
Molar Enthalpy	(kJ/kgmole)	---	---			

INL Calgary, Alberta CANADA	Case Name:	C:\Documents and Settings\mgq\Desktop\NGNP\Vary ROT\Thermal Ne
	Unit Set:	NGNP Econ
	Date/Time:	Wed Aug 18 11:41:52 2010

Workbook: Case (Main) (continued)

Composition

Name	1	2	3	4	5
Comp Mole Frac (Hydrogen)	0.00000 *	0.00000	0.00000	0.00000	0.00000
Comp Mole Frac (H2O)	0.00000 *	0.00000	0.00000	0.00000	0.00000
Comp Mole Frac (Oxygen)	0.00000 *	0.00000	0.00000	0.00000	0.00000
Comp Mole Frac (Nitrogen)	0.00000 *	0.00000	0.00000	0.00000	0.00000
Comp Mole Frac (CO2)	0.00000 *	0.00000	0.00000	0.00000	0.00000
Comp Mole Frac (Argon)	0.00000 *	0.00000	0.00000	0.00000	0.00000
Comp Mole Frac (Helium)	1.00000 *	1.00000	1.00000	1.00000	1.00000
Comp Mole Frac (Methane)	0.00000 *	0.00000	0.00000	0.00000	0.00000
Comp Mole Frac (CO)	0.00000 *	0.00000	0.00000	0.00000	0.00000
Comp Mole Frac (NO)	0.00000 *	0.00000	0.00000	0.00000	0.00000
Comp Mole Frac (NO2)	0.00000 *	0.00000	0.00000	0.00000	0.00000
Comp Mole Frac (N2O)	0.00000 *	0.00000	0.00000	0.00000	0.00000
Comp Mole Frac (N2O4)	0.00000 *	0.00000	0.00000	0.00000	0.00000

Name	6	7	8	9	10
Comp Mole Frac (Hydrogen)	0.00000	0.00000	0.00000	0.00000	0.00000
Comp Mole Frac (H2O)	0.00000	0.00000	0.00000	0.00000	0.00000
Comp Mole Frac (Oxygen)	0.00000	0.00000	0.00000	0.00000	0.00000
Comp Mole Frac (Nitrogen)	0.00000	0.00000	0.00000	0.00000	0.00000
Comp Mole Frac (CO2)	0.00000	0.00000	0.00000	0.00000	0.00000
Comp Mole Frac (Argon)	0.00000	0.00000	0.00000	0.00000	0.00000
Comp Mole Frac (Helium)	1.00000	1.00000	1.00000	1.00000	1.00000
Comp Mole Frac (Methane)	0.00000	0.00000	0.00000	0.00000	0.00000
Comp Mole Frac (CO)	0.00000	0.00000	0.00000	0.00000	0.00000
Comp Mole Frac (NO)	0.00000	0.00000	0.00000	0.00000	0.00000
Comp Mole Frac (NO2)	0.00000	0.00000	0.00000	0.00000	0.00000
Comp Mole Frac (N2O)	0.00000	0.00000	0.00000	0.00000	0.00000
Comp Mole Frac (N2O4)	0.00000	0.00000	0.00000	0.00000	0.00000

Name	11	12	13	15	18
Comp Mole Frac (Hydrogen)	0.00000	0.00002	0.00002	0.10000	0.70000
Comp Mole Frac (H2O)	1.00000	0.99998	0.99998	0.90000	0.30000
Comp Mole Frac (Oxygen)	0.00000	0.00000	0.00000	0.00000	0.00000
Comp Mole Frac (Nitrogen)	0.00000	0.00000	0.00000	0.00000	0.00000
Comp Mole Frac (CO2)	0.00000	0.00000	0.00000	0.00000	0.00000
Comp Mole Frac (Argon)	0.00000	0.00000	0.00000	0.00000	0.00000
Comp Mole Frac (Helium)	0.00000	0.00000	0.00000	0.00000	0.00000
Comp Mole Frac (Methane)	0.00000	0.00000	0.00000	0.00000	0.00000
Comp Mole Frac (CO)	0.00000	0.00000	0.00000	0.00000	0.00000
Comp Mole Frac (NO)	0.00000	0.00000	0.00000	0.00000	0.00000
Comp Mole Frac (NO2)	0.00000	0.00000	0.00000	0.00000	0.00000
Comp Mole Frac (N2O)	0.00000	0.00000	0.00000	0.00000	0.00000
Comp Mole Frac (N2O4)	0.00000	0.00000	0.00000	0.00000	0.00000

* Specified by user.

INL Calgary, Alberta CANADA	Case Name: C:\Documents and Settings\mgq\Desktop\NGNP\Vary ROT\Thermal Ne Unit Set: NGNP Econ Date/Time: Wed Aug 18 11:41:52 2010

Workbook: Case (Main) (continued)

Composition (continued)

Name	19	20	21	22	23
Comp Mole Frac (Hydrogen)	0.99916	0.00005	0.00005	0.00005 *	0.99916
Comp Mole Frac (H2O)	0.00084	0.99995	0.99995	0.99995 *	0.00084
Comp Mole Frac (Oxygen)	0.00000	0.00000	0.00000	0.00000 *	0.00000
Comp Mole Frac (Nitrogen)	0.00000	0.00000	0.00000	0.00000 *	0.00000
Comp Mole Frac (CO2)	0.00000	0.00000	0.00000	0.00000 *	0.00000
Comp Mole Frac (Argon)	0.00000	0.00000	0.00000	0.00000 *	0.00000
Comp Mole Frac (Helium)	0.00000	0.00000	0.00000	0.00000 *	0.00000
Comp Mole Frac (Methane)	0.00000	0.00000	0.00000	0.00000 *	0.00000
Comp Mole Frac (CO)	0.00000	0.00000	0.00000	0.00000 *	0.00000
Comp Mole Frac (NO)	0.00000	0.00000	0.00000	0.00000 *	0.00000
Comp Mole Frac (NO2)	0.00000	0.00000	0.00000	0.00000 *	0.00000
Comp Mole Frac (N2O)	0.00000	0.00000	0.00000	0.00000 *	0.00000
Comp Mole Frac (N2O4)	0.00000	0.00000	0.00000	0.00000 *	0.00000

Name	24	25	26	27	31
Comp Mole Frac (Hydrogen)	0.99916 *	0.00000	0.00000	0.00000	0.00000
Comp Mole Frac (H2O)	0.00084 *	1.00000	0.99986	0.99986	0.49840
Comp Mole Frac (Oxygen)	0.00000 *	0.00000	0.00014	0.00014	0.50160
Comp Mole Frac (Nitrogen)	0.00000 *	0.00000	0.00000	0.00000	0.00000
Comp Mole Frac (CO2)	0.00000 *	0.00000	0.00000	0.00000	0.00000
Comp Mole Frac (Argon)	0.00000 *	0.00000	0.00000	0.00000	0.00000
Comp Mole Frac (Helium)	0.00000 *	0.00000	0.00000	0.00000	0.00000
Comp Mole Frac (Methane)	0.00000 *	0.00000	0.00000	0.00000	0.00000
Comp Mole Frac (CO)	0.00000 *	0.00000	0.00000	0.00000	0.00000
Comp Mole Frac (NO)	0.00000 *	0.00000	0.00000	0.00000	0.00000
Comp Mole Frac (NO2)	0.00000 *	0.00000	0.00000	0.00000	0.00000
Comp Mole Frac (N2O)	0.00000 *	0.00000	0.00000	0.00000	0.00000
Comp Mole Frac (N2O4)	0.00000 *	0.00000	0.00000	0.00000	0.00000

Name	32	33	34	37	From SG2
Comp Mole Frac (Hydrogen)	0.00000	0.00000	0.00000 *	---	0.00000
Comp Mole Frac (H2O)	0.99986	0.99986	0.99986 *	---	0.00000
Comp Mole Frac (Oxygen)	0.00014	0.00014	0.00014 *	---	0.00000
Comp Mole Frac (Nitrogen)	0.00000	0.00000	0.00000 *	---	0.00000
Comp Mole Frac (CO2)	0.00000	0.00000	0.00000 *	---	0.00000
Comp Mole Frac (Argon)	0.00000	0.00000	0.00000 *	---	0.00000
Comp Mole Frac (Helium)	0.00000	0.00000	0.00000 *	---	1.00000
Comp Mole Frac (Methane)	0.00000	0.00000	0.00000 *	---	0.00000
Comp Mole Frac (CO)	0.00000	0.00000	0.00000 *	---	0.00000
Comp Mole Frac (NO)	0.00000	0.00000	0.00000 *	---	0.00000
Comp Mole Frac (NO2)	0.00000	0.00000	0.00000 *	---	0.00000
Comp Mole Frac (N2O)	0.00000	0.00000	0.00000 *	---	0.00000
Comp Mole Frac (N2O4)	0.00000	0.00000	0.00000 *	---	0.00000

HYPROTECH	INL Calgary, Alberta CANADA	Case Name:	C:\Documents and Settings\mgq\Desktop\NGNP\Vary ROT\Thermal Ne
		Unit Set:	NGNP Econ
		Date/Time:	Wed Aug 18 11:41:52 2010

Workbook: Case (Main) (continued)

Composition (continued)

Name	From SG 1	H2/Steam	Hydrogen Product	Hydrogen Recycle	Oxygen Product
Comp Mole Frac (Hydrogen)	0.00000	0.70000	0.99916	0.99916	0.00000
Comp Mole Frac (H2O)	0.00000	0.30000	0.00084	0.00084	0.00109
Comp Mole Frac (Oxygen)	0.00000	0.00000	0.00000	0.00000	0.99891
Comp Mole Frac (Nitrogen)	0.00000	0.00000	0.00000	0.00000	0.00000
Comp Mole Frac (CO2)	0.00000	0.00000	0.00000	0.00000	0.00000
Comp Mole Frac (Argon)	0.00000	0.00000	0.00000	0.00000	0.00000
Comp Mole Frac (Helium)	1.00000	0.00000	0.00000	0.00000	0.00000
Comp Mole Frac (Methane)	0.00000	0.00000	0.00000	0.00000	0.00000
Comp Mole Frac (CO)	0.00000	0.00000	0.00000	0.00000	0.00000
Comp Mole Frac (NO)	0.00000	0.00000	0.00000	0.00000	0.00000
Comp Mole Frac (NO2)	0.00000	0.00000	0.00000	0.00000	0.00000
Comp Mole Frac (N2O)	0.00000	0.00000	0.00000	0.00000	0.00000
Comp Mole Frac (N2O4)	0.00000	0.00000	0.00000	0.00000	0.00000

Name	Steam/H2	Sweep Gas In	Sweep Gas/O2 Out	RIT Goal	To SG1
Comp Mole Frac (Hydrogen)	0.10000	0.00000	0.00000	---	0.00000 *
Comp Mole Frac (H2O)	0.90000	0.99986	0.49840	---	0.00000 *
Comp Mole Frac (Oxygen)	0.00000	0.00014	0.50160	---	0.00000 *
Comp Mole Frac (Nitrogen)	0.00000	0.00000	0.00000	---	0.00000 *
Comp Mole Frac (CO2)	0.00000	0.00000	0.00000	---	0.00000 *
Comp Mole Frac (Argon)	0.00000	0.00000	0.00000	---	0.00000 *
Comp Mole Frac (Helium)	0.00000	0.00000	0.00000	---	1.00000 *
Comp Mole Frac (Methane)	0.00000	0.00000	0.00000	---	0.00000 *
Comp Mole Frac (CO)	0.00000	0.00000	0.00000	---	0.00000 *
Comp Mole Frac (NO)	0.00000	0.00000	0.00000	---	0.00000 *
Comp Mole Frac (NO2)	0.00000	0.00000	0.00000	---	0.00000 *
Comp Mole Frac (N2O)	0.00000	0.00000	0.00000	---	0.00000 *
Comp Mole Frac (N2O4)	0.00000	0.00000	0.00000	---	0.00000 *

Name	Sweep Water In	To SG 2	Water In		
Comp Mole Frac (Hydrogen)	0.00000 *	0.00000 *	0.00000 *		
Comp Mole Frac (H2O)	1.00000 *	0.00000 *	1.00000 *		
Comp Mole Frac (Oxygen)	0.00000 *	0.00000 *	0.00000 *		
Comp Mole Frac (Nitrogen)	0.00000 *	0.00000 *	0.00000 *		
Comp Mole Frac (CO2)	0.00000 *	0.00000 *	0.00000 *		
Comp Mole Frac (Argon)	0.00000 *	0.00000 *	0.00000 *		
Comp Mole Frac (Helium)	0.00000 *	1.00000 *	0.00000 *		
Comp Mole Frac (Methane)	0.00000 *	0.00000 *	0.00000 *		
Comp Mole Frac (CO)	0.00000 *	0.00000 *	0.00000 *		
Comp Mole Frac (NO)	0.00000 *	0.00000 *	0.00000 *		
Comp Mole Frac (NO2)	0.00000 *	0.00000 *	0.00000 *		
Comp Mole Frac (N2O)	0.00000 *	0.00000 *	0.00000 *		
Comp Mole Frac (N2O4)	0.00000 *	0.00000 *	0.00000 *		

Coolers

Name					
Duty (kW)					
Feed Temperature (C)					
Product Temperature (C)					

Heat Exchangers

Name					
Duty (kW)					
UA (kJ/C-h)					
LMTD (C)					
Minimum Approach (C)					

HYPROTECH INL Calgary, Alberta CANADA	Case Name:	C:\Documents and Settings\mgq\Desktop\NGNP\Vary ROT\Thermal Ne
	Unit Set:	NGNP Econ
	Date/Time:	Wed Aug 18 11:41:52 2010

Workbook: Case (Main) (continued)

Heaters

Name		Reactor				
Duty	(kW)	6.000e+005 *				
Feed Temperature	(C)	454.7				
Product Temperature	(C)	850.0 *				

LNGs

Name		Low Temp Steam/H2	SG1	SG2	Sweep Low Temp Re	IHX
UA (Calculated)	(kJ/C-h)	2.542e+006	9.759e+005	2.379e+006	1.048e+006	9.564e+006
LMTD	(C)	75.08 *	27.38 *	91.63 *	99.25 *	25.00 *
Exchanger Cold Duty	(kW)	5.302e+004	7422	6.055e+004	2.890e+004	6.640e+004
Minimum Approach	(C)	25.00	25.00	25.00	25.00	24.99

Compressors

Name		Recirc	Circ1	Circ2		
Feed Pressure	(MPa)	4.900	6.860	6.860		
Product Pressure	(MPa)	5.100 *	7.071	7.140		
Molar Flow	(kgmole/s)	0.1681	73.06	6.354		
Energy	(kW)	22.84	1.674e+004	1571		
Adiabatic Efficiency		75 *	80 *	80 *		
Polytropic Efficiency		75	80	80		

Expanders

Name						
Feed Pressure	(MPa)					
Product Pressure	(MPa)					
Molar Flow	(kgmole/s)					
Energy	(kW)					
Adiabatic Efficiency						
Polytropic Efficiency						

Pumps

Name		Water Pump	Water Recycle Pump	Sweep Pump	Sweep Water Recycl	
Delta P	(MPa)	5.099	0.3000	5.299	0.5000	
Energy	(kW)	122.5	3.586	6.911e-002	5.949	
Feed Pressure	(MPa)	0.1013 *	4.900	0.1013 *	4.900	
Product Pressure	(MPa)	5.200	5.200	5.400	5.400	
Molar Flow	(kgmole/s)	1.006	0.5016	5.462e-004	0.4989	
Adiabatic Efficiency	(%)	75.00 *	75.00 *	75.00 *	75.00 *	

Unit Ops

Operation Name	Operation Type	Feeds	Products	Ignored	Calc. Level
High Temperature Electrolys	Standard Sub-Flowsheet	Steam/H2	H2/Steam	No	2500 *
		Sweep Gas In	Sweep Gas/O2 Out		
		Process Heat 1	Electrolysis Power		
Power Cycle	Standard Sub-Flowsheet	2	3	No	2500 *
			Electric Power Out		
			Ql		
Electrolysis Input and Outpu	Spreadsheet			No	500.0 *
Efficiencies	Spreadsheet			No	500.0 *
Reactor	Heater	5	1	No	500.0 *
		Reactor Heat			
T20	Tee	19	Hydrogen Product	No	500.0 *
			Hydrogen Recycle		
T1	Tee	1	2	No	500.0 *
			6		

INL
Calgary, Alberta
CANADA

Case Name:	C:\Documents and Settings\mgq\Desktop\NGNP\Vary ROT\Thermal Ne
Unit Set:	NGNP Econ
Date/Time:	Wed Aug 18 11:41:52 2010

Workbook: Case (Main) (continued)

Unit Ops (continued)

Operation Name	Operation Type	Feeds	Products	Ignored	Calc. Level
T2	Tee	8	To SG1	No	500.0 *
			To SG 2		
M12	Mixer	24	15	No	500.0 *
		13			
M3	Mixer	11	12	No	500.0 *
		22			
M4	Mixer	25	26	No	500.0 *
		34			
M1	Mixer	3	4	No	500.0 *
		7			
M2	Mixer	From SG2	9	No	500.0 *
		From SG 1			
Recirc	Compressor	Hydrogen Recycle	23	No	500.0 *
		Recirc Power			
Circ1	Compressor	4	5	No	500.0 *
		Circ1 Pwr			
Circ2	Compressor	9	10	No	500.0 *
		Circ2 Pwr			
Low Temp Steam/H2 Recup	LNG	12	13	No	500.0 *
		H2/Steam	18		
SG1	LNG	To SG1	From SG 1	No	500.0 *
		27	Sweep Gas In		
SG2	LNG	15	Steam/H2	No	500.0 *
		To SG 2	From SG2		
Sweep Low Temp Recup	LNG	26	27	No	500.0 *
		Sweep Gas/O2 Out	31		
IHX	LNG	10	8	No	500.0 *
		6	7		
Water Pump	Pump	Water In	11	No	500.0 *
		Water Pump Power			
Water Recycle Pump	Pump	20	21	No	500.0 *
		Water Recycle Pump Power			
Sweep Pump	Pump	Sweep Water In	25	No	500.0 *
		Sweep Pump Power			
Sweep Water Recycle Pump	Pump	32	33	No	500.0 *
		Swp Rcy Pmp Pwr			
Water Separation Tank	Separator	18	20	No	500.0 *
		Ambient Cooling	19		
			Ambient Cooling		
Water/Oxygen Seperation T	Separator	31	32	No	500.0 *
		Ambient Cooling 2	Oxygen Product		
			Ambient Cooling 2		
RCY-1	Recycle	23	24	No	3500 *
RCY-2	Recycle	21	22	No	3500 *
RCY-3	Recycle	33	34	No	3500 *
SET-2	Set			No	500.0 *
SET-3	Set			No	500.0 *
ADJ-2	Adjust			No	3500 *

* Specified by user.

INL Calgary, Alberta CANADA	Case Name: C:\Documents and Settings\mgq\Desktop\NGNP\Vary ROT\Thermal Ne Unit Set: NGNP Econ Date/Time: Wed Aug 18 11:41:52 2010

Spreadsheet: Efficiencies

Units Set: NGNP

CONNECTIONS

Imported Variables

Cell	Object	Variable Description	Value
A2	Material Stream: 1	Temperature	850.00 C
E2	Energy Stream: Reactor Heat	Heat Flow	6.000e+005 kW
E3	Energy Stream: Qh @TPL2	Heat Flow	5.503e+005 kW
E4	LNG: IHX	Exchanger Cold Duty	6.640e+004 kW
E6	Energy Stream: Electric Power Out	Power	2.681e+005 kW
E7	Energy Stream: Circ1 Pwr	Power	1.674e+004 kW
E8	Tee: T1	Flow Ratio (Flow Ratio_1)	0.9131
F3	Energy Stream: Ambient Cooling	Heat Flow	-1.057e+004 kW
F4	Energy Stream: Ambient Cooling 2	Heat Flow	-2.041e+004 kW
G2	Energy Stream: Electrolysis Power	Power	-2.495e+005 kW
G4	Energy Stream: Circ2 Pwr	Power	1571 kW
G5	Energy Stream: Water Pump Power	Power	122.5 kW
G6	Energy Stream: Water Recycle Pump Po	Power	3.586 kW
G7	Energy Stream: Sweep Pump Power	Power	6.911e-002 kW
G8	Energy Stream: Swp Rcy Pmp Pwr	Power	5.949 kW
G9	Energy Stream: Recirc Power	Power	22.84 kW
H5	Material Stream: Hydrogen Product	Mass Higher Heating Value	1.393e+005 kJ/kg
H6	Material Stream: Hydrogen Product	Mass Flow	2.0406 kg/s

Exported Variables' Formula Results

Cell	Object	Variable Description	Value
A1	RIT Goal	Temperature	454.74 C

PARAMETERS

Exportable Variables

Cell	Visible Name	Variable Description	Variable Type	Value
A1	A1: Temperature	Temperature	Temperature	454.74 C
A3	A3: Flow Ratio (Flow Ratio_1)	Flow Ratio (Flow Ratio_1)	---	<empty>
A4	A4: Power	Power	Power	<empty>
A5	A5: Total Electric Power Produced	Total Electric Power Produced	---	<empty>
A6	A6: Heat Flow	Heat Flow	Energy	<empty>
B10	B10: Power Needed for Electrolysis	Power Needed for Electrolysis	---	<empty>
C6	C6: Mass Flow	Mass Flow	Mass Flow	<empty>
C7	C7: Heat Flow	Heat Flow	Energy	<empty>
D8	D8: Electric Power for Cooling Rankine Cycle	Electric Power for Cooling Rankine Cycle	Energy	<empty>
D9	D9: Electric Power for cooling HTE	Electric Power for cooling HTE	Energy	<empty>
E5	E5: Fraction of Reactor Heat to Power Cycle	Fraction of Reactor Heat to Power Cycle	Energy	5.354e+005 kW
E9	E9: Power Available to Electrolysis	Power Available to Electrolysis	---	2.528e+005
E10	E10: Thermal Efficiency of Power Cycle	Thermal Efficiency of Power Cycle	Percent	47.21
F2	F2: Heat Flow	Heat Flow	Energy	0.0000 kW
F5	F5:		Energy	<empty>
F6	F6: Total Ambient Cooling	Total Ambient Cooling	Energy	3.098e+004 kW
F8	F8: Cooling Power for Power Cycle	Cooling Power for Power Cycle	Energy	0.0000 kW
F9	F9: Cooling Power for Electrolysis	Cooling Power for Electrolysis	Energy	139.3 kW
G3	G3: Circ 1 Power needed for Electrolysis	Circ 1 Power needed for Electrolysis	Power	1455 kW
G10	G10:		Power	<empty>
G11	G11:		Power	<empty>
G12	G12: Power Needed for Electrolysis	Power Needed for Electrolysis	---	2.528e+005
H2	H2: Excess Power	Excess Power	Energy	0.2093 kW
H3	H3:		---	<empty>
H7	H7:		Mass Heating Value	<empty>

INL Calgary, Alberta CANADA	Case Name: C:\Documents and Settings\mgq\Desktop\NGNP\Vary ROT\Thermal Ne Unit Set: NGNP Econ Date/Time: Wed Aug 18 11:41:52 2010

Spreadsheet: Efficiencies (continued)

Units Set: NGNP

PARAMETERS

Exportable Variables

Cell	Visible Name	Variable Description	Variable Type	Value
H8	H8:		Mass Flow	<empty>
H9	H9: Hydrogen Production Efficiency	Hydrogen Production Efficiency	Percent	47.38

User Variables

FORMULAS

Cell	Formula	Result
A1	= 0.82049516*A2 - 242.67641718	454.74 C
E5	=E3/(E3+E4)*E2	5.354e+005 kW
E9	=E6-E7*E8-F8	2.528e+005
E10	=E9/E5*100	47.21
F6	=F2-F3-F4	3.098e+004 kW
F9	=(0.00450015022*((-F3-F4)/1000)- 0.000092174537)*1000	139.3 kW
G3	=(1-E8)*E7	1455 kW
G12	=-G2+G3+G4+G5+G6+G7+G8+G9+F9	2.528e+005
H2	=E9-G12	0.2093 kW
H9	=(H5*H6)/(E2)*100	47.38

Spreadsheet

	A	B	C	D	E	F
1	454.74 C				Power Cycle Efficiency *	Total Ambient Cooling *
2	850.00 C *				6.000e+005 kW *	0.0000 kW *
3	<empty> *				5.503e+005 kW	-1.057e+004 kW
4	<empty> *				6.640e+004 kW	-2.041e+004 kW
5	<empty> *				5.354e+005 kW	<empty> *
6	<empty> *		<empty> *		2.681e+005 kW	3.098e+004 kW
7			<empty> *		1.674e+004 kW	Cooling Tower Power *
8				<empty> *	0.9131	0.0000 kW *
9				<empty> *	2.528e+005	139.3 kW
10		<empty> *			47.21	
11						
12						

	G	H
1	Needed for Electrolysis *	Excess Power *
2	-2.495e+005 kW	0.2093 kW
3	1455 kW	<empty> *
4	1571 kW	n Production Efficiency *
5	122.5 kW	1.393e+005 kJ/kg
6	3.586 kW	2.0406 kg/s
7	6.911e-002 kW	<empty> *
8	5.949 kW	<empty> *
9	22.84 kW	47.38
10	<empty> *	
11	<empty> *	
12	2.528e+005	

INL Calgary, Alberta CANADA	Case Name: C:\Documents and Settings\mgq\Desktop\NGNP\Vary ROT\Thermal Ne Unit Set: NGNP Econ Date/Time: Wed Aug 18 11:41:52 2010

Spreadsheet: Electrolysis Input and Output

Units Set: Electrolysis

CONNECTIONS

Imported Variables

Cell	Object	Variable Description	Value

Exported Variables' Formula Results

Cell	Object	Variable Description	Value

PARAMETERS

Exportable Variables

Cell	Visible Name	Variable Description	Variable Type	Value
B1	B1:		---	<empty>
B2	B2: Number of Cells	Number of Cells	---	1.234e+006
B3	B3: Cell Area	Cell Area	Small Area	225.0 cm2
B4	B4: Current Density (Amperes/cm^2)	Current Density (Amperes/cm^2)	---	0.6987
B5	B5: ASR @ 1100 K (ohms*cm^2)	ASR @ 1100 K (ohms*cm^2)	---	0.2776
B7	B7:		---	<empty>

User Variables

FORMULAS

Cell	Formula	Result

Spreadsheet

	A	B	C	D		
1		<empty> *				
2	Number of Cells *	1.234e+006 *				
3	Cell Area *	225.0 cm2 *				
4	ensity (Amperes/cm^2) *	0.6987 *				
5	@ 1100 K (ohms*cm^2) *	0.2776 *				
6						
7		<empty> *				
8						
9						
10						

Workbook: High Temperature Electrolysis (TPL1)

Streams

Name		Process In @TPL1	Sweep Gas In @TPL	Cathode @TPL1	Sweep Gas/O2 Out @	Gas Products @TPL
Vapour Fraction		1.0000	1.0000	1.0000	1.0000	1.0000
Temperature	(C)	800.00	800.00	800.00 *	800.00	800.00
Pressure	(MPa)	5.0000	5.0000	5.0000	5.0000	5.0000
Molar Flow	(kgmole/s)	1.6751	0.49945	1.6751	1.0020	2.1777
Mass Flow	(kg/s)	27.498	8.9986	11.417	25.079	27.498
Liquid Volume Flow	(m3/h)	115.4	32.46	154.5	83.34	205.4
Heat Flow	(kW)	-3.163e+005	-1.061e+005	-7.968e+004	-9.326e+004	-6.695e+004
Molar Enthalpy	(kJ/kgmole)	-1.888e+005	-2.124e+005	-4.757e+004	-9.308e+004	-3.075e+004

INL Calgary, Alberta CANADA	Case Name: C:\Documents and Settings\mgq\Desktop\NGNP\Vary ROT\Thermal Ne Unit Set: NGNP Econ Date/Time: Wed Aug 18 11:41:52 2010

Workbook: High Temperature Electrolysis (TPL1) (continued)

Streams (continued)

Name		Liquid Products @TP	Anode @TPL1	Molar Flow of Oxyger	Electrolysis Heating (	Electrode Heat @TPI
Vapour Fraction		0.0000	1.0000	---	---	---
Temperature	(C)	800.00	804.94	---	---	---
Pressure	(MPa)	5.0000	5.0000	---	---	---
Molar Flow	(kgmole/s)	0.00000	0.50251	0.50251	---	---
Mass Flow	(kg/s)	0.00000	16.080	16.080	---	---
Liquid Volume Flow	(m3/h)	0.0000	50.88	50.88	---	---
Heat Flow	(kW)	0.0000	1.281e+004	---	2.494e+005	82.59
Molar Enthalpy	(kJ/kgmole)	-3.075e+004	2.549e+004	---	---	---
Name		Process Heat @TPL1	Electrolysis Power @			
Vapour Fraction		---	---			
Temperature	(C)	---	---			
Pressure	(MPa)	---	---			
Molar Flow	(kgmole/s)	---	---			
Mass Flow	(kg/s)	---	---			
Liquid Volume Flow	(m3/h)	---	---			
Heat Flow	(kW)	-2.183e-010	-2.495e+005			
Molar Enthalpy	(kJ/kgmole)	---	---			

Unit Ops

Operation Name	Operation Type	Feeds	Products	Ignored	Calc. Level
Isothermal Electrolysis @TP	Conversion Reactor	Process In @TPL1 Electrolysis Heating @TPL1	Liquid Products @TPL1 Gas Products @TPL1 Electrolysis Heating @TPL1	No	500.0 *
MIX-100 @TPL1	Mixer	Liquid Products @TPL1 Anode @TPL1 Sweep Gas In @TPL1	Sweep Gas/O2 Out @TPL1	No	500.0 *
Electrodes @TPL1	Component Splitter	Gas Products @TPL1 Electrode Heat @TPL1	Cathode @TPL1 Anode @TPL1	No	500.0 *
Gas Product Temperature @	Set			No	500.0 *
Outlet Temperature @TPL1	Set			No	500.0 *
Outlet Pressure @TPL1	Set			No	500.0 *
Inlet Temperature @TPL1	Set			No	500.0 *
High Temperature Electrolys	Spreadsheet			No	500.0 *
Temp Average ASR @TPL1	Spreadsheet			No	500.0 *
ADJ-2 @TPL1	Adjust			Yes	3500 *
ADJ-1 @TPL1	Adjust			No	3500 *

Spreadsheet: High Temperature Electrolysis @TPL1

Units Set: Electrolysis_

CONNECTIONS

Imported Variables

Cell	Object	Variable Description	Value
D2	Material Stream: Process In @TPL1	Temperature	1073.1 K
D3	Material Stream: Cathode @TPL1	Temperature	1073.2 K
A8	Material Stream: Process In @TPL1	Pressure	5.0000e+006 N/m2
E2	Material Stream: Process In @TPL1	Comp Mole Frac (H2O)	0.90000
F2	Material Stream: Process In @TPL1	Comp Mole Frac (Hydrogen)	0.10000
G2	Material Stream: Sweep Gas In @TPL1	Comp Mole Frac (Oxygen)	0.00014
E3	Material Stream: Cathode @TPL1	Comp Mole Frac (H2O)	0.30000
F3	Material Stream: Cathode @TPL1	Comp Mole Frac (Hydrogen)	0.70000
G3	Material Stream: Sweep Gas/O2 Out @TP	Comp Mole Frac (Oxygen)	0.50160
B11	SpreadSheetCell: Electrolysis Input and O	B2: Number of Cells	1.234e+006

HYPROTECH INL Calgary, Alberta CANADA	Case Name:	C:\Documents and Settings\mgq\Desktop\NGNP\Vary ROT\Thermal Ne
	Unit Set:	NGNP Econ
	Date/Time:	Wed Aug 18 11:41:52 2010

Spreadsheet: High Temperature Electrolysis @TPL1

Units Set: Electrolysis_

CONNECTIONS

Imported Variables

Cell	Object	Variable Description	Value
B12	SpreadSheetCell: Electrolysis Input and O	B3: Cell Area	225.0 cm2
B13	SpreadSheetCell: Electrolysis Input and O	B4: Current Density (Amperes/cm^2)	0.6987
B16	SpreadSheetCell: Temp Average ASR@B2	B2: Temp Aver ASR	0.4000
D11	Energy Stream: Electrolysis Heating @TI	Heat Flow	2.494e+005 kW
D12	Energy Stream: Electrode Heat @TPL1	Heat Flow	82.59 kW

Exported Variables' Formula Results

Cell	Object	Variable Description	Value
B15	Molar Flow of Oxygen @TPL1	Molar Flow	502.51 gmole/s
B19	Electrolysis Power @TPL1	Power	-2.495e+005 kW
B20	Process Heat @TPL1	Heat Flow	-2.183e-010 kW

PARAMETERS

Exportable Variables

Cell	Visible Name	Variable Description	Variable Type	Value
A1	A1: A1 for Gibbs Formation Energy	A1 for Gibbs Formation Energy	Gibbs. Coeff. CA	2.382e+005 J/gmole
A2	A2: A2 for Gibbs Formation Energy	A2 for Gibbs Formation Energy	Gibbs. Coeff. CB	39.95 J/gmole-K
A3	A3: A3 for Gibbs Formation Energy	A3 for Gibbs Formation Energy	Gibbs. Coeff. CC	3.319e-003 kJ/gmol-K
A4	A4: A4 for Gibbs Formation Energy (kJ/gmol-K^	A4 for Gibbs Formation Energy (kJ/gmol-K^3)	---	-3.532e-008
A5	A5: A5 for Gibbs Formation Energy	A5 for Gibbs Formation Energy	Gibbs. Coeff. CB	-12.85 J/gmole-K
A6	A6: Fa Faraday Number (J/Volt-gmole)	Fa Faraday Number (J/Volt-gmole)	---	9.649e+004
A7	A7: R Universal Gas Constant	R Universal Gas Constant	Entropy	8.314 J/gmole-K
A9	A9: Standard Pressure	Standard Pressure	Pressure	1.0132e+005 N/m2
B14	B14:		---	157.2
B15	B15: Molar Flow	Molar Flow	Flow	502.51 gmole/s
B17	B17:		Vapour Fraction	1.0068
B18	B18:		Vapour Fraction	1.2862
B19	B19: Power	Power	Power	-2.495e+005 kW
B20	B20: Heat Flow	Heat Flow	Energy	-2.183e-010 kW
D4	D4:		Temperature	-2.2737e-013 K
D6	D6:		Temperature	1073.2 K
D8	D8:		---	3.490e-007
D9	D9:		---	1.535e+006
E4	E4:		Vapour Fraction	-0.6000
E5	E5:		Vapour Fraction	0.3336
F4	F4:		Vapour Fraction	0.6000
F5	F5:		Vapour Fraction	-0.6194
G4	G4:		Vapour Fraction	0.5015
G5	G5:		Vapour Fraction	-0.8463
H2	H2:		---	6.933e-003
H3	H3:		---	24.75
H4	H4:		---	24.75
H5	H5:		---	54.72
I2	I2:		Molar Enthalpy	1.887e+005 J/gmole
I3	I3:		Molar Enthalpy	1.887e+005 J/gmole
I6	I6:		Molar Enthalpy	1.887e+005 J/gmole
J2	J2:		Entropy	2.321e+008 J/gmole-K
J3	J3:		Entropy	2.321e+008 J/gmole-K
K2	K2:		---	0.7611
K3	K3:		---	1.091
K6	K6:		Vapour Fraction	1.0068

HYPROTECH INL Calgary, Alberta CANADA	Case Name:	C:\Documents and Settings\mgq\Desktop\NGNP\Vary ROT\Thermal Ne
	Unit Set:	NGNP Econ
	Date/Time:	Wed Aug 18 11:41:52 2010

Spreadsheet: High Temperature Electrolysis @TPL1

Units Set: Electrolysis_

PARAMETERS

Exportable Variables

Cell	Visible Name	Variable Description	Variable Type	Value
K7	K7:		---	1.386

User Variables

FORMULAS

Cell	Formula	Result
B14	=B12*B13	157.2
B15	=B11*B14/(4*A6)	502.51 gmole/s
B17	@IF(@ABS(D4)<1e-3,K6,K7)	1.0068
B18	=B17+B13*B16	1.2862
B19	=-B11*B18*B14/1000	-2.495e+005 kW
B20	=B19+D11+D12	-2.183e-010 kW
D4	=D2-D3	-2.2737e-013 K
D6	=(D2+D3)/2	1073.2 K
D8	=1/(2*A6*H4*F4)	3.490e-007
D9	=-1/(2*A6*H4*F4*D4)	1.535e+006
E4	=E3-E2	-0.6000
E5	=(E3*@LN(E3)-E3) - (E2*@LN(E2)-E2)	0.3336
F4	=F3-F2	0.6000
F5	=(F3*@LN(F3)-F3) - (F2*@LN(F2)-F2)	-0.6194
G4	=G3-G2	0.5015
G5	=(G3*@LN(G3)-G3) - (G2*@LN(G2)-G2)	-0.8463
H2	=G2*A8/A9	6.933e-003
H3	=G3*A8/A9	24.75
H4	=H3-H2	24.75
H5	=(H3*@LN(H3)-H3) - (H2*@LN(H2)-H2)	54.72
I2	=A1 + A2*D2+ A3*D2^2 + A4*D2^3 + A5*D2*@LN(D2)	1.887e+005 J/gmole
I3	=A1 + A2*D3+ A3*D3^2 + A4*D3^3 + A5*D3*@LN(D3)	1.887e+005 J/gmole
I6	=A1 + A2*D6+ A3*D6^2 + A4*D6^3 + A5*D6*@LN(D6)	1.887e+005 J/gmole
J2	= A1*D2 + A2/2*D2^2 + A3/3*D2^3 + A4/4*D2^4 + A5/2*D2^2*(@LN(D2)-0.5)	2.321e+008 J/gmole-K
J3	= A1*D3 + A2/2*D3^2 + A3/3*D3^3 + A4/4*D3^4 + A5/2*D3^2*(@LN(D3)-0.5)	2.321e+008 J/gmole-K
K2	=1/(2*A6)*(I2-A7*D2*@LN(E2/(F2*H2^0.5)))	0.7611
K3	=1/(2*A6)*(I3-A7*D3*@LN(E3/(F3*H3^0.5)))	1.091
K6	=D8*(I6*F4*H4 + A7*D6*((E5+F5)*H4 + H5/2*F4))	1.0068
K7	=D9*(A7/2*(D3^2-D2^2)*((E5+F5)*H4 + H5/2*F4) + F4*H4*(J3-J2))	1.386

Spreadsheet

	A	B	C	D	E	F
1	2.382e+005 J/gmole *	Gibbs Formation Energy *		Temperature *	y H2O *	h H2 *
2	39.95 J/gmole-K *	Gibbs Formation Energy *	in *	1073.1 K	0.90000	0.10000
3	.319e-003 kJ/gmol-K^2 *	Gibbs Formation Energy *	out *	1073.2 K *	0.30000	0.70000
4	-3.532e-008 *	n Energy (kJ/gmol-K^3) *	Delta *	-2.2737e-013 K	-0.6000	0.6000
5	-12.85 J/gmole-K *	Gibbs Formation Energy *	Integration Coeff *		0.3336	-0.6194
6	9.649e+004 *	Number (J/Volt-gmole) *	Average *	1073.2 K		
7	8.314 J/gmole-K *	Universal Gas Constant *				
8	5.0000e+006 N/m2	Pressure *	C isothermal *	3.490e-007		
9	1.0132e+005 N/m2 *	Standard Pressure *	C average *	1.535e+006		
10						
11	Number of Cells *	1.234e+006 *	Electrolysis Heating *	2.494e+005 kW		
12	Cell Area *	225.0 cm2 *	Electrode Heat *	82.59 kW		
13	ensity (Amperes/cm^2) *	0.6987 *				
14	Current (Amperes) *	157.2				

HYPROTECH INL Calgary, Alberta CANADA	Case Name:	C:\Documents and Settings\mgq\Desktop\NGNP\Vary ROT\Thermal Ne
	Unit Set:	NGNP Econ
	Date/Time:	Wed Aug 18 11:41:52 2010

Spreadsheet: High Temperature Electrolysis @TPL1

Units Set: Electrolysis_

Spreadsheet

15	Molar Flow of Oxygen *	502.51 gmole/s	
16	Resistance (ohm*cm^2) *	0.4000 *	
17	Nernst Potential (Volts) *	1.0068	
18	perating Voltage (Volts) *	1.2862	
19	Electrolysis Power *	-2.495e+005 kW	
20	Process Heat *	-2.183e-010 kW	

	G	H	I	J	K
1	y O2 *	y A *	Delta G *	Integral Delta G dT *	Nernst Voltage *
2	0.00014	6.933e-003	1.887e+005 J/gmole	2.321e+008 J/gmole-K	0.7611
3	0.50160	24.75	1.887e+005 J/gmole	2.321e+008 J/gmole-K	1.091
4	0.5015	24.75			
5	-0.8463	54.72			
6			1.887e+005 J/gmole	Isothermal *	1.0068
7				Average *	1.386
8					
9					
10					
11					
12					
13					
14					
15					
16					
17					
18					
19					
20					

Spreadsheet: Temp Average ASR @TPL1

Units Set: Electrolysis_

CONNECTIONS

Imported Variables

Cell	Object	Variable Description	Value
B1	SpreadSheetCell: Electrolysis Input and O	B5: ASR @ 1100 K (ohms*cm^2)	0.2776
A3	Material Stream: Process In @TPL1	Temperature	1073.1 K
E15	Material Stream: Cathode @TPL1	Temperature	1073.2 K

Exported Variables' Formula Results

Cell	Object	Variable Description	Value

PARAMETERS

Exportable Variables

Cell	Visible Name	Variable Description	Variable Type	Value
A4	A4:		Temperature	1073.1 K
A5	A5:		Temperature	1073.1 K
A6	A6:		Temperature	1073.1 K
A7	A7:		Temperature	1073.1 K
A8	A8:		Temperature	1073.1 K
A9	A9:		Temperature	1073.1 K
A10	A10:		Temperature	1073.1 K
A11	A11:		Temperature	1073.1 K
A12	A12:		Temperature	1073.1 K

INL
Calgary, Alberta
CANADA

Case Name:	C:\Documents and Settings\mgq\Desktop\NGNP\Vary ROT\Thermal Ne
Unit Set:	NGNP Econ
Date/Time:	Wed Aug 18 11:41:52 2010

Spreadsheet: Temp Average ASR @TPL1 (continue

Units Set: Electrolysis_

PARAMETERS

Exportable Variables

Cell	Visible Name	Variable Description	Variable Type	Value
A13	A13:		Temperature	1073.1 K
A14	A14:		Temperature	1073.1 K
A15	A15:		Temperature	1073.1 K
A16	A16:		Temperature	1073.1 K
A17	A17:		Temperature	1073.1 K
A18	A18:		Temperature	1073.1 K
A19	A19:		Temperature	1073.1 K
A20	A20:		---	40.00
B2	B2: Temp Aver ASR	Temp Aver ASR	---	0.4000
B3	B3:		---	0.4000
B4	B4:		---	0.4000
B5	B5:		---	0.4000
B6	B6:		---	0.4000
B7	B7:		---	0.4000
B8	B8:		---	0.4000
B9	B9:		---	0.4000
B10	B10:		---	0.4000
B11	B11:		---	0.4000
B12	B12:		---	0.4000
B13	B13:		---	0.4000
B14	B14:		---	0.4000
B15	B15:		---	0.4000
B16	B16:		---	0.4000
B17	B17:		---	0.4000
B18	B18:		---	0.4000
B19	B19:		---	0.4000
B20	B20:		---	19.20
C1	C1:		Temperature	1073.1 K
C2	C2:		Temperature	1073.1 K
C3	C3:		Temperature	1073.1 K
C4	C4:		Temperature	1073.1 K
C5	C5:		Temperature	1073.1 K
C6	C6:		Temperature	1073.1 K
C7	C7:		Temperature	1073.1 K
C8	C8:		Temperature	1073.1 K
C9	C9:		Temperature	1073.1 K
C10	C10:		Temperature	1073.1 K
C11	C11:		Temperature	1073.1 K
C12	C12:		Temperature	1073.1 K
C13	C13:		Temperature	1073.1 K
C14	C14:		Temperature	1073.1 K
C15	C15:		Temperature	1073.1 K
C16	C16:		Temperature	1073.1 K
C17	C17:		Temperature	1073.1 K
C18	C18:		Temperature	1073.1 K
C19	C19:		Temperature	1073.1 K
D1	D1:		---	0.4000
D2	D2:		---	0.4000
D3	D3:		---	0.4000
D4	D4:		---	0.4000
D5	D5:		---	0.4000
D6	D6:		---	0.4000

INL Calgary, Alberta CANADA	Case Name:	C:\Documents and Settings\mgq\Desktop\NGNP\Vary ROT\Thermal Ne
	Unit Set:	NGNP Econ
	Date/Time:	Wed Aug 18 11:41:52 2010

Spreadsheet: Temp Average ASR @TPL1 (continuec

Units Set: Electrolysis_

PARAMETERS

Exportable Variables

Cell	Visible Name	Variable Description	Variable Type	Value
D7	D7:		---	0.4000
D8	D8:		---	0.4000
D9	D9:		---	0.4000
D10	D10:		---	0.4000
D11	D11:		---	0.4000
D12	D12:		---	0.4000
D13	D13:		---	0.4000
D14	D14:		---	0.4000
D15	D15:		---	0.4000
D16	D16:		---	0.4000
D17	D17:		---	0.4000
D18	D18:		---	0.4000
D19	D19:		---	0.4000
E1	E1:		Temperature	1073.1 K
E2	E2:		Temperature	1073.1 K
E3	E3:		Temperature	1073.1 K
E4	E4:		Temperature	1073.1 K
E5	E5:		Temperature	1073.1 K
E6	E6:		Temperature	1073.1 K
E7	E7:		Temperature	1073.1 K
E8	E8:		Temperature	1073.1 K
E9	E9:		Temperature	1073.1 K
E10	E10:		Temperature	1073.1 K
E11	E11:		Temperature	1073.1 K
E12	E12:		Temperature	1073.1 K
E13	E13:		Temperature	1073.1 K
E14	E14:		Temperature	1073.1 K
F1	F1:		---	0.4000
F2	F2:		---	0.4000
F3	F3:		---	0.4000
F4	F4:		---	0.4000
F5	F5:		---	0.4000
F6	F6:		---	0.4000
F7	F7:		---	0.4000
F8	F8:		---	0.4000
F9	F9:		---	0.4000
F10	F10:		---	0.4000
F11	F11:		---	0.4000
F12	F12:		---	0.4000
F13	F13:		---	0.4000
F14	F14:		---	0.4000
F15	F15:		---	0.4000
F16	F16:		Temperature	4.5475e-015 K

User Variables

FORMULAS

Cell	Formula	Result
A4	=A3+F16	1073.1 K
A5	=A4+F16	1073.1 K
A6	=A5+F16	1073.1 K
A7	=A6+F16	1073.1 K

INL Calgary, Alberta CANADA	Case Name:	C:\Documents and Settings\mgq\Desktop\NGNP\Vary ROT\Thermal Ne
	Unit Set:	NGNP Econ
	Date/Time:	Wed Aug 18 11:41:52 2010

Spreadsheet: Temp Average ASR @TPL1 (continue

Units Set: Electrolysis_

FORMULAS

Cell	Formula	Result
A8	=A7+F16	1073.1 K
A9	=A8+F16	1073.1 K
A10	=A9+F16	1073.1 K
A11	=A10+F16	1073.1 K
A12	=A11+F16	1073.1 K
A13	=A12+F16	1073.1 K
A14	=A13+F16	1073.1 K
A15	=A14+F16	1073.1 K
A16	=A15+F16	1073.1 K
A17	=A16+F16	1073.1 K
A18	=A17+F16	1073.1 K
A19	=A18+F16	1073.1 K
A20	=4*(B4+B6+B8+B10+B12+B14+B16+B18+D1+D3+D5+D7+D9+D11+D13+D15+D17+D19+F2+F4+F6+F8+F10+F12+F1	40.00
B2	@if(E15==A3,F15,(1/3*F16*(B3+A20+B20+F15))/(E15-A3))	0.4000
B3	@EXP(10300/A3)*0.00003973+(B1-0.463)	0.4000
B4	@EXP(10300/A4)*0.00003973+(B1-0.463)	0.4000
B5	@EXP(10300/A5)*0.00003973+(B1-0.463)	0.4000
B6	@EXP(10300/A6)*0.00003973+(B1-0.463)	0.4000
B7	@EXP(10300/A7)*0.00003973+(B1-0.463)	0.4000
B8	@EXP(10300/A8)*0.00003973+(B1-0.463)	0.4000
B9	@EXP(10300/A9)*0.00003973+(B1-0.463)	0.4000
B10	@EXP(10300/A10)*0.00003973+(B1-0.463)	0.4000
B11	@EXP(10300/A11)*0.00003973+(B1-0.463)	0.4000
B12	@EXP(10300/A12)*0.00003973+(B1-0.463)	0.4000
B13	@EXP(10300/A13)*0.00003973+(B1-0.463)	0.4000
B14	@EXP(10300/A14)*0.00003973+(B1-0.463)	0.4000
B15	@EXP(10300/A15)*0.00003973+(B1-0.463)	0.4000
B16	@EXP(10300/A16)*0.00003973+(B1-0.463)	0.4000
B17	@EXP(10300/A17)*0.00003973+(B1-0.463)	0.4000
B18	@EXP(10300/A18)*0.00003973+(B1-0.463)	0.4000
B19	@EXP(10300/A19)*0.00003973+(B1-0.463)	0.4000
B20	=2*(B5+B7+B9+B11+B13+B15+B17+B19+D2+D4+D6+D8+D10+D12+D14+D16+D18+F1+F3+F5+F7+F9+F11+F13)	19.20
C1	=A19+F16	1073.1 K
C2	=C1+F16	1073.1 K
C3	=C2+F16	1073.1 K
C4	=C3+F16	1073.1 K
C5	=C4+F16	1073.1 K
C6	=C5+F16	1073.1 K
C7	=C6+F16	1073.1 K
C8	=C7+F16	1073.1 K
C9	=C8+F16	1073.1 K
C10	=C9+F16	1073.1 K
C11	=C10+F16	1073.1 K
C12	=C11+F16	1073.1 K
C13	=C12+F16	1073.1 K
C14	=C13+F16	1073.1 K
C15	=C14+F16	1073.1 K
C16	=C15+F16	1073.1 K
C17	=C16+F16	1073.1 K
C18	=C17+F16	1073.1 K
C19	=C18+F16	1073.1 K
D1	@EXP(10300/C1)*0.00003973+(B1-0.463)	0.4000
D2	@EXP(10300/C2)*0.00003973+(B1-0.463)	0.4000
D3	@EXP(10300/C3)*0.00003973+(B1-0.463)	0.4000

HYPROTECH INL Calgary, Alberta CANADA	Case Name:	C:\Documents and Settings\mgq\Desktop\NGNP\Vary ROT\Thermal Ne
	Unit Set:	NGNP Econ
	Date/Time:	Wed Aug 18 11:41:52 2010

Spreadsheet: Temp Average ASR @TPL1 (continuec

Units Set: Electrolysis_

FORMULAS

Cell	Formula	Result
D4	@EXP(10300/C4)*0.00003973+(B1-0.463)	0.4000
D5	@EXP(10300/C5)*0.00003973+(B1-0.463)	0.4000
D6	@EXP(10300/C6)*0.00003973+(B1-0.463)	0.4000
D7	@EXP(10300/C7)*0.00003973+(B1-0.463)	0.4000
D8	@EXP(10300/C8)*0.00003973+(B1-0.463)	0.4000
D9	@EXP(10300/C9)*0.00003973+(B1-0.463)	0.4000
D10	@EXP(10300/C10)*0.00003973+(B1-0.463)	0.4000
D11	@EXP(10300/C11)*0.00003973+(B1-0.463)	0.4000
D12	@EXP(10300/C12)*0.00003973+(B1-0.463)	0.4000
D13	@EXP(10300/C13)*0.00003973+(B1-0.463)	0.4000
D14	@EXP(10300/C14)*0.00003973+(B1-0.463)	0.4000
D15	@EXP(10300/C15)*0.00003973+(B1-0.463)	0.4000
D16	@EXP(10300/C16)*0.00003973+(B1-0.463)	0.4000
D17	@EXP(10300/C17)*0.00003973+(B1-0.463)	0.4000
D18	@EXP(10300/C18)*0.00003973+(B1-0.463)	0.4000
D19	@EXP(10300/C19)*0.00003973+(B1-0.463)	0.4000
E1	=C19+F16	1073.1 K
E2	=E1+F16	1073.1 K
E3	=E2+F16	1073.1 K
E4	=E3+F16	1073.1 K
E5	=E4+F16	1073.1 K
E6	=E5+F16	1073.1 K
E7	=E6+F16	1073.1 K
E8	=E7+F16	1073.1 K
E9	=E8+F16	1073.1 K
E10	=E9+F16	1073.1 K
E11	=E10+F16	1073.1 K
E12	=E11+F16	1073.1 K
E13	=E12+F16	1073.1 K
E14	=E13+F16	1073.1 K
F1	@EXP(10300/E1)*0.00003973+(B1-0.463)	0.4000
F2	@EXP(10300/E2)*0.00003973+(B1-0.463)	0.4000
F3	@EXP(10300/E3)*0.00003973+(B1-0.463)	0.4000
F4	@EXP(10300/E4)*0.00003973+(B1-0.463)	0.4000
F5	@EXP(10300/E5)*0.00003973+(B1-0.463)	0.4000
F6	@EXP(10300/E6)*0.00003973+(B1-0.463)	0.4000
F7	@EXP(10300/E7)*0.00003973+(B1-0.463)	0.4000
F8	@EXP(10300/E8)*0.00003973+(B1-0.463)	0.4000
F9	@EXP(10300/E9)*0.00003973+(B1-0.463)	0.4000
F10	@EXP(10300/E10)*0.00003973+(B1-0.463)	0.4000
F11	@EXP(10300/E11)*0.00003973+(B1-0.463)	0.4000
F12	@EXP(10300/E12)*0.00003973+(B1-0.463)	0.4000
F13	@EXP(10300/E13)*0.00003973+(B1-0.463)	0.4000
F14	@EXP(10300/E14)*0.00003973+(B1-0.463)	0.4000
F15	@EXP(10300/E15)*0.00003973+(B1-0.463)	0.4000
F16	=(E15-A3)/50	4.5475e-015 K

Spreadsheet

	A	B	C	D	E	F
1	ASR @ 1100 K *	0.2776 *	1073.1 K	0.4000	1073.1 K	0.4000
2	Temp Average ASR *	0.4000	1073.1 K	0.4000	1073.1 K	0.4000
3	1073.1 K	0.4000	1073.1 K	0.4000	1073.1 K	0.4000
4	1073.1 K	0.4000	1073.1 K	0.4000	1073.1 K	0.4000
5	1073.1 K	0.4000	1073.1 K	0.4000	1073.1 K	0.4000

* Specified by user.

HYPROTECH INL Calgary, Alberta CANADA	Case Name:	C:\Documents and Settings\mgq\Desktop\NGNP\Vary ROT\Thermal Ne
	Unit Set:	NGNP Econ
	Date/Time:	Wed Aug 18 11:41:52 2010

Spreadsheet: Temp Average ASR @TPL1 (continue

Units Set: Electrolysis

Spreadsheet

6	1073.1 K	0.4000	1073.1 K	0.4000	1073.1 K	0.4000
7	1073.1 K	0.4000	1073.1 K	0.4000	1073.1 K	0.4000
8	1073.1 K	0.4000	1073.1 K	0.4000	1073.1 K	0.4000
9	1073.1 K	0.4000	1073.1 K	0.4000	1073.1 K	0.4000
10	1073.1 K	0.4000	1073.1 K	0.4000	1073.1 K	0.4000
11	1073.1 K	0.4000	1073.1 K	0.4000	1073.1 K	0.4000
12	1073.1 K	0.4000	1073.1 K	0.4000	1073.1 K	0.4000
13	1073.1 K	0.4000	1073.1 K	0.4000	1073.1 K	0.4000
14	1073.1 K	0.4000	1073.1 K	0.4000	1073.1 K	0.4000
15	1073.1 K	0.4000	1073.1 K	0.4000	1073.2 K *	0.4000
16	1073.1 K	0.4000	1073.1 K	0.4000	delta T *	4.5475e-015 K
17	1073.1 K	0.4000	1073.1 K	0.4000		
18	1073.1 K	0.4000	1073.1 K	0.4000		
19	1073.1 K	0.4000	1073.1 K	0.4000		
20	40.00	19.20				

Workbook: Power Cycle (TPL2)

Material Streams

Name		2 @TPL2	3 @TPL2			
Vapour Fraction		1.0000	1.0000			
Temperature	(C)	850.00	453.04			
Pressure	(MPa)	7.0000	6.8600			
Molar Flow	(kgmole/s)	66.704	66.704			
Mass Flow	(kg/s)	267.01	267.01			
Liquid Volume Flow	(m3/h)	7748	7748			
Heat Flow	(kW)	1.149e+006	5.982e+005			

Compositions

Name	2 @TPL2	3 @TPL2			
Comp Mole Frac (H2O)	0.00000	0.00000			
Comp Mole Frac (Helium)	1.00000	1.00000			

Energy Streams

Name		Qh @TPL2	Electric Power Out @	Ql @TPL2		
Heat Flow	(kW)	5.503e+005	2.681e+005	2.823e+005		

Unit Ops

Operation Name	Operation Type	Feeds	Products	Ignored	Calc. Level
HX @TPL2	Cooler	2 @TPL2	3 @TPL2 Qh @TPL2	No	500.0 *
SPRDSHT-1 @TPL2	Spreadsheet			No	500.0 *

Spreadsheet: SPRDSHT-1 @TPL2

Units Set: NGNP

CONNECTIONS

Imported Variables

Cell	Object	Variable Description	Value
A2	Material Stream: 2 @TPL2	Temperature	850.00 C
A6	Energy Stream: Qh @TPL2	Heat Flow	5.503e+005 kW

INL Calgary, Alberta CANADA	Case Name: C:\Documents and Settings\mgq\Desktop\NGNP\Vary ROT\Thermal Ne Unit Set: NGNP Econ Date/Time: Wed Aug 18 11:41:52 2010

Spreadsheet: SPRDSHT-1 @TPL2 (continued)

Units Set: NGNP

CONNECTIONS

Exported Variables' Formula Results

Cell	Object	Variable Description	Value
A7	Electric Power Out @TPL2	Power	2.681e+005 kW
A8	Ql @TPL2	Heat Flow	2.823e+005 kW

PARAMETERS

Exportable Variables

Cell	Visible Name	Variable Description	Variable Type	Value
A1	A1: Ambient Temperature	Ambient Temperature	Temperature	21.111 C
A3	A3: Carnot Efficiency	Carnot Efficiency	---	0.7380
A4	A4: Ideal factor	Ideal factor	---	0.6600
A5	A5: Power Cycle Efficiency	Power Cycle Efficiency	---	0.4871
A7	A7: Power	Power	Power	2.681e+005 kW
A8	A8: Heat Flow	Heat Flow	Energy	2.823e+005 kW

User Variables

FORMULAS

Cell	Formula	Result
A3	=(A2-A1)/(A2+273.15)	0.7380
A5	=A3*A4	0.4871
A7	=A5*A6	2.681e+005 kW
A8	=(1-A5)*A6	2.823e+005 kW

Spreadsheet

	A	B	C	D		
1	21.111 C *					
2	850.00 C					
3	0.7380					
4	0.6600 *					
5	0.4871					
6	5.503e+005 kW					
7	2.681e+005 kW					
8	2.823e+005 kW					
9						
10						

B-2 HTSE with Air Sweep

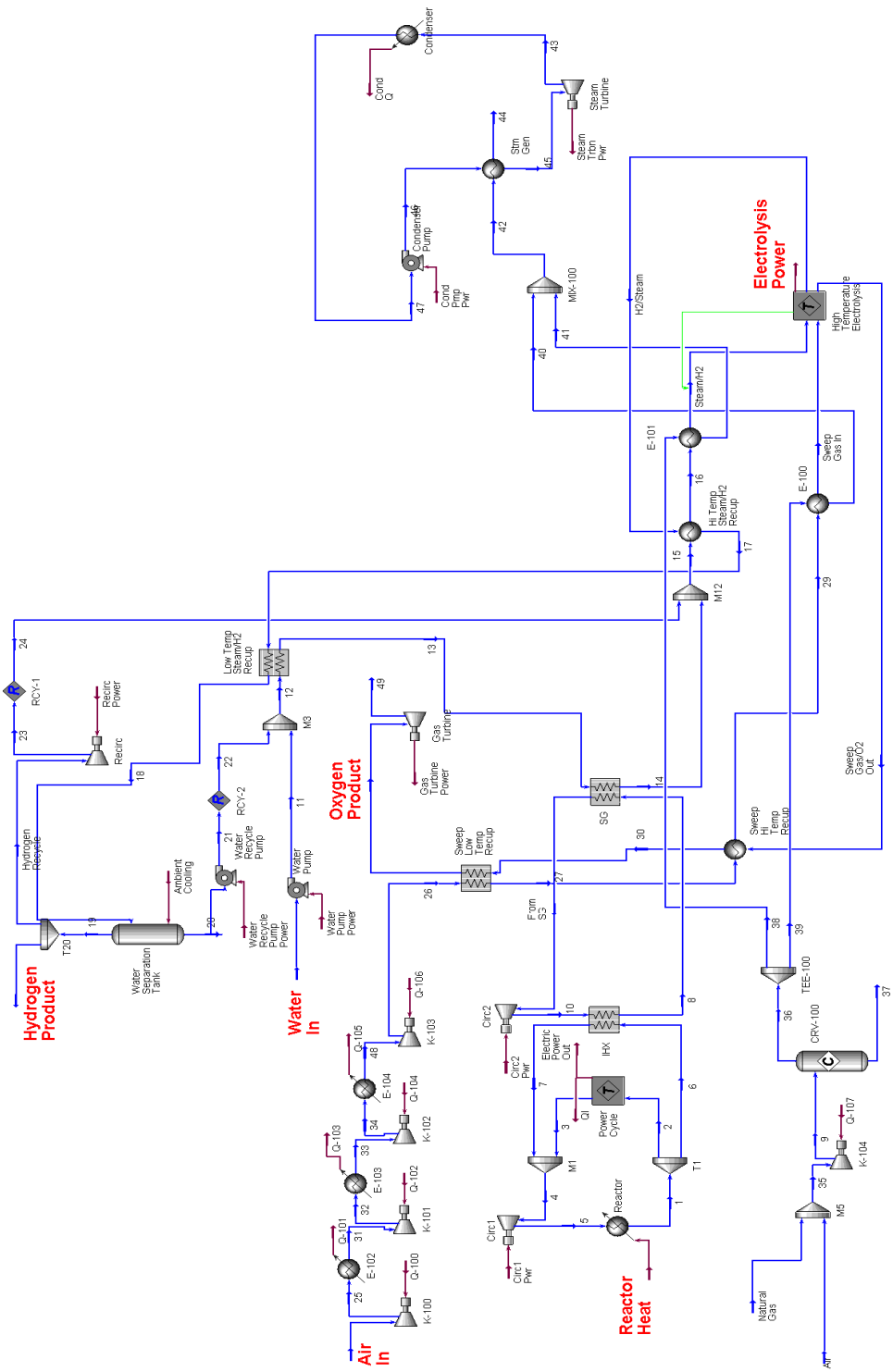

Figure B-5. Process Model of HTSE Below ROT of 850°C with Air Sweep.

HYPROTECH	INL Calgary, Alberta CANADA	Case Name: C:\Documents and Settings\mgq\Desktop\NGNP\Vary ROT\Thermal Ne Unit Set: NGNP Econ Date/Time: Wed Aug 18 11:57:30 2010

Workbook: Case (Main)

Streams

Name		1	2	3	8	4
Vapour Fraction		1.0000	1.0000	1.0000	1.0000	1.0000
Temperature	(C)	650.00 *	650.00	276.73	625.00 *	282.18 *
Pressure	(MPa)	7.0000 *	7.0000	6.8600	7.0000 *	6.8600
Molar Flow	(kgmole/s)	80.370	72.210	72.210	8.1639	80.370
Mass Flow	(kg/s)	321.72	289.05	289.05	32.680 *	321.72
Liquid Volume Flow	(m3/h)	9335	8388	8388	948.3	9335
Heat Flow	(kW)	1.050e+006	9.432e+005	3.831e+005	1.024e+005	4.355e+005
Molar Enthalpy	(kJ/kgmole)	1.306e+004	1.306e+004	5306	1.254e+004	5419

Name		5	6	7	9	10
Vapour Fraction		1.0000	1.0000	1.0000	1.0000	1.0000
Temperature	(C)	290.65	650.00	330.39	46.285	305.39
Pressure	(MPa)	7.0710	7.0000	6.8600	0.13790 *	7.1400
Molar Flow	(kgmole/s)	80.370	8.1602	8.1602	0.10162	8.1639
Mass Flow	(kg/s)	321.72	32.665	32.665	2.8198	32.680
Liquid Volume Flow	(m3/h)	9335	947.9	947.9	12.84	948.3
Heat Flow	(kW)	4.498e+005	1.066e+005	5.239e+004	-590.9	4.820e+004
Molar Enthalpy	(kJ/kgmole)	5597	1.306e+004	6420	-5815	5904

Name		11	12	13	14	15
Vapour Fraction		0.0000	0.0000	0.1542	1.0000	1.0000
Temperature	(C)	27.317	26.899	268.86	600.00 *	557.36
Pressure	(MPa)	5.4000	5.4000	5.3000	5.2000	5.2000
Molar Flow	(kgmole/s)	0.96087	1.4344	1.4344	1.4344	1.5939
Mass Flow	(kg/s)	17.310	25.840	25.840	25.840	26.164
Liquid Volume Flow	(m3/h)	62.44	93.21	93.21	93.21	109.8
Heat Flow	(kW)	-2.740e+005	-4.090e+005	-3.731e+005	-3.169e+005	-3.169e+005
Molar Enthalpy	(kJ/kgmole)	-2.851e+005	-2.852e+005	-2.601e+005	-2.210e+005	-1.988e+005

Name		16	17	18	19	20
Vapour Fraction		1.0000	1.0000	0.7724	1.0000	0.0000
Temperature	(C)	740.58	577.36	144.00	26.000	26.000 *
Pressure	(MPa)	5.1000	4.9000	4.8000	4.8000	4.8000
Molar Flow	(kgmole/s)	1.5939	1.5939	1.5939	1.1166	0.47723
Mass Flow	(kg/s)	26.164	10.863	10.863	2.2664	8.5969
Liquid Volume Flow	(m3/h)	109.8	147.0	147.0	116.0	31.01
Heat Flow	(kW)	-3.049e+005	-8.779e+004	-1.237e+005	-200.4	-1.361e+005
Molar Enthalpy	(kJ/kgmole)	-1.913e+005	-5.508e+004	-7.762e+004	-179.4	-2.852e+005

Name		21	22	23	24	25
Vapour Fraction		0.0000	0.0000	1.0000	1.0000	1.0000
Temperature	(C)	26.052	26.052 *	35.491	35.491 *	176.67 *
Pressure	(MPa)	5.4000	5.4000 *	5.2000	5.2000 *	0.31419
Molar Flow	(kgmole/s)	0.47723	0.47349 *	0.15995	0.15950 *	0.82437
Mass Flow	(kg/s)	8.5969	8.5296	0.32465	0.32373	23.783
Liquid Volume Flow	(m3/h)	31.01	30.77	16.61	16.56	98.98
Heat Flow	(kW)	-1.361e+005	-1.350e+005	15.03	14.98	3694
Molar Enthalpy	(kJ/kgmole)	-2.852e+005	-2.852e+005	93.95	93.95	4482

Name		26	27	29	30	32
Vapour Fraction		1.0000	1.0000	1.0000	1.0000	1.0000
Temperature	(C)	169.16	767.06 *	780.00	792.07	176.67 *
Pressure	(MPa)	5.3000	5.2000	5.1000	4.9000	0.81971
Molar Flow	(kgmole/s)	0.82437	0.82437	0.82437	1.3025	0.82437
Mass Flow	(kg/s)	23.783 *	23.783	23.783	39.083	23.783
Liquid Volume Flow	(m3/h)	98.98	98.98	98.98	147.4	98.98
Heat Flow	(kW)	3396	1.924e+004	1.959e+004	3.189e+004	3683
Molar Enthalpy	(kJ/kgmole)	4120	2.333e+004	2.376e+004	2.448e+004	4467

HYPROTECH	INL Calgary, Alberta CANADA	Case Name:	C:\Documents and Settings\mgq\Desktop\NGNP\Vary ROT\Thermal Ne
		Unit Set:	NGNP Econ
		Date/Time:	Wed Aug 18 11:57:30 2010

Workbook: Case (Main) (continued)

Streams (continued)

Name		31	33	34	35	36
Vapour Fraction		1.0000	1.0000	1.0000	1.0000	1.0000
Temperature	(C)	43.333 *	43.333 *	176.67 *	21.103	1889.3
Pressure	(MPa)	0.30819	0.80371	2.1364	0.11032	0.13514
Molar Flow	(kgmole/s)	0.82437	0.82437	0.82437	0.10162	0.10162
Mass Flow	(kg/s)	23.783	23.783	23.783	2.8198	2.8198
Liquid Volume Flow	(m3/h)	98.98	98.98	98.98	12.84	12.20
Heat Flow	(kW)	423.5	394.8	3653	-667.1	-590.9
Molar Enthalpy	(kJ/kgmole)	513.8	478.9	4431	-6565	-5815
Name		37	38	39	40	41
Vapour Fraction		0.0000	1.0000	1.0000	1.0000	1.0000
Temperature	(C)	1889.3	1889.3	1889.3	804.95	765.58
Pressure	(MPa)	0.13514	0.13514	0.13514	0.13238	0.13238
Molar Flow	(kgmole/s)	0.00000	8.8891e-002	1.2728e-002	1.2728e-002	8.8891e-002
Mass Flow	(kg/s)	0.00000	2.4666	0.35319 *	0.35319	2.4666
Liquid Volume Flow	(m3/h)	0.0000	10.67	1.527	1.527	10.67
Heat Flow	(kW)	0.0000	-516.9	-74.01	-623.9	-4484
Molar Enthalpy	(kJ/kgmole)	-5815	-5815	-5815	-4.902e+004	-5.045e+004
Name		42	43	45	44	46
Vapour Fraction		1.0000	0.9282	1.0000	1.0000	0.0000
Temperature	(C)	770.52	46.661	550.00 *	148.89 *	38.718
Pressure	(MPa)	0.13238	1.0342e-002 *	9.8000	0.12962	10.000 *
Molar Flow	(kgmole/s)	0.10162	3.5772e-002	3.5772e-002	0.10162	3.5772e-002
Mass Flow	(kg/s)	2.8198	0.64443	0.64443	2.8198	0.64443
Liquid Volume Flow	(m3/h)	12.20	2.325	2.325	12.20	2.325
Heat Flow	(kW)	-5108	-8707	-8013	-7261	-1.017e+004
Molar Enthalpy	(kJ/kgmole)	-5.027e+004	-2.434e+005	-2.240e+005	-7.145e+004	-2.842e+005
Name		Air In	47	48	49	Air
Vapour Fraction		1.0000	0.0000	1.0000	1.0000	1.0000
Temperature	(C)	26.850 *	37.778 *	43.333 *	63.753	21.111 *
Pressure	(MPa)	0.10132 *	1.0342e-002	2.0957	0.10133 *	0.11032 *
Molar Flow	(kgmole/s)	0.82437	3.5772e-002	0.82437	1.3025	9.2882e-002
Mass Flow	(kg/s)	23.783	0.64443	23.783	39.083	2.6797
Liquid Volume Flow	(m3/h)	98.98	2.325	98.98	147.4	11.15
Heat Flow	(kW)	37.83	-1.017e+004	321.9	1472	-11.38
Molar Enthalpy	(kJ/kgmole)	45.89	-2.844e+005	390.5	1130	-122.5
Name		Ambient Cooling	Circ1 Pwr	Circ2 Pwr	Cond Pmp Pwr	Cond Q
Vapour Fraction		---	---	---	---	---
Temperature	(C)	---	---	---	---	---
Pressure	(MPa)	---	---	---	---	---
Molar Flow	(kgmole/s)	---	---	---	---	---
Mass Flow	(kg/s)	---	---	---	---	---
Liquid Volume Flow	(m3/h)	---	---	---	---	---
Heat Flow	(kW)	-1.260e+004	1.431e+004	1964	8.604	1467
Molar Enthalpy	(kJ/kgmole)	---	---	---	---	---
Name		Electric Power Out	Electrolysis Power	From SG	Gas Turbine Power	H2/Steam
Vapour Fraction		---	---	1.0000	---	1.0000
Temperature	(C)	---	---	293.95	---	800.00
Pressure	(MPa)	---	---	6.8600	---	5.0000
Molar Flow	(kgmole/s)	---	---	8.1639	---	1.5939
Mass Flow	(kg/s)	---	---	32.680	---	10.863
Liquid Volume Flow	(m3/h)	---	---	948.3	---	147.0
Heat Flow	(kW)	2.518e+005	-2.373e+005	4.624e+004	1.458e+004	-7.582e+004
Molar Enthalpy	(kJ/kgmole)	---	---	5663	---	-4.757e+004

INL Calgary, Alberta CANADA	Case Name:	C:\Documents and Settings\mgq\Desktop\NGNP\Vary ROT\Thermal Ne
	Unit Set:	NGNP Econ
	Date/Time:	Wed Aug 18 11:57:30 2010

Workbook: Case (Main) (continued)

Streams (continued)

Name		Hydrogen Product	Hydrogen Recycle	Natural Gas	Oxygen Product	Process Heat 1
Vapour Fraction		1.0000	1.0000	1.0000	1.0000	---
Temperature	(C)	26.000	26.000	21.111 *	427.45	---
Pressure	(MPa)	4.8000	4.8000	0.11032	4.8000	---
Molar Flow	(kgmole/s)	0.95668	0.15995	8.7364e-003	1.3025	---
Mass Flow	(kg/s)	1.9418	0.32465	0.14016 *	39.083	---
Liquid Volume Flow	(m3/h)	99.36	16.61	1.685	147.4	---
Heat Flow	(kW)	-171.7	-28.70	-655.8	1.605e+004	-6.548e-011
Molar Enthalpy	(kJ/kgmole)	-179.4	-179.4	-7.506e+004	1.232e+004	---
Name		Q-100	Q-101	Q-102	Q-103	Q-104
Vapour Fraction		---	---	---	---	---
Temperature	(C)	---	---	---	---	---
Pressure	(MPa)	---	---	---	---	---
Molar Flow	(kgmole/s)	---	---	---	---	---
Mass Flow	(kg/s)	---	---	---	---	---
Liquid Volume Flow	(m3/h)	---	---	---	---	---
Heat Flow	(kW)	3657	3271	3259	3288	3258
Molar Enthalpy	(kJ/kgmole)	---	---	---	---	---
Name		Q-105	RIT Goal	Q-106	Q-107	Steam/H2
Vapour Fraction		---	---	---	---	1.0000
Temperature	(C)	---	290.65	---	---	800.00 *
Pressure	(MPa)	---	---	---	---	5.0000 *
Molar Flow	(kgmole/s)	---	---	---	---	1.5939
Mass Flow	(kg/s)	---	---	---	---	26.164 *
Liquid Volume Flow	(m3/h)	---	---	---	---	109.8
Heat Flow	(kW)	3331	---	3074	76.27	-3.010e+005
Molar Enthalpy	(kJ/kgmole)	---	---	---	---	-1.888e+005
Name		Sweep Gas In	Ql	Reactor Heat	Recirc Power	Steam Trbn Pwr
Vapour Fraction		1.0000	---	---	---	---
Temperature	(C)	800.00	---	---	---	---
Pressure	(MPa)	5.0000	---	---	---	---
Molar Flow	(kgmole/s)	0.82437	---	---	---	---
Mass Flow	(kg/s)	23.783	---	---	---	---
Liquid Volume Flow	(m3/h)	98.98	---	---	---	---
Heat Flow	(kW)	2.014e+004	3.083e+005	6.000e+005 *	43.73	693.9
Molar Enthalpy	(kJ/kgmole)	2.443e+004	---	---	---	---
Name		Sweep Gas/O2 Out	Water In	Water Pump Power	Water Recycle Pump	
Vapour Fraction		1.0000	0.0000	---	---	
Temperature	(C)	800.00	26.850 *	---	---	
Pressure	(MPa)	5.0000	0.10132 *	---	---	
Molar Flow	(kgmole/s)	1.3025	0.96087	---	---	
Mass Flow	(kg/s)	39.083	17.310	---	---	
Liquid Volume Flow	(m3/h)	147.4	62.44	---	---	
Heat Flow	(kW)	3.225e+004	-2.741e+005	121.6	6.824	
Molar Enthalpy	(kJ/kgmole)	2.476e+004	-2.853e+005	---	---	

Composition

Name	1	2	4	3	5
Comp Mole Frac (Hydrogen)	0.00000 *	0.00000	0.00000	0.00000	0.00000
Comp Mole Frac (H2O)	0.00000 *	0.00000	0.00000	0.00000	0.00000
Comp Mole Frac (Oxygen)	0.00000 *	0.00000	0.00000	0.00000	0.00000
Comp Mole Frac (Nitrogen)	0.00000 *	0.00000	0.00000	0.00000	0.00000
Comp Mole Frac (CO2)	0.00000 *	0.00000	0.00000	0.00000	0.00000
Comp Mole Frac (Helium)	1.00000 *	1.00000	1.00000	1.00000	1.00000
Comp Mole Frac (Methane)	0.00000 *	0.00000	0.00000	0.00000	0.00000

INL Calgary, Alberta CANADA	Case Name: C:\Documents and Settings\mgq\Desktop\NGNP\Vary ROT\Thermal Ne Unit Set: NGNP Econ Date/Time: Wed Aug 18 11:57:30 2010

Workbook: Case (Main) (continued)

Composition (continued)

Name	6	9	7	8	10
Comp Mole Frac (Hydrogen)	0.00000	0.00000	0.00000	0.00000 *	0.00000
Comp Mole Frac (H2O)	0.00000	0.00000	0.00000	0.00000 *	0.00000
Comp Mole Frac (Oxygen)	0.00000	0.19195	0.00000	0.00000 *	0.00000
Comp Mole Frac (Nitrogen)	0.00000	0.72208	0.00000	0.00000 *	0.00000
Comp Mole Frac (CO2)	0.00000	0.00000	0.00000	0.00000 *	0.00000
Comp Mole Frac (Helium)	1.00000	0.00000	1.00000	1.00000 *	1.00000
Comp Mole Frac (Methane)	0.00000	0.08597	0.00000	0.00000 *	0.00000

Name	11	12	13	14	15
Comp Mole Frac (Hydrogen)	0.00000	0.00002	0.00002	0.00002	0.10000
Comp Mole Frac (H2O)	1.00000	0.99998	0.99998	0.99998	0.90000
Comp Mole Frac (Oxygen)	0.00000	0.00000	0.00000	0.00000	0.00000
Comp Mole Frac (Nitrogen)	0.00000	0.00000	0.00000	0.00000	0.00000
Comp Mole Frac (CO2)	0.00000	0.00000	0.00000	0.00000	0.00000
Comp Mole Frac (Helium)	0.00000	0.00000	0.00000	0.00000	0.00000
Comp Mole Frac (Methane)	0.00000	0.00000	0.00000	0.00000	0.00000

Name	16	17	18	19	20
Comp Mole Frac (Hydrogen)	0.10000	0.70000	0.70000	0.99914	0.00005
Comp Mole Frac (H2O)	0.90000	0.30000	0.30000	0.00086	0.99995
Comp Mole Frac (Oxygen)	0.00000	0.00000	0.00000	0.00000	0.00000
Comp Mole Frac (Nitrogen)	0.00000	0.00000	0.00000	0.00000	0.00000
Comp Mole Frac (CO2)	0.00000	0.00000	0.00000	0.00000	0.00000
Comp Mole Frac (Helium)	0.00000	0.00000	0.00000	0.00000	0.00000
Comp Mole Frac (Methane)	0.00000	0.00000	0.00000	0.00000	0.00000

Name	21	22	23	24	26
Comp Mole Frac (Hydrogen)	0.00005	0.00005 *	0.99914	0.99914 *	0.00000
Comp Mole Frac (H2O)	0.99995	0.99995 *	0.00086	0.00086 *	0.00000
Comp Mole Frac (Oxygen)	0.00000	0.00000 *	0.00000	0.00000 *	0.21000
Comp Mole Frac (Nitrogen)	0.00000	0.00000 *	0.00000	0.00000 *	0.79000
Comp Mole Frac (CO2)	0.00000	0.00000 *	0.00000	0.00000 *	0.00000
Comp Mole Frac (Helium)	0.00000	0.00000 *	0.00000	0.00000 *	0.00000
Comp Mole Frac (Methane)	0.00000	0.00000 *	0.00000	0.00000 *	0.00000

Name	27	29	30	35	36
Comp Mole Frac (Hydrogen)	0.00000	0.00000	0.00000	0.00000	0.00000
Comp Mole Frac (H2O)	0.00000	0.00000	0.00000	0.00000	0.17196
Comp Mole Frac (Oxygen)	0.21000	0.21000	0.50000	0.19195	0.02000
Comp Mole Frac (Nitrogen)	0.79000	0.79000	0.50000	0.72208	0.72207
Comp Mole Frac (CO2)	0.00000	0.00000	0.00000	0.00000	0.08597
Comp Mole Frac (Helium)	0.00000	0.00000	0.00000	0.00000	0.00000
Comp Mole Frac (Methane)	0.00000	0.00000	0.00000	0.08597	0.00000

Name	37	38	39	40	Air
Comp Mole Frac (Hydrogen)	0.00000	0.00000	0.00000	0.00000	0.00000 *
Comp Mole Frac (H2O)	0.17196	0.17196	0.17196	0.17196	0.00000 *
Comp Mole Frac (Oxygen)	0.02000	0.02000	0.02000	0.02000	0.21000 *
Comp Mole Frac (Nitrogen)	0.72207	0.72207	0.72207	0.72207	0.79000 *
Comp Mole Frac (CO2)	0.08597	0.08597	0.08597	0.08597	0.00000 *
Comp Mole Frac (Helium)	0.00000	0.00000	0.00000	0.00000	0.00000 *
Comp Mole Frac (Methane)	0.00000	0.00000	0.00000	0.00000	0.00000 *

HYPROTECH	INL Calgary, Alberta CANADA	Case Name: C:\Documents and Settings\mgq\Desktop\NGNP\Vary ROT\Thermal Ne Unit Set: NGNP Econ Date/Time: Wed Aug 18 11:57:30 2010

Workbook: Case (Main) (continued)

Composition (continued)

Name	From SG	H2/Steam	Hydrogen Product	25	31
Comp Mole Frac (Hydrogen)	0.00000	0.70000	0.99914	0.00000	0.00000
Comp Mole Frac (H2O)	0.00000	0.30000	0.00086	0.00000	0.00000
Comp Mole Frac (Oxygen)	0.00000	0.00000	0.00000	0.21000	0.21000
Comp Mole Frac (Nitrogen)	0.00000	0.00000	0.00000	0.79000	0.79000
Comp Mole Frac (CO2)	0.00000	0.00000	0.00000	0.00000	0.00000
Comp Mole Frac (Helium)	1.00000	0.00000	0.00000	0.00000	0.00000
Comp Mole Frac (Methane)	0.00000	0.00000	0.00000	0.00000	0.00000

Name	32	33	34	41	42
Comp Mole Frac (Hydrogen)	0.00000	0.00000	0.00000	0.00000	0.00000
Comp Mole Frac (H2O)	0.00000	0.00000	0.00000	0.17196	0.17196
Comp Mole Frac (Oxygen)	0.21000	0.21000	0.21000	0.02000	0.02000
Comp Mole Frac (Nitrogen)	0.79000	0.79000	0.79000	0.72207	0.72207
Comp Mole Frac (CO2)	0.00000	0.00000	0.00000	0.08597	0.08597
Comp Mole Frac (Helium)	0.00000	0.00000	0.00000	0.00000	0.00000
Comp Mole Frac (Methane)	0.00000	0.00000	0.00000	0.00000	0.00000

Name	43	44	45	46	47
Comp Mole Frac (Hydrogen)	0.00000	0.00000	0.00000	0.00000	0.00000 *
Comp Mole Frac (H2O)	1.00000	0.17196	1.00000	1.00000	1.00000 *
Comp Mole Frac (Oxygen)	0.00000	0.02000	0.00000	0.00000	0.00000 *
Comp Mole Frac (Nitrogen)	0.00000	0.72207	0.00000	0.00000	0.00000 *
Comp Mole Frac (CO2)	0.00000	0.08597	0.00000	0.00000	0.00000 *
Comp Mole Frac (Helium)	0.00000	0.00000	0.00000	0.00000	0.00000 *
Comp Mole Frac (Methane)	0.00000	0.00000	0.00000	0.00000	0.00000 *

Name	48	49	Air In	Hydrogen Recycle	Natural Gas
Comp Mole Frac (Hydrogen)	0.00000	0.00000	0.00000 *	0.99914	0.00000 *
Comp Mole Frac (H2O)	0.00000	0.00000	0.00000 *	0.00086	0.00000 *
Comp Mole Frac (Oxygen)	0.21000	0.50000	0.21000 *	0.00000	0.00000 *
Comp Mole Frac (Nitrogen)	0.79000	0.50000	0.79000 *	0.00000	0.00000 *
Comp Mole Frac (CO2)	0.00000	0.00000	0.00000 *	0.00000	0.00000 *
Comp Mole Frac (Helium)	0.00000	0.00000	0.00000 *	0.00000	0.00000 *
Comp Mole Frac (Methane)	0.00000	0.00000	0.00000 *	0.00000	1.00000 *

Name	RIT Goal	Oxygen Product	Steam/H2	Sweep Gas In	Sweep Gas/O2 Out
Comp Mole Frac (Hydrogen)	---	0.00000	0.10000	0.00000	0.00000
Comp Mole Frac (H2O)	---	0.00000	0.90000	0.00000	0.00000
Comp Mole Frac (Oxygen)	---	0.50000	0.00000	0.21000	0.50000
Comp Mole Frac (Nitrogen)	---	0.50000	0.00000	0.79000	0.50000
Comp Mole Frac (CO2)	---	0.00000	0.00000	0.00000	0.00000
Comp Mole Frac (Helium)	---	0.00000	0.00000	0.00000	0.00000
Comp Mole Frac (Methane)	---	0.00000	0.00000	0.00000	0.00000

Name	Water In
Comp Mole Frac (Hydrogen)	0.00000 *
Comp Mole Frac (H2O)	1.00000 *
Comp Mole Frac (Oxygen)	0.00000 *
Comp Mole Frac (Nitrogen)	0.00000 *
Comp Mole Frac (CO2)	0.00000 *
Comp Mole Frac (Helium)	0.00000 *
Comp Mole Frac (Methane)	0.00000 *

Coolers

Name		Condenser	E-102	E-103	E-104
Duty	(kW)	1467	3271	3288	3331
Feed Temperature	(C)	46.66	176.7 *	176.7 *	176.7 *
Product Temperature	(C)	37.78 *	43.33 *	43.33 *	43.33 *

INL Calgary, Alberta CANADA	Case Name: C:\Documents and Settings\mgq\Desktop\NGNP\Vary ROT\Thermal Ne Unit Set: NGNP Econ Date/Time: Wed Aug 18 11:57:30 2010

Workbook: Case (Main) (continued)

Heat Exchangers

Name		Sweep Hi Temp Recu	Hi Temp Steam/H2 R	E-100	E-101	Stm Gen
Duty	(kW)	354.5	1.198e+004	549.9	3967	-2152
UA	(kJ/C-h)	5.696e+004	1.184e+006	6701	4.817e+004	5.395e+004
LMTD	(C)	22.41	36.43	295.4	296.5	143.6
Minimum Approach	(C)	20.00	20.00	24.95	25.00	87.58

Heaters

Name		Reactor				
Duty	(kW)	6.000e+005 *				
Feed Temperature	(C)	290.6				
Product Temperature	(C)	650.0 *				

LNGs

Name		Low Temp Steam/H2	SG	Sweep Low Temp Re	IHX	
UA (Calculated)	(kJ/C-h)	1.640e+006	2.130e+006	5.831e+005	7.806e+006	
LMTD	(C)	78.84 *	94.94 *	97.79 *	25.00 *	
Exchanger Cold Duty	(kW)	3.593e+004	5.616e+004	1.584e+004	5.420e+004	
Minimum Approach	(C)	25.00	25.00	25.00	25.00	

Compressors

Name		Recirc	K-100	K-101	K-102	K-103
Feed Pressure	(MPa)	4.800	0.1013 *	0.3082	0.8037	2.096
Product Pressure	(MPa)	5.200	0.3142	0.8197	2.136	5.300
Molar Flow	(kgmole/s)	0.1600	0.8244	0.8244	0.8244	0.8244
Energy	(kW)	43.73	3657	3259	3258	3074
Adiabatic Efficiency		75 *	75 *	75 *	75 *	75 *
Polytropic Efficiency		75	79	78	78	78
Name		Circ1	Circ2	K-104		
Feed Pressure	(MPa)	6.860	6.860	0.1103		
Product Pressure	(MPa)	7.071	7.140	0.1379 *		
Molar Flow	(kgmole/s)	80.37	8.164	0.1016		
Energy	(kW)	1.431e+004	1964	76.27		
Adiabatic Efficiency		80 *	80 *	75 *		
Polytropic Efficiency		80	80	76		

Expanders

Name		Steam Turbine	Gas Turbine			
Feed Pressure	(MPa)	9.800	4.800			
Product Pressure	(MPa)	1.034e-002 *	0.1013 *			
Molar Flow	(kgmole/s)	3.577e-002	1.303			
Energy	(kW)	693.9	1.458e+004			
Adiabatic Efficiency		80 *	80 *			
Polytropic Efficiency		76	69			

Pumps

Name		Water Pump	Water Recycle Pump	Condenser Pump		
Delta P	(MPa)	5.299	0.6000	9.990		
Energy	(kW)	121.6	6.824	8.604		
Feed Pressure	(MPa)	0.1013 *	4.800	1.034e-002		
Product Pressure	(MPa)	5.400	5.400	10.00 *		
Molar Flow	(kgmole/s)	0.9609	0.4772	3.577e-002		
Adiabatic Efficiency	(%)	75.00 *	75.00 *	75.00 *		

HYPROTECH INL Calgary, Alberta CANADA	Case Name:	C:\Documents and Settings\mgq\Desktop\NGNP\Vary ROT\Thermal Ne
	Unit Set:	NGNP Econ
	Date/Time:	Wed Aug 18 11:57:30 2010

Workbook: Case (Main) (continued)

Unit Ops

Operation Name	Operation Type	Feeds	Products	Ignored	Calc. Level
High Temperature Electrolys	Standard Sub-Flowsheet	Steam/H2	H2/Steam	No	2500 *
		Sweep Gas In	Sweep Gas/O2 Out		
		Process Heat 1	Electrolysis Power		
Power Cycle	Standard Sub-Flowsheet	2	3	No	2500 *
			Electric Power Out		
			Ql		
Electrolysis Input and Outpu	Spreadsheet			No	500.0 *
Efficiencies	Spreadsheet			No	500.0 *
Reactor	Heater	5	1	No	500.0 *
		Reactor Heat			
T20	Tee	19	Hydrogen Product	No	500.0 *
			Hydrogen Recycle		
TEE-100	Tee	36	38	No	500.0 *
			39		
T1	Tee	1	2	No	500.0 *
			6		
Steam Turbine	Expander	45	43	No	500.0 *
			Steam Trbn Pwr		
Gas Turbine	Expander	Oxygen Product	49	No	500.0 *
			Gas Turbine Power		
Sweep Hi Temp Recup	Heat Exchanger	27	29	No	500.0 *
		Sweep Gas/O2 Out	30		
Hi Temp Steam/H2 Recup	Heat Exchanger	15	16	No	500.0 *
		H2/Steam	17		
E-100	Heat Exchanger	29	Sweep Gas In	No	500.0 *
		39	40		
E-101	Heat Exchanger	16	Steam/H2	No	500.0 *
		38	41		
Stm Gen	Heat Exchanger	42	44	No	500.0 *
		46	45		
M12	Mixer	14	15	No	500.0 *
		24			
M3	Mixer	11	12	No	500.0 *
		22			
M5	Mixer	Natural Gas	35	No	500.0 *
		Air			
MIX-100	Mixer	40	42	No	500.0 *
		41			
M1	Mixer	3	4	No	500.0 *
		7			
Recirc	Compressor	Hydrogen Recycle	23	No	500.0 *
		Recirc Power			
K-100	Compressor	Air In	25	No	500.0 *
		Q-100			
K-101	Compressor	31	32	No	500.0 *
		Q-102			
K-102	Compressor	33	34	No	500.0 *
		Q-104			
K-103	Compressor	48	26	No	500.0 *
		Q-106			
Circ1	Compressor	4	5	No	500.0 *
		Circ1 Pwr			
Circ2	Compressor	From SG	10	No	500.0 *
		Circ2 Pwr			

INL Calgary, Alberta CANADA	Case Name:	C:\Documents and Settings\mgq\Desktop\NGNP\Vary ROT\Thermal Ne
	Unit Set:	NGNP Econ
	Date/Time:	Wed Aug 18 11:57:30 2010

Workbook: Case (Main) (continued)

Unit Ops (continued)

Operation Name	Operation Type	Feeds	Products	Ignored	Calc. Level
K-104	Compressor	35 Q-107	9	No	500.0 *
Condenser	Cooler	43	47 Cond Q	No	500.0 *
E-102	Cooler	25	31 Q-101	No	500.0 *
E-103	Cooler	32	33 Q-103	No	500.0 *
E-104	Cooler	34	48 Q-105	No	500.0 *
Low Temp Steam/H2 Recup	LNG	12 17	13 18	No	500.0 *
SG	LNG	13 8	14 From SG	No	500.0 *
Sweep Low Temp Recup	LNG	26 30	27 Oxygen Product	No	500.0 *
IHX	LNG	10 6	8 7	No	500.0 *
Water Pump	Pump	Water In Water Pump Power	11	No	500.0 *
Water Recycle Pump	Pump	20 Water Recycle Pump Power	21	No	500.0 *
Condenser Pump	Pump	47 Cond Pmp Pwr	46	No	500.0 *
Water Separation Tank	Separator	18 Ambient Cooling	20 19 Ambient Cooling	No	500.0 *
RCY-1	Recycle	23	24	No	3500 *
RCY-2	Recycle	21	22	No	3500 *
SET-1	Set			No	500.0 *
SET-2	Set			No	500.0 *
SET-5	Set			No	500.0 *
ADJ-1	Adjust			No	3500 *
ADJ-2	Adjust			No	3500 *
ADJ-3	Adjust			No	3500 *
ADJ-4	Adjust			No	3500 *
ADJ-5	Adjust			No	3500 *
CRV-100	Conversion Reactor	9	37 36	No	500.0 *

Spreadsheet: Efficiencies

Units Set: NGNP

CONNECTIONS

Imported Variables

Cell	Object	Variable Description	Value
A2	Energy Stream: Reactor Heat	Heat Flow	6.000e+005 kW
A3	Energy Stream: Qh @TPL2	Heat Flow	5.601e+005 kW
A4	LNG: IHX	Exchanger Cold Duty	5.420e+004 kW
A6	Energy Stream: Circ1 Pwr	Power	1.431e+004 kW
C6	Energy Stream: Q-102	Power	3259 kW
C7	Energy Stream: Q-104	Power	3258 kW
D8	Material Stream: Natural Gas	Mass Higher Heating Value	5.515e+004 kJ/kg

INL Calgary, Alberta CANADA	Case Name:	C:\Documents and Settings\mgq\Desktop\NGNP\Vary ROT\Thermal Ne
	Unit Set:	NGNP Econ
	Date/Time:	Wed Aug 18 11:57:30 2010

Spreadsheet: Efficiencies (continued)

Units Set: NGNP

CONNECTIONS

Imported Variables

Cell	Object	Variable Description	Value
A7	Energy Stream: Electric Power Out	Power	2.518e+005 kW
A8	Tee: T1	Flow Ratio (Flow Ratio_1)	0.8985
B3	Energy Stream: Ambient Cooling	Heat Flow	-1.260e+004 kW
B4	Energy Stream: Cond Q	Heat Flow	1467 kW
C2	Energy Stream: Electrolysis Power	Power	-2.373e+005 kW
C4	Energy Stream: Circ2 Pwr	Power	1964 kW
C5	Energy Stream: Q-100	Power	3657 kW
C8	Energy Stream: Q-106	Power	3074 kW
C9	Energy Stream: Water Pump Power	Power	121.6 kW
C10	Energy Stream: Water Recycle Pump Po	Power	6.824 kW
C11	Energy Stream: Cond Pmp Pwr	Power	8.604 kW
C12	Energy Stream: Recirc Power	Power	43.73 kW
C13	Energy Stream: Steam Trbn Pwr	Power	693.9 kW
C14	Energy Stream: Gas Turbine Power	Power	1.458e+004 kW
D5	Material Stream: Hydrogen Product	Mass Flow	1.9418 kg/s
D6	Material Stream: Hydrogen Product	Mass Higher Heating Value	1.393e+005 kJ/kg
D7	Material Stream: Natural Gas	Mass Flow	0.14016 kg/s
B15	Energy Stream: Q-107	Heat Flow	76.27 kW
A12	Material Stream: 1	Temperature	650.00 C

Exported Variables' Formula Results

Cell	Object	Variable Description	Value
A13	RIT Goal	Temperature	290.65 C

PARAMETERS

Exportable Variables

Cell	Visible Name	Variable Description	Variable Type	Value
A5	A5: Total Electric Power Produced	Total Electric Power Produced	Energy	5.471e+005 kW
A9	A9: Power Available for Electrolysis	Power Available for Electrolysis	Energy	2.390e+005 kW
A10	A10: Power Cycle Thermal Efficiency	Power Cycle Thermal Efficiency	Percent	43.68
A13	A13: Temperature	Temperature	Temperature	290.65 C
B2	B2: Heat Flow	Heat Flow	Energy	0.0000 kW
B5	B5: Total Ambient Cooling	Total Ambient Cooling	Energy	1.407e+004 kW
B7	B7: Cooling Power for Power Cycle	Cooling Power for Power Cycle	Energy	0.0000 kW
B8	B8: Cooling Power for Electrolysis	Cooling Power for Electrolysis	Energy	63.22 kW
B10	B10: Power Needed for Electrolysis	Power Needed for Electrolysis	---	<empty>
C3	C3:		Power	1453 kW
C15	C15: Power Needed for Electrolysis	Power Needed for Electrolysis	Energy	2.390e+005 kW
D2	D2: Excess Power	Excess Power	Energy	0.6158 kW
D9	D9: Hydrogen Production Efficiency	Hydrogen Production Efficiency	Percent	44.51

User Variables

FORMULAS

Cell	Formula	Result
A5	=A3/(A3+A4)*A2	5.471e+005 kW
A9	=A7-A8*A6-B7	2.390e+005 kW
A10	=A9/A5*100	43.68
A13	= 0.82049516*A12 - 242.67641718	290.65 C
B5	=B2-B3+B4	1.407e+004 kW
B8	=(0.00450015022*((B4-B3)/1000)- 0.000092174537)*1000	63.22 kW

INL Calgary, Alberta CANADA	Case Name:	C:\Documents and Settings\mgq\Desktop\NGNP\Vary ROT\Thermal Ne
	Unit Set:	NGNP Econ
	Date/Time:	Wed Aug 18 11:57:30 2010

Spreadsheet: Efficiencies (continued)

Units Set: NGNP

FORMULAS

Cell	Formula	Result
C3	=(1-A8)*A6	1453 kW
C15	=-C2+C3+C4+C5+C6+C7+C8+C9+C10+C11+C12-C13-C14+B8+B15	2.390e+005 kW
D2	=A9-C15	0.6158 kW
D9	=D5*D6/(D7*D8+A2)*100	44.51

Spreadsheet

	A	B	C	D
1	Power Cycle Efficiency *	Total Ambient Cooling *	Needed for Electrolysis *	Excess Power *
2	6.000e+005 kW *	0.0000 kW *	-2.373e+005 kW	0.6158 kW
3	5.601e+005 kW	-1.260e+004 kW	1453 kW	
4	5.420e+004 kW	1467 kW	1964 kW	n Production Efficiency *
5	5.471e+005 kW	1.407e+004 kW	3657 kW	1.9418 kg/s
6	1.431e+004 kW	Cooling Tower Power *	3259 kW	1.393e+005 kJ/kg
7	2.518e+005 kW	0.0000 kW *	3258 kW	0.14016 kg/s *
8	0.8985	63.22 kW	3074 kW	5.515e+004 kJ/kg
9	2.390e+005 kW		121.6 kW	44.51
10	43.68	<empty> *	6.824 kW	
11			8.604 kW	
12	650.00 C *		43.73 kW	
13	290.65 C		693.9 kW	
14			1.458e+004 kW	
15		76.27 kW	2.390e+005 kW	

Spreadsheet: Electrolysis Input and Output

Units Set: Electrolysis

CONNECTIONS

Imported Variables

Cell	Object	Variable Description	Value

Exported Variables' Formula Results

Cell	Object	Variable Description	Value

PARAMETERS

Exportable Variables

Cell	Visible Name	Variable Description	Variable Type	Value
B1	B1:		---	<empty>
B2	B2: Number of Cells	Number of Cells	---	1.240e+006
B3	B3: Cell Area	Cell Area	Small Area	225.0 cm2
B4	B4: Current Density (Amperes/cm^2)	Current Density (Amperes/cm^2)	---	0.6616
B5	B5: ASR @ 1100 K (ohms*cm^2)	ASR @ 1100 K (ohms*cm^2)	---	0.2776
B7	B7:		---	<empty>

User Variables

FORMULAS

Cell	Formula	Result

Spreadsheet

	A	B	C	D
1		<empty> *		

HYPROTECH INL Calgary, Alberta CANADA	Case Name:	C:\Documents and Settings\mgq\Desktop\NGNP\Vary ROT\Thermal Ne
	Unit Set:	NGNP Econ
	Date/Time:	Wed Aug 18 11:57:30 2010

Spreadsheet: Electrolysis Input and Output (contin

Units Set: Electrolysis

Spreadsheet

2	Number of Cells *	1.240e+006 *	
3	Cell Area *	225.0 cm2 *	
4	ensity (Amperes/cm^2) *	0.6616 *	
5	@ 1100 K (ohms*cm^2) *	0.2776 *	
6			
7		<empty> *	
8			
9			
10			

Workbook: High Temperature Electrolysis (TPL1)

Streams

Name		Process In @TPL1	Sweep Gas In @TPL	Cathode @TPL1	Sweep Gas/O2 Out @	Gas Products @TPL
Vapour Fraction		1.0000	1.0000	1.0000	1.0000	1.0000
Temperature	(C)	800.00	800.00	800.00 *	800.00	800.00
Pressure	(MPa)	5.0000	5.0000	5.0000	5.0000	5.0000
Molar Flow	(kgmole/s)	1.5939	0.82437	1.5939	1.3025	2.0720
Mass Flow	(kg/s)	26.164	23.783	10.863	39.083	26.164
Liquid Volume Flow	(m3/h)	109.8	98.98	147.0	147.4	195.4
Heat Flow	(kW)	-3.010e+005	2.014e+004	-7.582e+004	3.225e+004	-6.370e+004
Molar Enthalpy	(kJ/kgmole)	-1.888e+005	2.443e+004	-4.757e+004	2.476e+004	-3.075e+004
Name		Liquid Products @TP	Anode @TPL1	Molar Flow of Oxyger	Electrolysis Heating (	Electrode Heat @TPI
Vapour Fraction		0.0000	1.0000	---	---	---
Temperature	(C)	800.00	800.02	---	---	---
Pressure	(MPa)	5.0000	5.0000	---	---	---
Molar Flow	(kgmole/s)	0.00000	0.47813	0.47813	---	---
Mass Flow	(kg/s)	0.00000	15.300	15.300	---	---
Liquid Volume Flow	(m3/h)	0.0000	48.41	48.42	---	---
Heat Flow	(kW)	0.0000	1.211e+004	---	2.373e+005	-4.467
Molar Enthalpy	(kJ/kgmole)	-2.975e+004	2.532e+004	---	---	---
Name		Process Heat @TPL	Electrolysis Power @			
Vapour Fraction		---	---			
Temperature	(C)	---	---			
Pressure	(MPa)	---	---			
Molar Flow	(kgmole/s)	---	---			
Mass Flow	(kg/s)	---	---			
Liquid Volume Flow	(m3/h)	---	---			
Heat Flow	(kW)	-6.548e-011	-2.373e+005			
Molar Enthalpy	(kJ/kgmole)	---	---			

Unit Ops

Operation Name	Operation Type	Feeds	Products	Ignored	Calc. Level
Isothermal Electrolysis @TP	Conversion Reactor	Process In @TPL1 Electrolysis Heating @TPL1	Liquid Products @TPL1 Gas Products @TPL1 Electrolysis Heating @TPL1	No	500.0 *
MIX-100 @TPL1	Mixer	Liquid Products @TPL1 Anode @TPL1 Sweep Gas In @TPL1	Sweep Gas/O2 Out @TPL1	No	500.0 *
Electrodes @TPL1	Component Splitter	Gas Products @TPL1 Electrode Heat @TPL1	Cathode @TPL1 Anode @TPL1	No	500.0 *
Gas Product Temperature @	Set			No	500.0 *
Outlet Temperature @TPL1	Set			No	500.0 *
Outlet Pressure @TPL1	Set			No	500.0 *

INL Calgary, Alberta CANADA	Case Name:	C:\Documents and Settings\mgq\Desktop\NGNP\Vary ROT\Thermal Ne
	Unit Set:	NGNP Econ
	Date/Time:	Wed Aug 18 11:57:30 2010

Workbook: High Temperature Electrolysis (TPL1) (continued)

Unit Ops (continued)

Operation Name	Operation Type	Feeds	Products	Ignored	Calc. Level
Inlet Temperature @TPL1	Set			No	500.0 *
High Temperature Electrolys	Spreadsheet			No	500.0 *
Temp Average ASR @TPL1	Spreadsheet			No	500.0 *
ADJ-2 @TPL1	Adjust			Yes	3500 *
ADJ-1 @TPL1	Adjust			No	3500 *

Spreadsheet: High Temperature Electrolysis @TPL1 Units Set: Electrolysis_

CONNECTIONS

Imported Variables

Cell	Object	Variable Description	Value
D2	Material Stream: Process In @TPL1	Temperature	1073.1 K
D3	Material Stream: Cathode @TPL1	Temperature	1073.2 K
A8	Material Stream: Process In @TPL1	Pressure	5.0000e+006 N/m2
E2	Material Stream: Process In @TPL1	Comp Mole Frac (H2O)	0.90000
F2	Material Stream: Process In @TPL1	Comp Mole Frac (Hydrogen)	0.10000
G2	Material Stream: Sweep Gas In @TPL1	Comp Mole Frac (Oxygen)	0.21000
E3	Material Stream: Cathode @TPL1	Comp Mole Frac (H2O)	0.30000
F3	Material Stream: Cathode @TPL1	Comp Mole Frac (Hydrogen)	0.70000
G3	Material Stream: Sweep Gas/O2 Out @TP	Comp Mole Frac (Oxygen)	0.50000
B11	SpreadSheetCell: Electrolysis Input and O	B2: Number of Cells	1.240e+006
B12	SpreadSheetCell: Electrolysis Input and O	B3: Cell Area	225.0 cm2
B13	SpreadSheetCell: Electrolysis Input and O	B4: Current Density (Amperes/cm^2)	0.6616
B16	SpreadSheetCell: Temp Average ASR@B2	B2: Temp Aver ASR	0.4000
D11	Energy Stream: Electrolysis Heating @TP	Heat Flow	2.373e+005 kW
D12	Energy Stream: Electrode Heat @TPL1	Heat Flow	-4.467 kW

Exported Variables' Formula Results

Cell	Object	Variable Description	Value
B15	Molar Flow of Oxygen @TPL1	Molar Flow	478.13 gmole/s
B19	Electrolysis Power @TPL1	Power	-2.373e+005 kW
B20	Process Heat @TPL1	Heat Flow	-6.548e-011 kW

PARAMETERS

Exportable Variables

Cell	Visible Name	Variable Description	Variable Type	Value
A1	A1: A1 for Gibbs Formation Energy	A1 for Gibbs Formation Energy	Gibbs. Coeff. CA	2.382e+005 J/gmole
A2	A2: A2 for Gibbs Formation Energy	A2 for Gibbs Formation Energy	Gibbs. Coeff. CB	39.95 J/gmole-K
A3	A3: A3 for Gibbs Formation Energy	A3 for Gibbs Formation Energy	Gibbs. Coeff. CC	3.319e-003 kJ/gmol-K
A4	A4: A4 for Gibbs Formation Energy (kJ/gmol-K^	A4 for Gibbs Formation Energy (kJ/gmol-K^3)	---	-3.532e-008
A5	A5: A5 for Gibbs Formation Energy	A5 for Gibbs Formation Energy	Gibbs. Coeff. CB	-12.85 J/gmole-K
A6	A6: Fa Faraday Number (J/Volt-gmole)	Fa Faraday Number (J/Volt-gmole)	---	9.649e+004
A7	A7: R Universal Gas Constant	R Universal Gas Constant	Entropy	8.314 J/gmole-K
A9	A9: Standard Pressure	Standard Pressure	Pressure	1.0132e+005 N/m2
B14	B14:		---	148.9
B15	B15: Molar Flow	Molar Flow	Flow	478.13 gmole/s
B17	B17:		Vapour Fraction	1.0212
B18	B18:		Vapour Fraction	1.2858
B19	B19: Power	Power	Power	-2.373e+005 kW
B20	B20: Heat Flow	Heat Flow	Energy	-6.548e-011 kW
D4	D4:		Temperature	-4.5475e-013 K

INL Calgary, Alberta CANADA	Case Name:	C:\Documents and Settings\mgq\Desktop\NGNP\Vary ROT\Thermal Ne
	Unit Set:	NGNP Econ
	Date/Time:	Wed Aug 18 11:57:30 2010

Spreadsheet: High Temperature Electrolysis @TPL1

Units Set: Electrolysis_

PARAMETERS

Exportable Variables

Cell	Visible Name	Variable Description	Variable Type	Value
D6	D6:		Temperature	1073.1 K
D8	D8:		---	6.035e-007
D9	D9:		---	1.327e+006
E4	E4:		Vapour Fraction	-0.6000
E5	E5:		Vapour Fraction	0.3336
F4	F4:		Vapour Fraction	0.6000
F5	F5:		Vapour Fraction	-0.6194
G4	G4:		Vapour Fraction	0.2900
G5	G5:		Vapour Fraction	-0.3088
H2	H2:		---	10.36
H3	H3:		---	24.67
H4	H4:		---	14.31
H5	H5:		---	40.55
I2	I2:		Molar Enthalpy	1.887e+005 J/gmole
I3	I3:		Molar Enthalpy	1.887e+005 J/gmole
I6	I6:		Molar Enthalpy	1.887e+005 J/gmole
J2	J2:		Entropy	2.321e+008 J/gmole-K
J3	J3:		Entropy	2.321e+008 J/gmole-K
K2	K2:		---	0.9301
K3	K3:		---	1.091
K6	K6:		Vapour Fraction	1.0212
K7	K7:		---	1.060

User Variables

FORMULAS

Cell	Formula	Result
B14	=B12*B13	148.9
B15	=B11*B14/(4*A6)	478.13 gmole/s
B17	@IF(@ABS(D4)<1e-3,K6,K7)	1.0212
B18	=B17+B13*B16	1.2858
B19	=-B11*B18*B14/1000	-2.373e+005 kW
B20	=B19+D11+D12	-6.548e-011 kW
D4	=D2-D3	-4.5475e-013 K
D6	=(D2+D3)/2	1073.1 K
D8	=1/(2*A6*H4*F4)	6.035e-007
D9	=-1/(2*A6*H4*F4*D4)	1.327e+006
E4	=E3-E2	-0.6000
E5	=(E3*@LN(E3)-E3) - (E2*@LN(E2)-E2)	0.3336
F4	=F3-F2	0.6000
F5	=(F3*@LN(F3)-F3) - (F2*@LN(F2)-F2)	-0.6194
G4	=G3-G2	0.2900
G5	=(G3*@LN(G3)-G3) - (G2*@LN(G2)-G2)	-0.3088
H2	=G2*A8/A9	10.36
H3	=G3*A8/A9	24.67
H4	=H3-H2	14.31
H5	=(H3*@LN(H3)-H3) - (H2*@LN(H2)-H2)	40.55
I2	=A1 + A2*D2+ A3*D2^2 + A4*D2^3 + A5*D2*@LN(D2)	1.887e+005 J/gmole
I3	=A1 + A2*D3+ A3*D3^2 + A4*D3^3 + A5*D3*@LN(D3)	1.887e+005 J/gmole
I6	=A1 + A2*D6+ A3*D6^2 + A4*D6^3 + A5*D6*@LN(D6)	1.887e+005 J/gmole
J2	= A1*D2 + A2/2*D2^2 + A3/3*D2^3 + A4/4*D2^4 + A5/2*D2^2*(@LN(D2)-0.5)	2.321e+008 J/gmole-K
J3	= A1*D3 + A2/2*D3^2 + A3/3*D3^3 + A4/4*D3^4 + A5/2*D3^2*(@LN(D3)-0.5)	2.321e+008 J/gmole-K

HYPROTECH

INL
Calgary, Alberta
CANADA

Case Name:	C:\Documents and Settings\mgq\Desktop\NGNP\Vary ROT\Thermal Ne
Unit Set:	NGNP Econ
Date/Time:	Wed Aug 18 11:57:30 2010

Spreadsheet: High Temperature Electrolysis @TPL1

Units Set: Electrolysis_

FORMULAS

Cell	Formula	Result
K2	=1/(2*A6)*(I2-A7*D2*@LN(E2/(F2*H2^0.5)))	0.9301
K3	=1/(2*A6)*(I3-A7*D3*@LN(E3/(F3*H3^0.5)))	1.091
K6	=D8*(I6*F4*H4 + A7*D6*((E5+F5)*H4 + H5/2*F4))	1.0212
K7	=D9*(A7/2*(D3^2-D2^2)*((E5+F5)*H4 + H5/2*F4) + F4*H4*(J3-J2))	1.060

Spreadsheet

	A	B	C	D	E	F
1	2.382e+005 J/gmole *	Gibbs Formation Energy *		Temperature *	y H2O *	h H2 *
2	39.95 J/gmole-K *	Gibbs Formation Energy *	in *	1073.1 K	0.90000	0.10000
3	.319e-003 kJ/gmol-K^2 *	Gibbs Formation Energy *	out *	1073.2 K *	0.30000	0.70000
4	-3.532e-008 *	n Energy (kJ/gmol-K^3) *	Delta *	-4.5475e-013 K	-0.6000	0.6000
5	-12.85 J/gmole-K *	Gibbs Formation Energy *	Integration Coeff *		0.3336	-0.6194
6	9.649e+004 *	Number (J/Volt-gmole) *	Average *	1073.1 K		
7	8.314 J/gmole-K *	Universal Gas Constant *				
8	5.0000e+006 N/m2	Pressure *	C isothermal *	6.035e-007		
9	1.0132e+005 N/m2 *	Standard Pressure *	C average *	1.327e+006		
10						
11	Number of Cells *	1.240e+006 *	Electrolysis Heating *	2.373e+005 kW		
12	Cell Area *	225.0 cm2 *	Electrode Heat *	-4.467 kW		
13	ensity (Amperes/cm^2) *	0.6616 *				
14	Current (Amperes) *	148.9				
15	Molar Flow of Oxygen *	478.13 gmole/s				
16	Resistance (ohm*cm^2) *	0.4000 *				
17	Nernst Potential (Volts) *	1.0212				
18	perating Voltage (Volts) *	1.2858				
19	Electrolysis Power *	-2.373e+005 kW				
20	Process Heat *	-6.548e-011 kW				

	G	H	I	J	K
1	y O2 *	y A *	Delta G *	Integral Delta G dT *	Nernst Voltage *
2	0.21000	10.36	1.887e+005 J/gmole	2.321e+008 J/gmole-K	0.9301
3	0.50000	24.67	1.887e+005 J/gmole	2.321e+008 J/gmole-K	1.091
4	0.2900	14.31			
5	-0.3088	40.55			
6			1.887e+005 J/gmole	Isothermal *	1.0212
7				Average *	1.060
8					
9					
10					
11					
12					
13					
14					
15					
16					
17					
18					
19					
20					

INL Calgary, Alberta CANADA	Case Name:	C:\Documents and Settings\mgq\Desktop\NGNP\Vary ROT\Thermal Ne
	Unit Set:	NGNP Econ
	Date/Time:	Wed Aug 18 11:57:30 2010

Spreadsheet: Temp Average ASR @TPL1

Units Set: Electrolysis_

CONNECTIONS

Imported Variables

Cell	Object	Variable Description	Value
B1	SpreadSheetCell: Electrolysis Input and O	B5: ASR @ 1100 K (ohms*cm^2)	0.2776
A3	Material Stream: Process In @TPL1	Temperature	1073.1 K
E15	Material Stream: Cathode @TPL1	Temperature	1073.2 K

Exported Variables' Formula Results

Cell	Object	Variable Description	Value

PARAMETERS

Exportable Variables

Cell	Visible Name	Variable Description	Variable Type	Value
A4	A4:		Temperature	1073.1 K
A5	A5:		Temperature	1073.1 K
A6	A6:		Temperature	1073.1 K
A7	A7:		Temperature	1073.1 K
A8	A8:		Temperature	1073.1 K
A9	A9:		Temperature	1073.1 K
A10	A10:		Temperature	1073.1 K
A11	A11:		Temperature	1073.1 K
A12	A12:		Temperature	1073.1 K
A13	A13:		Temperature	1073.1 K
A14	A14:		Temperature	1073.1 K
A15	A15:		Temperature	1073.1 K
A16	A16:		Temperature	1073.1 K
A17	A17:		Temperature	1073.1 K
A18	A18:		Temperature	1073.1 K
A19	A19:		Temperature	1073.1 K
A20	A20:		---	40.00
B2	B2: Temp Aver ASR	Temp Aver ASR	---	0.4000
B3	B3:		---	0.4000
B4	B4:		---	0.4000
B5	B5:		---	0.4000
B6	B6:		---	0.4000
B7	B7:		---	0.4000
B8	B8:		---	0.4000
B9	B9:		---	0.4000
B10	B10:		---	0.4000
B11	B11:		---	0.4000
B12	B12:		---	0.4000
B13	B13:		---	0.4000
B14	B14:		---	0.4000
B15	B15:		---	0.4000
B16	B16:		---	0.4000
B17	B17:		---	0.4000
B18	B18:		---	0.4000
B19	B19:		---	0.4000
B20	B20:		---	19.20
C1	C1:		Temperature	1073.1 K
C2	C2:		Temperature	1073.1 K
C3	C3:		Temperature	1073.1 K
C4	C4:		Temperature	1073.1 K
C5	C5:		Temperature	1073.1 K

HYPROTECH INL Calgary, Alberta CANADA	Case Name:	C:\Documents and Settings\mgq\Desktop\NGNP\Vary ROT\Thermal Ne
	Unit Set:	NGNP Econ
	Date/Time:	Wed Aug 18 11:57:30 2010

Spreadsheet: Temp Average ASR @TPL1 (continuec

Units Set: Electrolysis_

PARAMETERS

Exportable Variables

Cell	Visible Name	Variable Description	Variable Type	Value
C6	C6:		Temperature	1073.1 K
C7	C7:		Temperature	1073.1 K
C8	C8:		Temperature	1073.1 K
C9	C9:		Temperature	1073.1 K
C10	C10:		Temperature	1073.1 K
C11	C11:		Temperature	1073.1 K
C12	C12:		Temperature	1073.1 K
C13	C13:		Temperature	1073.1 K
C14	C14:		Temperature	1073.1 K
C15	C15:		Temperature	1073.1 K
C16	C16:		Temperature	1073.1 K
C17	C17:		Temperature	1073.1 K
C18	C18:		Temperature	1073.1 K
C19	C19:		Temperature	1073.1 K
D1	D1:		---	0.4000
D2	D2:		---	0.4000
D3	D3:		---	0.4000
D4	D4:		---	0.4000
D5	D5:		---	0.4000
D6	D6:		---	0.4000
D7	D7:		---	0.4000
D8	D8:		---	0.4000
D9	D9:		---	0.4000
D10	D10:		---	0.4000
D11	D11:		---	0.4000
D12	D12:		---	0.4000
D13	D13:		---	0.4000
D14	D14:		---	0.4000
D15	D15:		---	0.4000
D16	D16:		---	0.4000
D17	D17:		---	0.4000
D18	D18:		---	0.4000
D19	D19:		---	0.4000
E1	E1:		Temperature	1073.1 K
E2	E2:		Temperature	1073.1 K
E3	E3:		Temperature	1073.1 K
E4	E4:		Temperature	1073.1 K
E5	E5:		Temperature	1073.1 K
E6	E6:		Temperature	1073.1 K
E7	E7:		Temperature	1073.1 K
E8	E8:		Temperature	1073.1 K
E9	E9:		Temperature	1073.1 K
E10	E10:		Temperature	1073.1 K
E11	E11:		Temperature	1073.1 K
E12	E12:		Temperature	1073.1 K
E13	E13:		Temperature	1073.1 K
E14	E14:		Temperature	1073.1 K
F1	F1:		---	0.4000
F2	F2:		---	0.4000
F3	F3:		---	0.4000
F4	F4:		---	0.4000
F5	F5:		---	0.4000

HYPROTECH INL Calgary, Alberta CANADA	Case Name:	C:\Documents and Settings\mgq\Desktop\NGNP\Vary ROT\Thermal Ne
	Unit Set:	NGNP Econ
	Date/Time:	Wed Aug 18 11:57:30 2010

Spreadsheet: Temp Average ASR @TPL1 (continuec

Units Set: Electrolysis_

PARAMETERS

Exportable Variables

Cell	Visible Name	Variable Description	Variable Type	Value
F6	F6:		---	0.4000
F7	F7:		---	0.4000
F8	F8:		---	0.4000
F9	F9:		---	0.4000
F10	F10:		---	0.4000
F11	F11:		---	0.4000
F12	F12:		---	0.4000
F13	F13:		---	0.4000
F14	F14:		---	0.4000
F15	F15:		---	0.4000
F16	F16:		Temperature	9.0949e-015 K

User Variables

FORMULAS

Cell	Formula	Result
A4	=A3+F16	1073.1 K
A5	=A4+F16	1073.1 K
A6	=A5+F16	1073.1 K
A7	=A6+F16	1073.1 K
A8	=A7+F16	1073.1 K
A9	=A8+F16	1073.1 K
A10	=A9+F16	1073.1 K
A11	=A10+F16	1073.1 K
A12	=A11+F16	1073.1 K
A13	=A12+F16	1073.1 K
A14	=A13+F16	1073.1 K
A15	=A14+F16	1073.1 K
A16	=A15+F16	1073.1 K
A17	=A16+F16	1073.1 K
A18	=A17+F16	1073.1 K
A19	=A18+F16	1073.1 K
A20	=4*(B4+B6+B8+B10+B12+B14+B16+B18+D1+D3+D5+D7+D9+D11+D13+D15+D17+D19+F2+F4+F6+F8+F10+F12+F1	40.00
B2	@if(E15==A3,F15,(1/3*F16*(B3+A20+B20+F15))/(E15-A3))	0.4000
B3	@EXP(10300/A3)*0.00003973+(B1-0.463)	0.4000
B4	@EXP(10300/A4)*0.00003973+(B1-0.463)	0.4000
B5	@EXP(10300/A5)*0.00003973+(B1-0.463)	0.4000
B6	@EXP(10300/A6)*0.00003973+(B1-0.463)	0.4000
B7	@EXP(10300/A7)*0.00003973+(B1-0.463)	0.4000
B8	@EXP(10300/A8)*0.00003973+(B1-0.463)	0.4000
B9	@EXP(10300/A9)*0.00003973+(B1-0.463)	0.4000
B10	@EXP(10300/A10)*0.00003973+(B1-0.463)	0.4000
B11	@EXP(10300/A11)*0.00003973+(B1-0.463)	0.4000
B12	@EXP(10300/A12)*0.00003973+(B1-0.463)	0.4000
B13	@EXP(10300/A13)*0.00003973+(B1-0.463)	0.4000
B14	@EXP(10300/A14)*0.00003973+(B1-0.463)	0.4000
B15	@EXP(10300/A15)*0.00003973+(B1-0.463)	0.4000
B16	@EXP(10300/A16)*0.00003973+(B1-0.463)	0.4000
B17	@EXP(10300/A17)*0.00003973+(B1-0.463)	0.4000
B18	@EXP(10300/A18)*0.00003973+(B1-0.463)	0.4000
B19	@EXP(10300/A19)*0.00003973+(B1-0.463)	0.4000
B20	=2*(B5+B7+B9+B11+B13+B15+B17+B19+D2+D4+D6+D8+D10+D12+D14+D16+D18+F1+F3+F5+F7+F9+F11+F13)	19.20

INL Calgary, Alberta CANADA	Case Name:	C:\Documents and Settings\mgq\Desktop\NGNP\Vary ROT\Thermal Ne
	Unit Set:	NGNP Econ
	Date/Time:	Wed Aug 18 11:57:30 2010

Spreadsheet: Temp Average ASR @TPL1 (continuec

Units Set: Electrolysis_

FORMULAS

Cell	Formula	Result
C1	=A19+F16	1073.1 K
C2	=C1+F16	1073.1 K
C3	=C2+F16	1073.1 K
C4	=C3+F16	1073.1 K
C5	=C4+F16	1073.1 K
C6	=C5+F16	1073.1 K
C7	=C6+F16	1073.1 K
C8	=C7+F16	1073.1 K
C9	=C8+F16	1073.1 K
C10	=C9+F16	1073.1 K
C11	=C10+F16	1073.1 K
C12	=C11+F16	1073.1 K
C13	=C12+F16	1073.1 K
C14	=C13+F16	1073.1 K
C15	=C14+F16	1073.1 K
C16	=C15+F16	1073.1 K
C17	=C16+F16	1073.1 K
C18	=C17+F16	1073.1 K
C19	=C18+F16	1073.1 K
D1	@EXP(10300/C1)*0.00003973+(B1-0.463)	0.4000
D2	@EXP(10300/C2)*0.00003973+(B1-0.463)	0.4000
D3	@EXP(10300/C3)*0.00003973+(B1-0.463)	0.4000
D4	@EXP(10300/C4)*0.00003973+(B1-0.463)	0.4000
D5	@EXP(10300/C5)*0.00003973+(B1-0.463)	0.4000
D6	@EXP(10300/C6)*0.00003973+(B1-0.463)	0.4000
D7	@EXP(10300/C7)*0.00003973+(B1-0.463)	0.4000
D8	@EXP(10300/C8)*0.00003973+(B1-0.463)	0.4000
D9	@EXP(10300/C9)*0.00003973+(B1-0.463)	0.4000
D10	@EXP(10300/C10)*0.00003973+(B1-0.463)	0.4000
D11	@EXP(10300/C11)*0.00003973+(B1-0.463)	0.4000
D12	@EXP(10300/C12)*0.00003973+(B1-0.463)	0.4000
D13	@EXP(10300/C13)*0.00003973+(B1-0.463)	0.4000
D14	@EXP(10300/C14)*0.00003973+(B1-0.463)	0.4000
D15	@EXP(10300/C15)*0.00003973+(B1-0.463)	0.4000
D16	@EXP(10300/C16)*0.00003973+(B1-0.463)	0.4000
D17	@EXP(10300/C17)*0.00003973+(B1-0.463)	0.4000
D18	@EXP(10300/C18)*0.00003973+(B1-0.463)	0.4000
D19	@EXP(10300/C19)*0.00003973+(B1-0.463)	0.4000
E1	=C19+F16	1073.1 K
E2	=E1+F16	1073.1 K
E3	=E2+F16	1073.1 K
E4	=E3+F16	1073.1 K
E5	=E4+F16	1073.1 K
E6	=E5+F16	1073.1 K
E7	=E6+F16	1073.1 K
E8	=E7+F16	1073.1 K
E9	=E8+F16	1073.1 K
E10	=E9+F16	1073.1 K
E11	=E10+F16	1073.1 K
E12	=E11+F16	1073.1 K
E13	=E12+F16	1073.1 K
E14	=E13+F16	1073.1 K
F1	@EXP(10300/E1)*0.00003973+(B1-0.463)	0.4000
F2	@EXP(10300/E2)*0.00003973+(B1-0.463)	0.4000

HYPROTECH

INL
Calgary, Alberta
CANADA

Case Name:	C:\Documents and Settings\mgq\Desktop\NGNP\Vary ROT\Thermal Ne
Unit Set:	NGNP Econ
Date/Time:	Wed Aug 18 11:57:30 2010

Spreadsheet: Temp Average ASR @TPL1 (continue

Units Set: Electrolysis_

FORMULAS

Cell	Formula	Result
F3	@EXP(10300/E3)*0.00003973+(B1-0.463)	0.4000
F4	@EXP(10300/E4)*0.00003973+(B1-0.463)	0.4000
F5	@EXP(10300/E5)*0.00003973+(B1-0.463)	0.4000
F6	@EXP(10300/E6)*0.00003973+(B1-0.463)	0.4000
F7	@EXP(10300/E7)*0.00003973+(B1-0.463)	0.4000
F8	@EXP(10300/E8)*0.00003973+(B1-0.463)	0.4000
F9	@EXP(10300/E9)*0.00003973+(B1-0.463)	0.4000
F10	@EXP(10300/E10)*0.00003973+(B1-0.463)	0.4000
F11	@EXP(10300/E11)*0.00003973+(B1-0.463)	0.4000
F12	@EXP(10300/E12)*0.00003973+(B1-0.463)	0.4000
F13	@EXP(10300/E13)*0.00003973+(B1-0.463)	0.4000
F14	@EXP(10300/E14)*0.00003973+(B1-0.463)	0.4000
F15	@EXP(10300/E15)*0.00003973+(B1-0.463)	0.4000
F16	=(E15-A3)/50	9.0949e-015 K

Spreadsheet

	A	B	C	D	E	F
1	ASR @ 1100 K *	0.2776 *	1073.1 K	0.4000	1073.1 K	0.4000
2	Temp Average ASR *	0.4000	1073.1 K	0.4000	1073.1 K	0.4000
3	1073.1 K	0.4000	1073.1 K	0.4000	1073.1 K	0.4000
4	1073.1 K	0.4000	1073.1 K	0.4000	1073.1 K	0.4000
5	1073.1 K	0.4000	1073.1 K	0.4000	1073.1 K	0.4000
6	1073.1 K	0.4000	1073.1 K	0.4000	1073.1 K	0.4000
7	1073.1 K	0.4000	1073.1 K	0.4000	1073.1 K	0.4000
8	1073.1 K	0.4000	1073.1 K	0.4000	1073.1 K	0.4000
9	1073.1 K	0.4000	1073.1 K	0.4000	1073.1 K	0.4000
10	1073.1 K	0.4000	1073.1 K	0.4000	1073.1 K	0.4000
11	1073.1 K	0.4000	1073.1 K	0.4000	1073.1 K	0.4000
12	1073.1 K	0.4000	1073.1 K	0.4000	1073.1 K	0.4000
13	1073.1 K	0.4000	1073.1 K	0.4000	1073.1 K	0.4000
14	1073.1 K	0.4000	1073.1 K	0.4000	1073.1 K	0.4000
15	1073.1 K	0.4000	1073.1 K	0.4000	1073.2 K *	0.4000
16	1073.1 K	0.4000	1073.1 K	0.4000	delta T *	9.0949e-015 K
17	1073.1 K	0.4000	1073.1 K	0.4000		
18	1073.1 K	0.4000	1073.1 K	0.4000		
19	1073.1 K	0.4000	1073.1 K	0.4000		
20	40.00	19.20				

Workbook: Power Cycle (TPL2)

Material Streams

Name		2 @TPL2	3 @TPL2			
Vapour Fraction		1.0000	1.0000			
Temperature	(C)	650.00	276.73			
Pressure	(MPa)	7.0000	6.8600			
Molar Flow	(kgmole/s)	72.210	72.210			
Mass Flow	(kg/s)	289.05	289.05			
Liquid Volume Flow	(m3/h)	8388	8388			
Heat Flow	(kW)	9.432e+005	3.831e+005			

HYPROTECH	INL Calgary, Alberta CANADA	Case Name: C:\Documents and Settings\mgq\Desktop\NGNP\Vary ROT\Thermal Ne Unit Set: NGNP Econ Date/Time: Wed Aug 18 11:57:30 2010

Workbook: Power Cycle (TPL2) (continued)

Compositions

Name	2 @TPL2	3 @TPL2			
Comp Mole Frac (Hydrogen)	0.00000	0.00000			
Comp Mole Frac (H2O)	0.00000	0.00000			
Comp Mole Frac (Oxygen)	0.00000	0.00000			
Comp Mole Frac (Nitrogen)	0.00000	0.00000			
Comp Mole Frac (CO2)	0.00000	0.00000			
Comp Mole Frac (Helium)	1.00000	1.00000			
Comp Mole Frac (Methane)	0.00000	0.00000			

Energy Streams

Name	Qh @TPL2	Electric Power Out @	Ql @TPL2		
Heat Flow (kW)	5.601e+005	2.518e+005	3.083e+005		

Unit Ops

Operation Name	Operation Type	Feeds	Products	Ignored	Calc. Level
HX @TPL2	Cooler	2 @TPL2	3 @TPL2 Qh @TPL2	No	500.0 *
SPRDSHT-1 @TPL2	Spreadsheet			No	500.0 *

Spreadsheet: SPRDSHT-1 @TPL2

Units Set: NGNP

CONNECTIONS

Imported Variables

Cell	Object	Variable Description	Value
A2	Material Stream: 2 @TPL2	Temperature	650.00 C
A6	Energy Stream: Qh @TPL2	Heat Flow	5.601e+005 kW

Exported Variables' Formula Results

Cell	Object	Variable Description	Value
A7	Electric Power Out @TPL2	Power	2.518e+005 kW
A8	Ql @TPL2	Heat Flow	3.083e+005 kW

PARAMETERS

Exportable Variables

Cell	Visible Name	Variable Description	Variable Type	Value
A1	A1: Ambient Temperature	Ambient Temperature	Temperature	21.111 C
A3	A3: Carnot Efficiency	Carnot Efficiency	---	0.6812
A4	A4: Ideal factor	Ideal factor	---	0.6600
A5	A5: Power Cycle Efficiency	Power Cycle Efficiency	---	0.4496
A7	A7: Power	Power	Power	2.518e+005 kW
A8	A8: Heat Flow	Heat Flow	Energy	3.083e+005 kW

User Variables

FORMULAS

Cell	Formula	Result
A3	=(A2-A1)/(A2+273.15)	0.6812
A5	=A3*A4	0.4496
A7	=A5*A6	2.518e+005 kW
A8	=(1-A5)*A6	3.083e+005 kW

* Specified by user.

INL
Calgary, Alberta
CANADA

Case Name:	C:\Documents and Settings\mgq\Desktop\NGNP\Vary ROT\Thermal Ne
Unit Set:	NGNP Econ
Date/Time:	Wed Aug 18 11:57:30 2010

Spreadsheet: SPRDSHT-1 @TPL2 (continued)

Units Set: NGNP

Spreadsheet

	A	B	C	D		
1	21.111 C *					
2	650.00 C					
3	0.6812					
4	0.6600 *					
5	0.4496					
6	5.601e+005 kW					
7	2.518e+005 kW					
8	3.083e+005 kW					
9						
10						

* Specified by user.

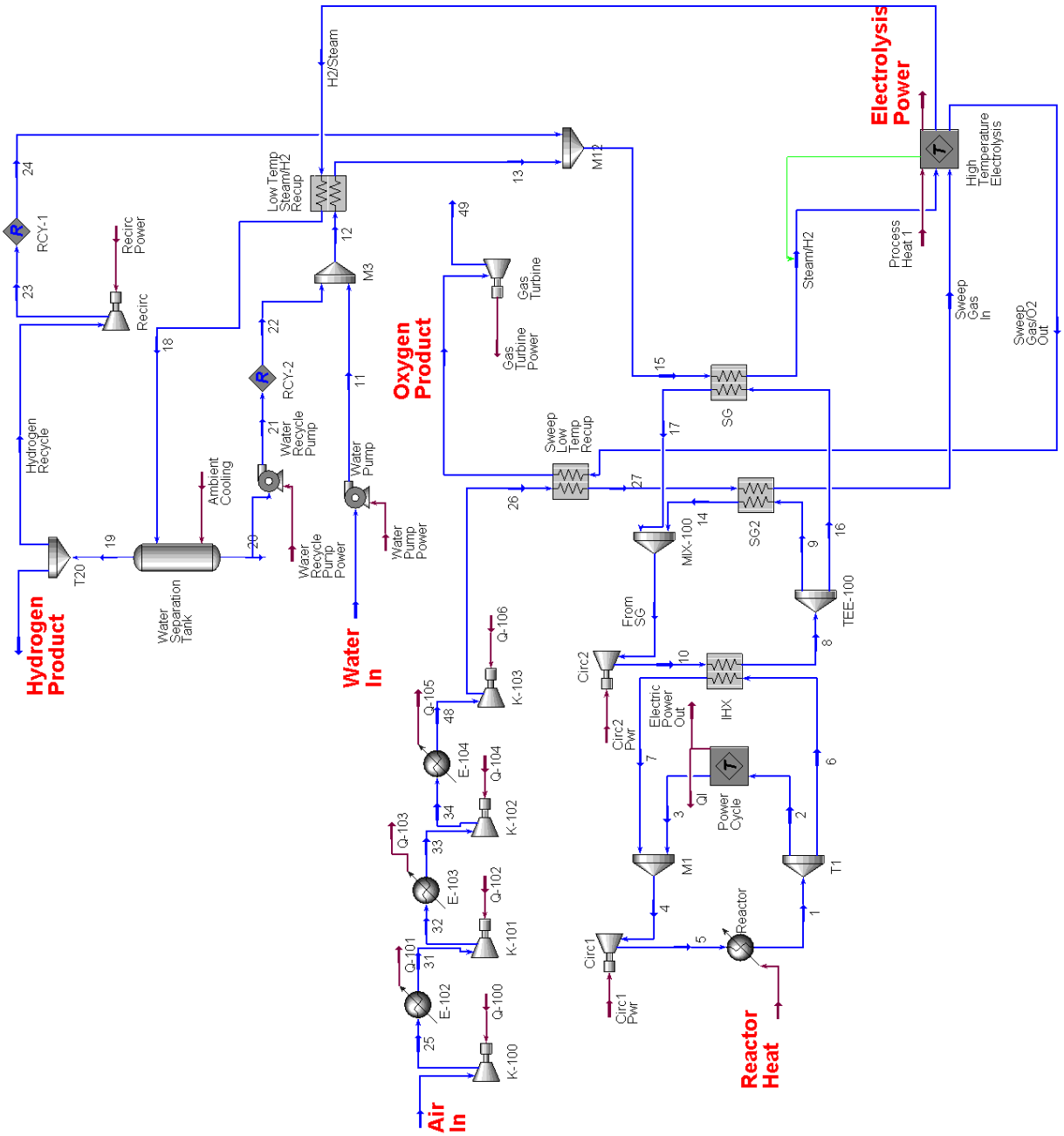

Figure B-6. Process Model of HTSE at or Above ROT of 850°C with Air Sweep.

INL
Calgary, Alberta
CANADA

Case Name: C:\Documents and Settings\mgq\Desktop\NGNP\Vary ROT\Thermal Ne
Unit Set: NGNP Econ
Date/Time: Wed Aug 18 12:07:45 2010

Workbook: Case (Main)

Streams

Name		1	2	3	11	4
Vapour Fraction		1.0000	1.0000	1.0000	0.0000	1.0000
Temperature	(C)	850.00 *	850.00	446.52	27.299	443.82 *
Pressure	(MPa)	7.0000 *	7.0000	6.8600	5.2000	6.8600
Molar Flow	(kgmole/s)	73.056	66.062	66.062	1.0224	73.056
Mass Flow	(kg/s)	292.44	264.44	264.44	18.419	292.44
Liquid Volume Flow	(m3/h)	8486	7673	7673	66.44	8486
Heat Flow	(kW)	1.258e+006	1.138e+006	5.835e+005	-2.915e+005	6.412e+005
Molar Enthalpy	(kJ/kgmole)	1.722e+004	1.722e+004	8833	-2.851e+005	8777
Name		5	6	7	12	8
Vapour Fraction		1.0000	1.0000	1.0000	0.0000	1.0000
Temperature	(C)	454.74	850.00	418.24	26.887	825.00 *
Pressure	(MPa)	7.0710	7.0000	6.8600	5.2000	7.0000 *
Molar Flow	(kgmole/s)	73.056	6.9935	6.9935	1.5270	6.9958
Mass Flow	(kg/s)	292.44	27.995	27.995	27.509	28.004
Liquid Volume Flow	(m3/h)	8486	812.3	812.3	99.24	812.6
Heat Flow	(kW)	6.579e+005	1.204e+005	5.766e+004	-4.355e+005	1.168e+005
Molar Enthalpy	(kJ/kgmole)	9006	1.722e+004	8245	-2.852e+005	1.670e+004
Name		9	10	14	15	16
Vapour Fraction		1.0000	1.0000	1.0000	0.5060	1.0000
Temperature	(C)	825.00	393.24	800.03	250.18	825.00
Pressure	(MPa)	7.0000	7.1400	6.8600	5.1000	7.0000
Molar Flow	(kgmole/s)	1.3950	6.9958	1.3950	1.6968	5.6008
Mass Flow	(kg/s)	5.5840 *	28.004	5.5840	27.854	22.420 *
Liquid Volume Flow	(m3/h)	162.0	812.6	162.0	116.9	650.6
Heat Flow	(kW)	2.329e+004	5.407e+004	2.257e+004	-3.844e+005	9.353e+004
Molar Enthalpy	(kJ/kgmole)	1.670e+004	7729	1.618e+004	-2.265e+005	1.670e+004
Name		17	18	19	20	21
Vapour Fraction		1.0000	0.7710	1.0000	0.0000	0.0000
Temperature	(C)	275.44	144.06	26.000	26.000 *	26.026
Pressure	(MPa)	6.8600	4.9000	4.9000	4.9000	5.2000
Molar Flow	(kgmole/s)	5.6008	1.6968	1.1888	0.50807	0.50807
Mass Flow	(kg/s)	22.420	11.565	2.4126	9.1526	9.1526
Liquid Volume Flow	(m3/h)	650.6	156.5	123.5	33.02	33.02
Heat Flow	(kW)	2.957e+004	-1.318e+005	-209.3	-1.449e+005	-1.449e+005
Molar Enthalpy	(kJ/kgmole)	5279	-7.767e+004	-176.0	-2.852e+005	-2.852e+005
Name		22	23	24	25	26
Vapour Fraction		0.0000	1.0000	1.0000	1.0000	1.0000
Temperature	(C)	26.052 *	30.717	30.717 *	176.67 *	166.26
Pressure	(MPa)	5.2000	5.1000	5.1000 *	0.31419	5.2000
Molar Flow	(kgmole/s)	0.50461 *	0.17028	0.16980 *	0.87025	0.87025
Mass Flow	(kg/s)	9.0902	0.34558	0.34461	25.107	25.107 *
Liquid Volume Flow	(m3/h)	32.79	17.68	17.63	104.5	104.5
Heat Flow	(kW)	-1.439e+005	-6.845	-6.826	3900	3509
Molar Enthalpy	(kJ/kgmole)	-2.852e+005	-40.20	-40.20	4482	4032
Name		27	31	32	33	34
Vapour Fraction		1.0000	1.0000	1.0000	1.0000	1.0000
Temperature	(C)	775.00 *	43.333 *	176.67 *	43.333 *	176.67 *
Pressure	(MPa)	5.1000	0.30819	0.81971	0.80371	2.1364
Molar Flow	(kgmole/s)	0.87025	0.87025	0.87025	0.87025	0.87025
Mass Flow	(kg/s)	25.107	25.107	25.107	25.107	25.107
Liquid Volume Flow	(m3/h)	104.5	104.5	104.5	104.5	104.5
Heat Flow	(kW)	2.053e+004	447.1	3888	416.8	3856
Molar Enthalpy	(kJ/kgmole)	2.360e+004	513.8	4467	478.9	4431

* Specified by user.

HYPROTECH INL Calgary, Alberta CANADA	Case Name:	C:\Documents and Settings\mgq\Desktop\NGNP\Vary ROT\Thermal Ne
	Unit Set:	NGNP Econ
	Date/Time:	Wed Aug 18 12:07:45 2010

Workbook: Case (Main) (continued)

Streams (continued)

Name		13	48	49	Air In	Ambient Cooling
Vapour Fraction		0.4425	1.0000	1.0000	1.0000	---
Temperature	(C)	266.39	43.333 *	64.075	26.850 *	---
Pressure	(MPa)	5.1000	2.0957	0.10133 *	0.10132 *	---
Molar Flow	(kgmole/s)	1.5270	0.87025	1.3793	0.87025	---
Mass Flow	(kg/s)	27.509	25.107	41.396	25.107	---
Liquid Volume Flow	(m3/h)	99.24	104.5	156.0	104.5	---
Heat Flow	(kW)	-3.844e+005	339.9	1571	39.94	-1.333e+004
Molar Enthalpy	(kJ/kgmole)	-2.517e+005	390.5	1139	45.89	---
Name		Circ1 Pwr	Circ2 Pwr	Electric Power Out	Electrolysis Power	From SG
Vapour Fraction		---	---	---	---	1.0000
Temperature	(C)	---	---	---	---	380.06
Pressure	(MPa)	---	---	---	---	6.8600
Molar Flow	(kgmole/s)	---	---	---	---	6.9958
Mass Flow	(kg/s)	---	---	---	---	28.004
Liquid Volume Flow	(m3/h)	---	---	---	---	812.6
Heat Flow	(kW)	1.674e+004	1934	2.698e+005	-2.526e+005	5.213e+004
Molar Enthalpy	(kJ/kgmole)	---	---	---	---	7452
Name		Gas Turbine Power	H2/Steam	Hydrogen Product	Hydrogen Recycle	Oxygen Product
Vapour Fraction		---	1.0000	1.0000	1.0000	1.0000
Temperature	(C)	---	800.00	26.000	26.000	430.22
Pressure	(MPa)	---	5.0000	4.9000	4.9000	4.9000
Molar Flow	(kgmole/s)	---	1.6968	1.0185	0.17028	1.3793
Mass Flow	(kg/s)	---	11.565	2.0670	0.34558	41.396
Liquid Volume Flow	(m3/h)	---	156.5	105.8	17.68	156.0
Heat Flow	(kW)	1.555e+004	-8.071e+004	-179.3	-29.98	1.712e+004
Molar Enthalpy	(kJ/kgmole)	---	-4.757e+004	-176.0	-176.0	1.241e+004
Name		Process Heat 1	Q-100	Q-101	Q-102	Q-103
Vapour Fraction		---	---	---	---	---
Temperature	(C)	---	---	---	---	---
Pressure	(MPa)	---	---	---	---	---
Molar Flow	(kgmole/s)	---	---	---	---	---
Mass Flow	(kg/s)	---	---	---	---	---
Liquid Volume Flow	(m3/h)	---	---	---	---	---
Heat Flow	(kW)	-6.185e-011	3860	3453	3440	3471
Molar Enthalpy	(kJ/kgmole)	---	---	---	---	---
Name		Q-104	Q-106	QI	Q-105	Reactor Heat
Vapour Fraction		---	---	---	---	---
Temperature	(C)	---	---	---	---	---
Pressure	(MPa)	---	---	---	---	---
Molar Flow	(kgmole/s)	---	---	---	---	---
Mass Flow	(kg/s)	---	---	---	---	---
Liquid Volume Flow	(m3/h)	---	---	---	---	---
Heat Flow	(kW)	3440	3169	2.841e+005	3516	6.000e+005 *
Molar Enthalpy	(kJ/kgmole)	---	---	---	---	---
Name		Recirc Power	RIT Goal	Water Pump Power	Steam/H2	Sweep Gas In
Vapour Fraction		---	---	---	1.0000	1.0000
Temperature	(C)	---	454.74	---	800.00 *	800.00
Pressure	(MPa)	---	---	---	5.0000 *	5.0000
Molar Flow	(kgmole/s)	---	---	---	1.6968	0.87025
Mass Flow	(kg/s)	---	---	---	27.854 *	25.107
Liquid Volume Flow	(m3/h)	---	---	---	116.9	104.5
Heat Flow	(kW)	23.13	---	124.5	-3.204e+005	2.126e+004
Molar Enthalpy	(kJ/kgmole)	---	---	---	-1.888e+005	2.443e+004

HYPROTECH	INL Calgary, Alberta CANADA	Case Name:	C:\Documents and Settings\mgq\Desktop\NGNP\Vary ROT\Thermal Ne
		Unit Set:	NGNP Econ
		Date/Time:	Wed Aug 18 12:07:45 2010

Workbook: Case (Main) (continued)

Streams (continued)

Name		Sweep Gas/O2 Out	Water In	Water Recycle Pump		
Vapour Fraction		1.0000	0.0000	---		
Temperature	(C)	800.00	26.850 *	---		
Pressure	(MPa)	5.0000	0.10132 *	---		
Molar Flow	(kgmole/s)	1.3793	1.0224	---		
Mass Flow	(kg/s)	41.396	18.419	---		
Liquid Volume Flow	(m3/h)	156.0	66.44	---		
Heat Flow	(kW)	3.415e+004	-2.917e+005	3.632		
Molar Enthalpy	(kJ/kgmole)	2.476e+004	-2.853e+005	---		

Composition

Name	1	2	11	12	13
Comp Mole Frac (Hydrogen)	0.00000 *	0.00000	0.00000	0.00002	0.00002
Comp Mole Frac (H2O)	0.00000 *	0.00000	1.00000	0.99998	0.99998
Comp Mole Frac (Oxygen)	0.00000 *	0.00000	0.00000	0.00000	0.00000
Comp Mole Frac (Nitrogen)	0.00000 *	0.00000	0.00000	0.00000	0.00000
Comp Mole Frac (CO2)	0.00000 *	0.00000	0.00000	0.00000	0.00000
Comp Mole Frac (Helium)	1.00000 *	1.00000	0.00000	0.00000	0.00000
Comp Mole Frac (Methane)	0.00000 *	0.00000	0.00000	0.00000	0.00000

Name	15	18	19	20	3
Comp Mole Frac (Hydrogen)	0.10000	0.70000	0.99916	0.00005	0.00000
Comp Mole Frac (H2O)	0.90000	0.30000	0.00084	0.99995	0.00000
Comp Mole Frac (Oxygen)	0.00000	0.00000	0.00000	0.00000	0.00000
Comp Mole Frac (Nitrogen)	0.00000	0.00000	0.00000	0.00000	0.00000
Comp Mole Frac (CO2)	0.00000	0.00000	0.00000	0.00000	0.00000
Comp Mole Frac (Helium)	0.00000	0.00000	0.00000	0.00000	1.00000
Comp Mole Frac (Methane)	0.00000	0.00000	0.00000	0.00000	0.00000

Name	22	23	21	24	26
Comp Mole Frac (Hydrogen)	0.00005 *	0.99916	0.00005	0.99916 *	0.00000
Comp Mole Frac (H2O)	0.99995 *	0.00084	0.99995	0.00084 *	0.00000
Comp Mole Frac (Oxygen)	0.00000 *	0.00000	0.00000	0.00000 *	0.21000
Comp Mole Frac (Nitrogen)	0.00000 *	0.00000	0.00000	0.00000 *	0.79000
Comp Mole Frac (CO2)	0.00000 *	0.00000	0.00000	0.00000 *	0.00000
Comp Mole Frac (Helium)	0.00000 *	0.00000	0.00000	0.00000 *	0.00000
Comp Mole Frac (Methane)	0.00000 *	0.00000	0.00000	0.00000 *	0.00000

Name	27	From SG	H2/Steam	4	5
Comp Mole Frac (Hydrogen)	0.00000	0.00000	0.70000	0.00000	0.00000
Comp Mole Frac (H2O)	0.00000	0.00000	0.30000	0.00000	0.00000
Comp Mole Frac (Oxygen)	0.21000	0.00000	0.00000	0.00000	0.00000
Comp Mole Frac (Nitrogen)	0.79000	0.00000	0.00000	0.00000	0.00000
Comp Mole Frac (CO2)	0.00000	0.00000	0.00000	0.00000	0.00000
Comp Mole Frac (Helium)	0.00000	1.00000	0.00000	1.00000	1.00000
Comp Mole Frac (Methane)	0.00000	0.00000	0.00000	0.00000	0.00000

Name	6	7	8	9	10
Comp Mole Frac (Hydrogen)	0.00000	0.00000	0.00000 *	0.00000	0.00000
Comp Mole Frac (H2O)	0.00000	0.00000	0.00000 *	0.00000	0.00000
Comp Mole Frac (Oxygen)	0.00000	0.00000	0.00000 *	0.00000	0.00000
Comp Mole Frac (Nitrogen)	0.00000	0.00000	0.00000 *	0.00000	0.00000
Comp Mole Frac (CO2)	0.00000	0.00000	0.00000 *	0.00000	0.00000
Comp Mole Frac (Helium)	1.00000	1.00000	1.00000 *	1.00000	1.00000
Comp Mole Frac (Methane)	0.00000	0.00000	0.00000 *	0.00000	0.00000

INL Calgary, Alberta CANADA	Case Name:	C:\Documents and Settings\mgq\Desktop\NGNP\Vary ROT\Thermal Ne
	Unit Set:	NGNP Econ
	Date/Time:	Wed Aug 18 12:07:45 2010

Workbook: Case (Main) (continued)

Composition (continued)

Name	14	16	17	Hydrogen Product	RIT Goal
Comp Mole Frac (Hydrogen)	0.00000	0.00000	0.00000	0.99916	---
Comp Mole Frac (H2O)	0.00000	0.00000	0.00000	0.00084	---
Comp Mole Frac (Oxygen)	0.00000	0.00000	0.00000	0.00000	---
Comp Mole Frac (Nitrogen)	0.00000	0.00000	0.00000	0.00000	---
Comp Mole Frac (CO2)	0.00000	0.00000	0.00000	0.00000	---
Comp Mole Frac (Helium)	1.00000	1.00000	1.00000	0.00000	---
Comp Mole Frac (Methane)	0.00000	0.00000	0.00000	0.00000	---

Name	Hydrogen Recycle	Oxygen Product	Steam/H2	Sweep Gas In	25
Comp Mole Frac (Hydrogen)	0.99916	0.00000	0.10000	0.00000	0.00000
Comp Mole Frac (H2O)	0.00084	0.00000	0.90000	0.00000	0.00000
Comp Mole Frac (Oxygen)	0.00000	0.50155	0.00000	0.21000	0.21000
Comp Mole Frac (Nitrogen)	0.00000	0.49845	0.00000	0.79000	0.79000
Comp Mole Frac (CO2)	0.00000	0.00000	0.00000	0.00000	0.00000
Comp Mole Frac (Helium)	0.00000	0.00000	0.00000	0.00000	0.00000
Comp Mole Frac (Methane)	0.00000	0.00000	0.00000	0.00000	0.00000

Name	31	32	33	34	48
Comp Mole Frac (Hydrogen)	0.00000	0.00000	0.00000	0.00000	0.00000
Comp Mole Frac (H2O)	0.00000	0.00000	0.00000	0.00000	0.00000
Comp Mole Frac (Oxygen)	0.21000	0.21000	0.21000	0.21000	0.21000
Comp Mole Frac (Nitrogen)	0.79000	0.79000	0.79000	0.79000	0.79000
Comp Mole Frac (CO2)	0.00000	0.00000	0.00000	0.00000	0.00000
Comp Mole Frac (Helium)	0.00000	0.00000	0.00000	0.00000	0.00000
Comp Mole Frac (Methane)	0.00000	0.00000	0.00000	0.00000	0.00000

Name	49	Air In	Sweep Gas/O2 Out	Water In	
Comp Mole Frac (Hydrogen)	0.00000	0.00000 *	0.00000	0.00000 *	
Comp Mole Frac (H2O)	0.00000	0.00000 *	0.00000	1.00000 *	
Comp Mole Frac (Oxygen)	0.50155	0.21000 *	0.50155	0.00000 *	
Comp Mole Frac (Nitrogen)	0.49845	0.79000 *	0.49845	0.00000 *	
Comp Mole Frac (CO2)	0.00000	0.00000 *	0.00000	0.00000 *	
Comp Mole Frac (Helium)	0.00000	0.00000 *	0.00000	0.00000 *	
Comp Mole Frac (Methane)	0.00000	0.00000 *	0.00000	0.00000 *	

Coolers

Name		E-102	E-103	E-104		
Duty	(kW)	3453	3471	3516		
Feed Temperature	(C)	176.7 *	176.7 *	176.7 *		
Product Temperature	(C)	43.33 *	43.33 *	43.33 *		

Heat Exchangers

Name						
Duty	(kW)					
UA	(kJ/C-h)					
LMTD	(C)					
Minimum Approach	(C)					

Heaters

Name		Reactor				
Duty	(kW)	6.000e+005 *				
Feed Temperature	(C)	454.7				
Product Temperature	(C)	850.0 *				

HYPROTECH INL Calgary, Alberta CANADA	Case Name:	C:\Documents and Settings\mgq\Desktop\NGNP\Vary ROT\Thermal Ne
	Unit Set:	NGNP Econ
	Date/Time:	Wed Aug 18 12:07:45 2010

Workbook: Case (Main) (continued)

LNGs

Name		Low Temp Steam/H2	SG	Sweep Low Temp Re	IHX	SG2
UA (Calculated)	(kJ/C-h)	1.864e+006	2.419e+006	6.180e+005	9.038e+006	1.045e+005
LMTD	(C)	98.68 *	95.18 *	99.17 *	25.00 *	25.01 *
Exchanger Cold Duty	(kW)	5.108e+004	6.396e+004	1.703e+004	6.276e+004	725.8
Minimum Approach	(C)	25.00	25.00	25.00	24.99	25.00

Compressors

Name		Recirc	K-100	K-101	K-102	K-103
Feed Pressure	(MPa)	4.900	0.1013 *	0.3082	0.8037	2.096
Product Pressure	(MPa)	5.100	0.3142	0.8197	2.136	5.200
Molar Flow	(kgmole/s)	0.1703	0.8702	0.8702	0.8702	0.8702
Energy	(kW)	23.13	3860	3440	3440	3169
Adiabatic Efficiency		75 *	75 *	75 *	75 *	75 *
Polytropic Efficiency		75	79	78	78	78
Name		Circ1	Circ2			
Feed Pressure	(MPa)	6.860	6.860			
Product Pressure	(MPa)	7.071	7.140			
Molar Flow	(kgmole/s)	73.06	6.996			
Energy	(kW)	1.674e+004	1934			
Adiabatic Efficiency		80 *	80 *			
Polytropic Efficiency		80	80			

Expanders

Name		Gas Turbine				
Feed Pressure	(MPa)	4.900				
Product Pressure	(MPa)	0.1013 *				
Molar Flow	(kgmole/s)	1.379				
Energy	(kW)	1.555e+004				
Adiabatic Efficiency		80 *				
Polytropic Efficiency		69				

Pumps

Name		Water Pump	Water Recycle Pump			
Delta P	(MPa)	5.099	0.3000			
Energy	(kW)	124.5	3.632			
Feed Pressure	(MPa)	0.1013 *	4.900			
Product Pressure	(MPa)	5.200	5.200			
Molar Flow	(kgmole/s)	1.022	0.5081			
Adiabatic Efficiency	(%)	75.00 *	75.00 *			

Unit Ops

Operation Name	Operation Type	Feeds	Products	Ignored	Calc. Level
High Temperature Electrolys	Standard Sub-Flowsheet	Steam/H2 Sweep Gas In Process Heat 1	H2/Steam Sweep Gas/O2 Out Electrolysis Power	No	2500 *
Power Cycle	Standard Sub-Flowsheet	2	3 Electric Power Out Ql	No	2500 *
Electrolysis Input and Outpu	Spreadsheet			No	500.0 *
Efficiencies	Spreadsheet			No	500.0 *
Reactor	Heater	5 Reactor Heat	1	No	500.0 *
T20	Tee	19	Hydrogen Product Hydrogen Recycle	No	500.0 *
T1	Tee	1	2	No	500.0 *

INL
Calgary, Alberta
CANADA

Case Name:	C:\Documents and Settings\mgq\Desktop\NGNP\Vary ROT\Thermal Ne
Unit Set:	NGNP Econ
Date/Time:	Wed Aug 18 12:07:45 2010

Workbook: Case (Main) (continued)

Unit Ops (continued)

Operation Name	Operation Type	Feeds	Products	Ignored	Calc. Level
T1	Tee		6	No	500.0 *
TEE-100	Tee	8	9	No	500.0 *
			16		
Gas Turbine	Expander	Oxygen Product	49	No	500.0 *
			Gas Turbine Power		
M12	Mixer	24	15	No	500.0 *
		13			
M3	Mixer	11	12	No	500.0 *
		22			
M1	Mixer	3	4	No	500.0 *
		7			
MIX-100	Mixer	14	From SG	No	500.0 *
		17			
Recirc	Compressor	Hydrogen Recycle	23	No	500.0 *
		Recirc Power			
K-100	Compressor	Air In	25	No	500.0 *
		Q-100			
K-101	Compressor	31	32	No	500.0 *
		Q-102			
K-102	Compressor	33	34	No	500.0 *
		Q-104			
K-103	Compressor	48	26	No	500.0 *
		Q-106			
Circ1	Compressor	4	5	No	500.0 *
		Circ1 Pwr			
Circ2	Compressor	From SG	10	No	500.0 *
		Circ2 Pwr			
E-102	Cooler	25	31	No	500.0 *
			Q-101		
E-103	Cooler	32	33	No	500.0 *
			Q-103		
E-104	Cooler	34	48	No	500.0 *
			Q-105		
Low Temp Steam/H2 Recup	LNG	12	13	No	500.0 *
		H2/Steam	18		
SG	LNG	15	Steam/H2	No	500.0 *
		16	17		
Sweep Low Temp Recup	LNG	26	27	No	500.0 *
		Sweep Gas/O2 Out	Oxygen Product		
IHX	LNG	10	8	No	500.0 *
		6	7		
SG2	LNG	27	Sweep Gas In	No	500.0 *
		9	14		
Water Pump	Pump	Water In	11	No	500.0 *
		Water Pump Power			
Water Recycle Pump	Pump	20	21	No	500.0 *
		Water Recycle Pump Power			
Water Separation Tank	Separator	18	20	No	500.0 *
		Ambient Cooling	19		
			Ambient Cooling		
RCY-1	Recycle	23	24	No	3500 *
RCY-2	Recycle	21	22	No	3500 *
SET-2	Set			No	500.0 *
SET-1	Set			No	500.0 *

* Specified by user.

INL Calgary, Alberta CANADA	Case Name: C:\Documents and Settings\mgq\Desktop\NGNP\Vary ROT\Thermal Ne Unit Set: NGNP Econ Date/Time: Wed Aug 18 12:07:45 2010

Workbook: Case (Main) (continued)

Unit Ops (continued)

Operation Name	Operation Type	Feeds	Products	Ignored	Calc. Level
ADJ-2	Adjust			No	3500 *
ADJ-5	Adjust			No	3500 *

Spreadsheet: Efficiencies

Units Set: NGNP

CONNECTIONS

Imported Variables

Cell	Object		Variable Description	Value
A2	Energy Stream:	Reactor Heat	Heat Flow	6.000e+005 kW
A3	Energy Stream:	Qh @TPL2	Heat Flow	5.540e+005 kW
A4	LNG:	IHX	Exchanger Cold Duty	6.276e+004 kW
A6	Energy Stream:	Circ1 Pwr	Power	1.674e+004 kW
C6	Energy Stream:	Q-102	Power	3440 kW
C7	Energy Stream:	Q-104	Power	3440 kW
A7	Energy Stream:	Electric Power Out	Power	2.698e+005 kW
A8	Tee:	T1	Flow Ratio (Flow Ratio_1)	0.9043
B3	Energy Stream:	Ambient Cooling	Heat Flow	-1.333e+004 kW
C2	Energy Stream:	Electrolysis Power	Power	-2.526e+005 kW
C4	Energy Stream:	Circ2 Pwr	Power	1934 kW
C5	Energy Stream:	Q-100	Power	3860 kW
C8	Energy Stream:	Q-106	Power	3169 kW
C9	Energy Stream:	Water Pump Power	Power	124.5 kW
C10	Energy Stream:	Water Recycle Pump Po	Power	3.632 kW
C12	Energy Stream:	Recirc Power	Power	23.13 kW
C14	Energy Stream:	Gas Turbine Power	Power	1.555e+004 kW
D5	Material Stream:	Hydrogen Product	Mass Flow	2.0670 kg/s
D6	Material Stream:	Hydrogen Product	Mass Higher Heating Value	1.393e+005 kJ/kg
A12	Material Stream:	1	Temperature	850.00 C

Exported Variables' Formula Results

Cell	Object	Variable Description	Value
A13	RIT Goal	Temperature	454.74 C

PARAMETERS

Exportable Variables

Cell	Visible Name	Variable Description	Variable Type	Value
A5	A5: Total Electric Power Produced	Total Electric Power Produced	Energy	5.389e+005 kW
A9	A9: Power Available for Electrolysis	Power Available for Electrolysis	Energy	2.547e+005 kW
A10	A10: Power Cycle Thermal Efficiency	Power Cycle Thermal Efficiency	Percent	47.26
A13	A13: Temperature	Temperature	Temperature	454.74 C
B2	B2: Heat Flow	Heat Flow	Energy	0.0000 kW
B4	B4:		Energy	<empty>
B5	B5: Total Ambient Cooling	Total Ambient Cooling	Energy	1.333e+004 kW
B7	B7: Cooling Power for Power Cycle	Cooling Power for Power Cycle	Energy	0.0000 kW
B8	B8: Cooling Power for Electrolysis	Cooling Power for Electrolysis	Energy	59.90 kW
B10	B10: Power Needed for Electrolysis	Power Needed for Electrolysis	---	<empty>
B15	B15:		Energy	0.0000 kW
C3	C3:		Power	1602 kW
C11	C11:		Power	0.0000 kW
C13	C13:		Power	0.0000 kW
C15	C15: Power Needed for Electrolysis	Power Needed for Electrolysis	Energy	2.547e+005 kW

* Specified by user.

HYPROTECH INL Calgary, Alberta CANADA	Case Name:	C:\Documents and Settings\mgq\Desktop\NGNP\Vary ROT\Thermal Ne
	Unit Set:	NGNP Econ
	Date/Time:	Wed Aug 18 12:07:45 2010

Spreadsheet: Efficiencies (continued)

Units Set: NGNP

PARAMETERS

Exportable Variables

Cell	Visible Name	Variable Description	Variable Type	Value
D2	D2: Excess Power	Excess Power	Energy	-1.327 kW
D7	D7:		Mass Flow	<empty>
D8	D8:		Mass Heating Value	<empty>
D9	D9: Hydrogen Production Efficiency	Hydrogen Production Efficiency	Percent	48.00

User Variables

FORMULAS

Cell	Formula	Result
A5	=A3/(A3+A4)*A2	5.389e+005 kW
A9	=A7-A8*A6-B7	2.547e+005 kW
A10	=A9/A5*100	47.26
A13	= 0.82049516*A12 - 242.67641718	454.74 C
B5	=B2-B3	1.333e+004 kW
B8	=(0.00450015022*((-B3)/1000)- 0.000092174537)*1000	59.90 kW
C3	=(1-A8)*A6	1602 kW
C15	=-C2+C3+C4+C5+C6+C7+C8+C9+C10+C11+C12-C13-C14+B8+B15	2.547e+005 kW
D2	=A9-C15	-1.327 kW
D9	=D5*D6/A2*100	48.00

Spreadsheet

	A	B	C	D
1	Power Cycle Efficiency *	Total Ambient Cooling *	Needed for Electrolysis *	Excess Power *
2	6.000e+005 kW *	0.0000 kW *	-2.526e+005 kW	-1.327 kW
3	5.540e+005 kW	-1.333e+004 kW	1602 kW	
4	6.276e+004 kW	<empty> *	1934 kW	n Production Efficiency *
5	5.389e+005 kW	1.333e+004 kW	3860 kW	2.0670 kg/s
6	1.674e+004 kW	Cooling Tower Power *	3440 kW	1.393e+005 kJ/kg
7	2.698e+005 kW	0.0000 kW *	3440 kW	<empty> *
8	0.9043	59.90 kW	3169 kW	<empty> *
9	2.547e+005 kW		124.5 kW	48.00
10	47.26	<empty> *	3.632 kW	
11			0.0000 kW *	
12	850.00 C *		23.13 kW	
13	454.74 C		0.0000 kW *	
14			1.555e+004 kW	
15		0.0000 kW *	2.547e+005 kW	

Spreadsheet: Electrolysis Input and Output

Units Set: Electrolysis

CONNECTIONS

Imported Variables

Cell	Object	Variable Description	Value

Exported Variables' Formula Results

Cell	Object	Variable Description	Value

HYPROTECH INL Calgary, Alberta CANADA	Case Name:	C:\Documents and Settings\mgq\Desktop\NGNP\Vary ROT\Thermal Ne
	Unit Set:	NGNP Econ
	Date/Time:	Wed Aug 18 12:07:45 2010

Spreadsheet: Electrolysis Input and Output (contin

Units Set: Electrolysis

PARAMETERS

Exportable Variables

Cell	Visible Name	Variable Description	Variable Type	Value
B1	B1:		---	<empty>
B2	B2: Number of Cells	Number of Cells	---	1.320e+006
B3	B3: Cell Area	Cell Area	Small Area	225.0 cm2
B4	B4: Current Density (Amperes/cm^2)	Current Density (Amperes/cm^2)	---	0.6614
B5	B5: ASR @ 1100 K (ohms*cm^2)	ASR @ 1100 K (ohms*cm^2)	---	0.2776
B7	B7:		---	<empty>

User Variables

FORMULAS

Cell	Formula	Result

Spreadsheet

	A	B	C	D		
1		<empty> *				
2	Number of Cells *	1.320e+006 *				
3	Cell Area *	225.0 cm2 *				
4	ensity (Amperes/cm^2) *	0.6614 *				
5	@ 1100 K (ohms*cm^2) *	0.2776 *				
6						
7		<empty> *				
8						
9						
10						

Workbook: High Temperature Electrolysis (TPL1)

Streams

Name		Process In @TPL1	Sweep Gas In @TPL	Cathode @TPL1	Sweep Gas/O2 Out @	Gas Products @TPL
Vapour Fraction		1.0000	1.0000	1.0000	1.0000	1.0000
Temperature	(C)	800.00	800.00	800.00 *	800.00	800.00
Pressure	(MPa)	5.0000	5.0000	5.0000	5.0000	5.0000
Molar Flow	(kgmole/s)	1.6968	0.87025	1.6968	1.3793	2.2058
Mass Flow	(kg/s)	27.854	25.107	11.565	41.396	27.854
Liquid Volume Flow	(m3/h)	116.9	104.5	156.5	156.0	208.0
Heat Flow	(kW)	-3.204e+005	2.126e+004	-8.071e+004	3.415e+004	-6.782e+004
Molar Enthalpy	(kJ/kgmole)	-1.888e+005	2.443e+004	-4.757e+004	2.476e+004	-3.075e+004

Name		Liquid Products @TP	Anode @TPL1	Molar Flow of Oxyger	Electrolysis Heating (	Electrode Heat @TPI
Vapour Fraction		0.0000	1.0000	---	---	---
Temperature	(C)	800.00	800.02	---	---	---
Pressure	(MPa)	5.0000	5.0000	---	---	---
Molar Flow	(kgmole/s)	0.00000	0.50902	0.50902	---	---
Mass Flow	(kg/s)	0.00000	16.289	16.289	---	---
Liquid Volume Flow	(m3/h)	0.0000	51.54	51.54	---	---
Heat Flow	(kW)	0.0000	1.289e+004	---	2.526e+005	-4.756
Molar Enthalpy	(kJ/kgmole)	-2.975e+004	2.532e+004	---	---	---

INL Calgary, Alberta CANADA	Case Name: C:\Documents and Settings\mgq\Desktop\NGNP\Vary ROT\Thermal Ne Unit Set: NGNP Econ Date/Time: Wed Aug 18 12:07:45 2010

Workbook: High Temperature Electrolysis (TPL1) (continued)

Streams (continued)

Name		Process Heat @TPL	Electrolysis Power @			
Vapour Fraction		---	---			
Temperature	(C)	---	---			
Pressure	(MPa)	---	---			
Molar Flow	(kgmole/s)	---	---			
Mass Flow	(kg/s)	---	---			
Liquid Volume Flow	(m3/h)	---	---			
Heat Flow	(kW)	-6.185e-011	-2.526e+005			
Molar Enthalpy	(kJ/kgmole)	---	---			

Unit Ops

Operation Name	Operation Type	Feeds	Products	Ignored	Calc. Level
Isothermal Electrolysis @TP	Conversion Reactor	Process In @TPL1 Electrolysis Heating @TPL1	Liquid Products @TPL1 Gas Products @TPL1 Electrolysis Heating @TPL1	No	500.0 *
MIX-100 @TPL1	Mixer	Liquid Products @TPL1 Anode @TPL1 Sweep Gas In @TPL1	Sweep Gas/O2 Out @TPL1	No	500.0 *
Electrodes @TPL1	Component Splitter	Gas Products @TPL1 Electrode Heat @TPL1	Cathode @TPL1 Anode @TPL1	No	500.0 *
Gas Product Temperature @	Set			No	500.0 *
Outlet Temperature @TPL1	Set			No	500.0 *
Outlet Pressure @TPL1	Set			No	500.0 *
Inlet Temperature @TPL1	Set			No	500.0 *
High Temperature Electrolys	Spreadsheet			No	500.0 *
Temp Average ASR @TPL1	Spreadsheet			No	500.0 *
ADJ-2 @TPL1	Adjust			Yes	3500 *
ADJ-1 @TPL1	Adjust			No	3500 *

Spreadsheet: High Temperature Electrolysis @TPL1

Units Set: Electrolysis_

CONNECTIONS

Imported Variables

Cell	Object	Variable Description	Value
D2	Material Stream: Process In @TPL1	Temperature	1073.1 K
D3	Material Stream: Cathode @TPL1	Temperature	1073.2 K
A8	Material Stream: Process In @TPL1	Pressure	5.0000e+006 N/m2
E2	Material Stream: Process In @TPL1	Comp Mole Frac (H2O)	0.90000
F2	Material Stream: Process In @TPL1	Comp Mole Frac (Hydrogen)	0.10000
G2	Material Stream: Sweep Gas In @TPL1	Comp Mole Frac (Oxygen)	0.21000
E3	Material Stream: Cathode @TPL1	Comp Mole Frac (H2O)	0.30000
F3	Material Stream: Cathode @TPL1	Comp Mole Frac (Hydrogen)	0.70000
G3	Material Stream: Sweep Gas/O2 Out @TP	Comp Mole Frac (Oxygen)	0.50155
B11	SpreadSheetCell: Electrolysis Input and O	B2: Number of Cells	1.320e+006
B12	SpreadSheetCell: Electrolysis Input and O	B3: Cell Area	225.0 cm2
B13	SpreadSheetCell: Electrolysis Input and O	B4: Current Density (Amperes/cm^2)	0.6614
B16	SpreadSheetCell: Temp Average ASR@B2	B2: Temp Aver ASR	0.4000
D11	Energy Stream: Electrolysis Heating @TP	Heat Flow	2.526e+005 kW
D12	Energy Stream: Electrode Heat @TPL1	Heat Flow	-4.756 kW

Exported Variables' Formula Results

Cell	Object	Variable Description	Value
B15	Molar Flow of Oxygen @TPL1	Molar Flow	509.02 gmole/s

HYPROTECH	INL Calgary, Alberta CANADA	Case Name: C:\Documents and Settings\mgq\Desktop\NGNP\Vary ROT\Thermal Ne Unit Set: NGNP Econ Date/Time: Wed Aug 18 12:07:45 2010

Spreadsheet: High Temperature Electrolysis @TPL1

Units Set: Electrolysis_

CONNECTIONS

Exported Variables' Formula Results

Cell	Object	Variable Description	Value
B19	Electrolysis Power @TPL1	Power	-2.526e+005 kW
B20	Process Heat @TPL1	Heat Flow	-6.185e-011 kW

PARAMETERS

Exportable Variables

Cell	Visible Name	Variable Description	Variable Type	Value
A1	A1: A1 for Gibbs Formation Energy	A1 for Gibbs Formation Energy	Gibbs. Coeff. CA	2.382e+005 J/gmole
A2	A2: A2 for Gibbs Formation Energy	A2 for Gibbs Formation Energy	Gibbs. Coeff. CB	39.95 J/gmole-K
A3	A3: A3 for Gibbs Formation Energy	A3 for Gibbs Formation Energy	Gibbs. Coeff. CC	3.319e-003 kJ/gmol-K
A4	A4: A4 for Gibbs Formation Energy (kJ/gmol-K^	A4 for Gibbs Formation Energy (kJ/gmol-K^3)	---	-3.532e-008
A5	A5: A5 for Gibbs Formation Energy	A5 for Gibbs Formation Energy	Gibbs. Coeff. CB	-12.85 J/gmole-K
A6	A6: Fa Faraday Number (J/Volt-gmole)	Fa Faraday Number (J/Volt-gmole)	---	9.649e+004
A7	A7: R Universal Gas Constant	R Universal Gas Constant	Entropy	8.314 J/gmole-K
A9	A9: Standard Pressure	Standard Pressure	Pressure	1.0132e+005 N/m2
B14	B14:		---	148.8
B15	B15: Molar Flow	Molar Flow	Flow	509.02 gmole/s
B17	B17:		Vapour Fraction	1.0212
B18	B18:		Vapour Fraction	1.2858
B19	B19: Power	Power	Power	-2.526e+005 kW
B20	B20: Heat Flow	Heat Flow	Energy	-6.185e-011 kW
D4	D4:		Temperature	-9.0949e-013 K
D6	D6:		Temperature	1073.1 K
D8	D8:		---	6.003e-007
D9	D9:		---	6.601e+005
E4	E4:		Vapour Fraction	-0.6000
E5	E5:		Vapour Fraction	0.3336
F4	F4:		Vapour Fraction	0.6000
F5	F5:		Vapour Fraction	-0.6194
G4	G4:		Vapour Fraction	0.2915
G5	G5:		Vapour Fraction	-0.3099
H2	H2:		---	10.36
H3	H3:		---	24.75
H4	H4:		---	14.39
H5	H5:		---	40.80
I2	I2:		Molar Enthalpy	1.887e+005 J/gmole
I3	I3:		Molar Enthalpy	1.887e+005 J/gmole
I6	I6:		Molar Enthalpy	1.887e+005 J/gmole
J2	J2:		Entropy	2.321e+008 J/gmole-K
J3	J3:		Entropy	2.321e+008 J/gmole-K
K2	K2:		---	0.9301
K3	K3:		---	1.091
K6	K6:		Vapour Fraction	1.0212
K7	K7:		---	1.060

User Variables

FORMULAS

Cell	Formula	Result
B14	=B12*B13	148.8
B15	=B11*B14/(4*A6)	509.02 gmole/s
B17	@IF(@ABS(D4)<1e-3,K6,K7)	1.0212

HYPROTECH INL Calgary, Alberta CANADA	Case Name:	C:\Documents and Settings\mgq\Desktop\NGNP\Vary ROT\Thermal Ne
	Unit Set:	NGNP Econ
	Date/Time:	Wed Aug 18 12:07:45 2010

Spreadsheet: High Temperature Electrolysis @TPL1

Units Set: Electrolysis_

FORMULAS

Cell	Formula	Result
B18	=B17+B13*B16	1.2858
B19	=-B11*B18*B14/1000	-2.526e+005 kW
B20	=B19+D11+D12	-6.185e-011 kW
D4	=D2-D3	-9.0949e-013 K
D6	=(D2+D3)/2	1073.1 K
D8	=1/(2*A6*H4*F4)	6.003e-007
D9	=-1/(2*A6*H4*F4*D4)	6.601e+005
E4	=E3-E2	-0.6000
E5	=(E3*@LN(E3)-E3) - (E2*@LN(E2)-E2)	0.3336
F4	=F3-F2	0.6000
F5	=(F3*@LN(F3)-F3) - (F2*@LN(F2)-F2)	-0.6194
G4	=G3-G2	0.2915
G5	=(G3*@LN(G3)-G3) - (G2*@LN(G2)-G2)	-0.3099
H2	=G2*A8/A9	10.36
H3	=G3*A8/A9	24.75
H4	=H3-H2	14.39
H5	=(H3*@LN(H3)-H3) - (H2*@LN(H2)-H2)	40.80
I2	=A1 + A2*D2+ A3*D2^2 + A4*D2^3 + A5*D2*@LN(D2)	1.887e+005 J/gmole
I3	=A1 + A2*D3+ A3*D3^2 + A4*D3^3 + A5*D3*@LN(D3)	1.887e+005 J/gmole
I6	=A1 + A2*D6+ A3*D6^2 + A4*D6^3 + A5*D6*@LN(D6)	1.887e+005 J/gmole
J2	= A1*D2 + A2/2*D2^2 + A3/3*D2^3 + A4/4*D2^4 + A5/2*D2^2*(@LN(D2)-0.5)	2.321e+008 J/gmole-K
J3	= A1*D3 + A2/2*D3^2 + A3/3*D3^3 + A4/4*D3^4 + A5/2*D3^2*(@LN(D3)-0.5)	2.321e+008 J/gmole-K
K2	=1/(2*A6)*(I2-A7*D2*@LN(E2/(F2*H2^0.5)))	0.9301
K3	=1/(2*A6)*(I3-A7*D3*@LN(E3/(F3*H3^0.5)))	1.091
K6	=D8*(I6*F4*H4 + A7*D6*((E5+F5)*H4 + H5/2*F4))	1.0212
K7	=D9*(A7/2*(D3^2-D2^2)*((E5+F5)*H4 + H5/2*F4) + F4*H4*(J3-J2))	1.060

Spreadsheet

	A	B	C	D	E	F
1	2.382e+005 J/gmole *	Gibbs Formation Energy *		Temperature *	y H2O *	h H2 *
2	39.95 J/gmole-K *	Gibbs Formation Energy *	in *	1073.1 K	0.90000	0.10000
3	.319e-003 kJ/gmol-K^2 *	Gibbs Formation Energy *	out *	1073.2 K *	0.30000	0.70000
4	-3.532e-008 *	n Energy (kJ/gmol-K^3) *	Delta *	-9.0949e-013 K	-0.6000	0.6000
5	-12.85 J/gmole-K *	Gibbs Formation Energy *	Integration Coeff *		0.3336	-0.6194
6	9.649e+004 *	Number (J/Volt-gmole) *	Average *	1073.1 K		
7	8.314 J/gmole-K *	Universal Gas Constant *				
8	5.0000e+006 N/m2	Pressure *	C isothermal *	6.003e-007		
9	1.0132e+005 N/m2 *	Standard Pressure *	C average *	6.601e+005		
10						
11	Number of Cells *	1.320e+006 *	Electrolysis Heating *	2.526e+005 kW		
12	Cell Area *	225.0 cm2 *	Electrode Heat *	-4.756 kW		
13	ensity (Amperes/cm^2) *	0.6614 *				
14	Current (Amperes) *	148.8				
15	Molar Flow of Oxygen *	509.02 gmole/s				
16	Resistance (ohm*cm^2) *	0.4000 *				
17	Nernst Potential (Volts) *	1.0212				
18	perating Voltage (Volts) *	1.2858				
19	Electrolysis Power *	-2.526e+005 kW				
20	Process Heat *	-6.185e-011 kW				

	G	H	I	J	K
1	y O2 *	y A *	Delta G *	Integral Delta G dT *	Nernst Voltage *
2	0.21000	10.36	1.887e+005 J/gmole	2.321e+008 J/gmole-K	0.9301
3	0.50155	24.75	1.887e+005 J/gmole	2.321e+008 J/gmole-K	1.091
4	0.2915	14.39			

HYPROTECH

INL
Calgary, Alberta
CANADA

Case Name:	C:\Documents and Settings\mgq\Desktop\NGNP\Vary ROT\Thermal Ne
Unit Set:	NGNP Econ
Date/Time:	Wed Aug 18 12:07:45 2010

Spreadsheet: High Temperature Electrolysis @TPL1

Units Set: Electrolysis_

Spreadsheet

5	-0.3099	40.80				
6			1.887e+005 J/gmole	Isothermal *	1.0212	
7				Average *	1.060	
8						
9						
10						
11						
12						
13						
14						
15						
16						
17						
18						
19						
20						

Spreadsheet: Temp Average ASR @TPL1

Units Set: Electrolysis_

CONNECTIONS

Imported Variables

Cell	Object	Variable Description	Value
B1	SpreadSheetCell: Electrolysis Input and O	B5: ASR @ 1100 K (ohms*cm^2)	0.2776
A3	Material Stream: Process In @TPL1	Temperature	1073.1 K
E15	Material Stream: Cathode @TPL1	Temperature	1073.2 K

Exported Variables' Formula Results

Cell	Object	Variable Description	Value

PARAMETERS

Exportable Variables

Cell	Visible Name	Variable Description	Variable Type	Value
A4	A4:		Temperature	1073.1 K
A5	A5:		Temperature	1073.1 K
A6	A6:		Temperature	1073.1 K
A7	A7:		Temperature	1073.1 K
A8	A8:		Temperature	1073.1 K
A9	A9:		Temperature	1073.1 K
A10	A10:		Temperature	1073.1 K
A11	A11:		Temperature	1073.1 K
A12	A12:		Temperature	1073.1 K
A13	A13:		Temperature	1073.1 K
A14	A14:		Temperature	1073.1 K
A15	A15:		Temperature	1073.1 K
A16	A16:		Temperature	1073.1 K
A17	A17:		Temperature	1073.1 K
A18	A18:		Temperature	1073.1 K
A19	A19:		Temperature	1073.1 K
A20	A20:		---	40.00
B2	B2: Temp Aver ASR	Temp Aver ASR	---	0.4000
B3	B3:		---	0.4000
B4	B4:		---	0.4000

* Specified by user.

INL Calgary, Alberta CANADA	Case Name:	C:\Documents and Settings\mgq\Desktop\NGNP\Vary ROT\Thermal Ne
	Unit Set:	NGNP Econ
	Date/Time:	Wed Aug 18 12:07:45 2010

Spreadsheet: Temp Average ASR @TPL1 (continuec

Units Set: Electrolysis_

PARAMETERS

Exportable Variables

Cell	Visible Name	Variable Description	Variable Type	Value
B5	B5:		---	0.4000
B6	B6:		---	0.4000
B7	B7:		---	0.4000
B8	B8:		---	0.4000
B9	B9:		---	0.4000
B10	B10:		---	0.4000
B11	B11:		---	0.4000
B12	B12:		---	0.4000
B13	B13:		---	0.4000
B14	B14:		---	0.4000
B15	B15:		---	0.4000
B16	B16:		---	0.4000
B17	B17:		---	0.4000
B18	B18:		---	0.4000
B19	B19:		---	0.4000
B20	B20:		---	19.20
C1	C1:		Temperature	1073.1 K
C2	C2:		Temperature	1073.1 K
C3	C3:		Temperature	1073.1 K
C4	C4:		Temperature	1073.1 K
C5	C5:		Temperature	1073.1 K
C6	C6:		Temperature	1073.1 K
C7	C7:		Temperature	1073.1 K
C8	C8:		Temperature	1073.1 K
C9	C9:		Temperature	1073.1 K
C10	C10:		Temperature	1073.1 K
C11	C11:		Temperature	1073.1 K
C12	C12:		Temperature	1073.1 K
C13	C13:		Temperature	1073.1 K
C14	C14:		Temperature	1073.1 K
C15	C15:		Temperature	1073.1 K
C16	C16:		Temperature	1073.1 K
C17	C17:		Temperature	1073.1 K
C18	C18:		Temperature	1073.1 K
C19	C19:		Temperature	1073.1 K
D1	D1:		---	0.4000
D2	D2:		---	0.4000
D3	D3:		---	0.4000
D4	D4:		---	0.4000
D5	D5:		---	0.4000
D6	D6:		---	0.4000
D7	D7:		---	0.4000
D8	D8:		---	0.4000
D9	D9:		---	0.4000
D10	D10:		---	0.4000
D11	D11:		---	0.4000
D12	D12:		---	0.4000
D13	D13:		---	0.4000
D14	D14:		---	0.4000
D15	D15:		---	0.4000
D16	D16:		---	0.4000
D17	D17:		---	0.4000

INL Calgary, Alberta CANADA	Case Name:	C:\Documents and Settings\mgq\Desktop\NGNP\Vary ROT\Thermal Ne
	Unit Set:	NGNP Econ
	Date/Time:	Wed Aug 18 12:07:45 2010

Spreadsheet: Temp Average ASR @TPL1 (continuec

Units Set: Electrolysis_

PARAMETERS

Exportable Variables

Cell	Visible Name	Variable Description	Variable Type	Value
D18	D18:		---	0.4000
D19	D19:		---	0.4000
E1	E1:		Temperature	1073.1 K
E2	E2:		Temperature	1073.1 K
E3	E3:		Temperature	1073.1 K
E4	E4:		Temperature	1073.1 K
E5	E5:		Temperature	1073.1 K
E6	E6:		Temperature	1073.1 K
E7	E7:		Temperature	1073.1 K
E8	E8:		Temperature	1073.1 K
E9	E9:		Temperature	1073.1 K
E10	E10:		Temperature	1073.1 K
E11	E11:		Temperature	1073.1 K
E12	E12:		Temperature	1073.1 K
E13	E13:		Temperature	1073.1 K
E14	E14:		Temperature	1073.1 K
F1	F1:		---	0.4000
F2	F2:		---	0.4000
F3	F3:		---	0.4000
F4	F4:		---	0.4000
F5	F5:		---	0.4000
F6	F6:		---	0.4000
F7	F7:		---	0.4000
F8	F8:		---	0.4000
F9	F9:		---	0.4000
F10	F10:		---	0.4000
F11	F11:		---	0.4000
F12	F12:		---	0.4000
F13	F13:		---	0.4000
F14	F14:		---	0.4000
F15	F15:		---	0.4000
F16	F16:		Temperature	1.8190e-014 K

User Variables

FORMULAS

Cell	Formula	Result
A4	=A3+F16	1073.1 K
A5	=A4+F16	1073.1 K
A6	=A5+F16	1073.1 K
A7	=A6+F16	1073.1 K
A8	=A7+F16	1073.1 K
A9	=A8+F16	1073.1 K
A10	=A9+F16	1073.1 K
A11	=A10+F16	1073.1 K
A12	=A11+F16	1073.1 K
A13	=A12+F16	1073.1 K
A14	=A13+F16	1073.1 K
A15	=A14+F16	1073.1 K
A16	=A15+F16	1073.1 K
A17	=A16+F16	1073.1 K
A18	=A17+F16	1073.1 K

INL Calgary, Alberta CANADA	Case Name:	C:\Documents and Settings\mgq\Desktop\NGNP\Vary ROT\Thermal Ne
	Unit Set:	NGNP Econ
	Date/Time:	Wed Aug 18 12:07:45 2010

Spreadsheet: Temp Average ASR @TPL1 (continue

Units Set: Electrolysis_

FORMULAS

Cell	Formula	Result
A19	=A18+F16	1073.1 K
A20	=4*(B4+B6+B8+B10+B12+B14+B16+B18+D1+D3+D5+D7+D9+D11+D13+D15+D17+D19+F2+F4+F6+F8+F10+F12+F1	40.00
B2	@if(E15==A3,F15,(1/3*F16*(B3+A20+B20+F15))/(E15-A3))	0.4000
B3	@EXP(10300/A3)*0.00003973+(B1-0.463)	0.4000
B4	@EXP(10300/A4)*0.00003973+(B1-0.463)	0.4000
B5	@EXP(10300/A5)*0.00003973+(B1-0.463)	0.4000
B6	@EXP(10300/A6)*0.00003973+(B1-0.463)	0.4000
B7	@EXP(10300/A7)*0.00003973+(B1-0.463)	0.4000
B8	@EXP(10300/A8)*0.00003973+(B1-0.463)	0.4000
B9	@EXP(10300/A9)*0.00003973+(B1-0.463)	0.4000
B10	@EXP(10300/A10)*0.00003973+(B1-0.463)	0.4000
B11	@EXP(10300/A11)*0.00003973+(B1-0.463)	0.4000
B12	@EXP(10300/A12)*0.00003973+(B1-0.463)	0.4000
B13	@EXP(10300/A13)*0.00003973+(B1-0.463)	0.4000
B14	@EXP(10300/A14)*0.00003973+(B1-0.463)	0.4000
B15	@EXP(10300/A15)*0.00003973+(B1-0.463)	0.4000
B16	@EXP(10300/A16)*0.00003973+(B1-0.463)	0.4000
B17	@EXP(10300/A17)*0.00003973+(B1-0.463)	0.4000
B18	@EXP(10300/A18)*0.00003973+(B1-0.463)	0.4000
B19	@EXP(10300/A19)*0.00003973+(B1-0.463)	0.4000
B20	=2*(B5+B7+B9+B11+B13+B15+B17+B19+D2+D4+D6+D8+D10+D12+D14+D16+D18+F1+F3+F5+F7+F9+F11+F13)	19.20
C1	=A19+F16	1073.1 K
C2	=C1+F16	1073.1 K
C3	=C2+F16	1073.1 K
C4	=C3+F16	1073.1 K
C5	=C4+F16	1073.1 K
C6	=C5+F16	1073.1 K
C7	=C6+F16	1073.1 K
C8	=C7+F16	1073.1 K
C9	=C8+F16	1073.1 K
C10	=C9+F16	1073.1 K
C11	=C10+F16	1073.1 K
C12	=C11+F16	1073.1 K
C13	=C12+F16	1073.1 K
C14	=C13+F16	1073.1 K
C15	=C14+F16	1073.1 K
C16	=C15+F16	1073.1 K
C17	=C16+F16	1073.1 K
C18	=C17+F16	1073.1 K
C19	=C18+F16	1073.1 K
D1	@EXP(10300/C1)*0.00003973+(B1-0.463)	0.4000
D2	@EXP(10300/C2)*0.00003973+(B1-0.463)	0.4000
D3	@EXP(10300/C3)*0.00003973+(B1-0.463)	0.4000
D4	@EXP(10300/C4)*0.00003973+(B1-0.463)	0.4000
D5	@EXP(10300/C5)*0.00003973+(B1-0.463)	0.4000
D6	@EXP(10300/C6)*0.00003973+(B1-0.463)	0.4000
D7	@EXP(10300/C7)*0.00003973+(B1-0.463)	0.4000
D8	@EXP(10300/C8)*0.00003973+(B1-0.463)	0.4000
D9	@EXP(10300/C9)*0.00003973+(B1-0.463)	0.4000
D10	@EXP(10300/C10)*0.00003973+(B1-0.463)	0.4000
D11	@EXP(10300/C11)*0.00003973+(B1-0.463)	0.4000
D12	@EXP(10300/C12)*0.00003973+(B1-0.463)	0.4000
D13	@EXP(10300/C13)*0.00003973+(B1-0.463)	0.4000
D14	@EXP(10300/C14)*0.00003973+(B1-0.463)	0.4000

INL Calgary, Alberta CANADA	Case Name:	C:\Documents and Settings\mgq\Desktop\NGNP\Vary ROT\Thermal Ne
	Unit Set:	NGNP Econ
	Date/Time:	Wed Aug 18 12:07:45 2010

Spreadsheet: Temp Average ASR @TPL1 (continuec

Units Set: Electrolysis_

FORMULAS

Cell	Formula	Result
D15	@EXP(10300/C15)*0.00003973+(B1-0.463)	0.4000
D16	@EXP(10300/C16)*0.00003973+(B1-0.463)	0.4000
D17	@EXP(10300/C17)*0.00003973+(B1-0.463)	0.4000
D18	@EXP(10300/C18)*0.00003973+(B1-0.463)	0.4000
D19	@EXP(10300/C19)*0.00003973+(B1-0.463)	0.4000
E1	=C19+F16	1073.1 K
E2	=E1+F16	1073.1 K
E3	=E2+F16	1073.1 K
E4	=E3+F16	1073.1 K
E5	=E4+F16	1073.1 K
E6	=E5+F16	1073.1 K
E7	=E6+F16	1073.1 K
E8	=E7+F16	1073.1 K
E9	=E8+F16	1073.1 K
E10	=E9+F16	1073.1 K
E11	=E10+F16	1073.1 K
E12	=E11+F16	1073.1 K
E13	=E12+F16	1073.1 K
E14	=E13+F16	1073.1 K
F1	@EXP(10300/E1)*0.00003973+(B1-0.463)	0.4000
F2	@EXP(10300/E2)*0.00003973+(B1-0.463)	0.4000
F3	@EXP(10300/E3)*0.00003973+(B1-0.463)	0.4000
F4	@EXP(10300/E4)*0.00003973+(B1-0.463)	0.4000
F5	@EXP(10300/E5)*0.00003973+(B1-0.463)	0.4000
F6	@EXP(10300/E6)*0.00003973+(B1-0.463)	0.4000
F7	@EXP(10300/E7)*0.00003973+(B1-0.463)	0.4000
F8	@EXP(10300/E8)*0.00003973+(B1-0.463)	0.4000
F9	@EXP(10300/E9)*0.00003973+(B1-0.463)	0.4000
F10	@EXP(10300/E10)*0.00003973+(B1-0.463)	0.4000
F11	@EXP(10300/E11)*0.00003973+(B1-0.463)	0.4000
F12	@EXP(10300/E12)*0.00003973+(B1-0.463)	0.4000
F13	@EXP(10300/E13)*0.00003973+(B1-0.463)	0.4000
F14	@EXP(10300/E14)*0.00003973+(B1-0.463)	0.4000
F15	@EXP(10300/E15)*0.00003973+(B1-0.463)	0.4000
F16	=(E15-A3)/50	1.8190e-014 K

Spreadsheet

	A	B	C	D	E	F
1	ASR @ 1100 K *	0.2776 *	1073.1 K	0.4000	1073.1 K	0.4000
2	Temp Average ASR *	0.4000	1073.1 K	0.4000	1073.1 K	0.4000
3	1073.1 K	0.4000	1073.1 K	0.4000	1073.1 K	0.4000
4	1073.1 K	0.4000	1073.1 K	0.4000	1073.1 K	0.4000
5	1073.1 K	0.4000	1073.1 K	0.4000	1073.1 K	0.4000
6	1073.1 K	0.4000	1073.1 K	0.4000	1073.1 K	0.4000
7	1073.1 K	0.4000	1073.1 K	0.4000	1073.1 K	0.4000
8	1073.1 K	0.4000	1073.1 K	0.4000	1073.1 K	0.4000
9	1073.1 K	0.4000	1073.1 K	0.4000	1073.1 K	0.4000
10	1073.1 K	0.4000	1073.1 K	0.4000	1073.1 K	0.4000
11	1073.1 K	0.4000	1073.1 K	0.4000	1073.1 K	0.4000
12	1073.1 K	0.4000	1073.1 K	0.4000	1073.1 K	0.4000
13	1073.1 K	0.4000	1073.1 K	0.4000	1073.1 K	0.4000
14	1073.1 K	0.4000	1073.1 K	0.4000	1073.1 K	0.4000
15	1073.1 K	0.4000	1073.1 K	0.4000	1073.2 K *	0.4000
16	1073.1 K	0.4000	1073.1 K	0.4000	delta T *	1.8190e-014 K

HYPROTECH

INL
Calgary, Alberta
CANADA

Case Name:	C:\Documents and Settings\mgq\Desktop\NGNP\Vary ROT\Thermal Ne
Unit Set:	NGNP Econ
Date/Time:	Wed Aug 18 12:07:45 2010

Spreadsheet: Temp Average ASR @TPL1 (continue

Units Set: Electrolysis

Spreadsheet

17	1073.1 K	0.4000	1073.1 K	0.4000		
18	1073.1 K	0.4000	1073.1 K	0.4000		
19	1073.1 K	0.4000	1073.1 K	0.4000		
20	40.00	19.20				

Workbook: Power Cycle (TPL2)

Material Streams

Name		2 @TPL2	3 @TPL2			
Vapour Fraction		1.0000	1.0000			
Temperature	(C)	850.00	446.52			
Pressure	(MPa)	7.0000	6.8600			
Molar Flow	(kgmole/s)	66.062	66.062			
Mass Flow	(kg/s)	264.44	264.44			
Liquid Volume Flow	(m3/h)	7673	7673			
Heat Flow	(kW)	1.138e+006	5.835e+005			

Compositions

Name	2 @TPL2	3 @TPL2			
Comp Mole Frac (Hydrogen)	0.00000	0.00000			
Comp Mole Frac (H2O)	0.00000	0.00000			
Comp Mole Frac (Oxygen)	0.00000	0.00000			
Comp Mole Frac (Nitrogen)	0.00000	0.00000			
Comp Mole Frac (CO2)	0.00000	0.00000			
Comp Mole Frac (Helium)	1.00000	1.00000			
Comp Mole Frac (Methane)	0.00000	0.00000			

Energy Streams

Name		Qh @TPL2	Electric Power Out @	Ql @TPL2		
Heat Flow	(kW)	5.540e+005	2.698e+005	2.841e+005		

Unit Ops

Operation Name	Operation Type	Feeds	Products	Ignored	Calc. Level
HX @TPL2	Cooler	2 @TPL2	3 @TPL2 Qh @TPL2	No	500.0 *
SPRDSHT-1 @TPL2	Spreadsheet			No	500.0 *

Spreadsheet: SPRDSHT-1 @TPL2

Units Set: NGNP

CONNECTIONS

Imported Variables

Cell	Object	Variable Description	Value
A2	Material Stream: 2 @TPL2	Temperature	850.00 C
A6	Energy Stream: Qh @TPL2	Heat Flow	5.540e+005 kW

Exported Variables' Formula Results

Cell	Object	Variable Description	Value
A7	Electric Power Out @TPL2	Power	2.698e+005 kW
A8	Ql @TPL2	Heat Flow	2.841e+005 kW

INL Calgary, Alberta CANADA	Case Name: C:\Documents and Settings\mgq\Desktop\NGNP\Vary ROT\Thermal Ne Unit Set: NGNP Econ Date/Time: Wed Aug 18 12:07:45 2010

Spreadsheet: SPRDSHT-1 @TPL2 (continued)

Units Set: NGNP

PARAMETERS

Exportable Variables

Cell	Visible Name	Variable Description	Variable Type	Value
A1	A1: Ambient Temperature	Ambient Temperature	Temperature	21.111 C
A3	A3: Carnot Efficiency	Carnot Efficiency	---	0.7380
A4	A4: Ideal factor	Ideal factor	---	0.6600
A5	A5: Power Cycle Efficiency	Power Cycle Efficiency	---	0.4871
A7	A7: Power	Power	Power	2.698e+005 kW
A8	A8: Heat Flow	Heat Flow	Energy	2.841e+005 kW

User Variables

FORMULAS

Cell	Formula	Result
A3	=(A2-A1)/(A2+273.15)	0.7380
A5	=A3*A4	0.4871
A7	=A5*A6	2.698e+005 kW
A8	=(1-A5)*A6	2.841e+005 kW

Spreadsheet

	A	B	C	D		
1	21.111 C *					
2	850.00 C					
3	0.7380					
4	0.6600 *					
5	0.4871					
6	5.540e+005 kW					
7	2.698e+005 kW					
8	2.841e+005 kW					
9						
10						

* Specified by user.

Appendix C
Process Heat Models and Results and Results

The models of the steam and helium process heats and results in Appendix C were developed using "HYSYS.Plant" version 2.2.2 (Build 3806) from Hyprotech Ltd. on a desktop computer running Microsoft Windows XP Professional Version 2002 Service Pack 3.

C-1 Helium Process Heat

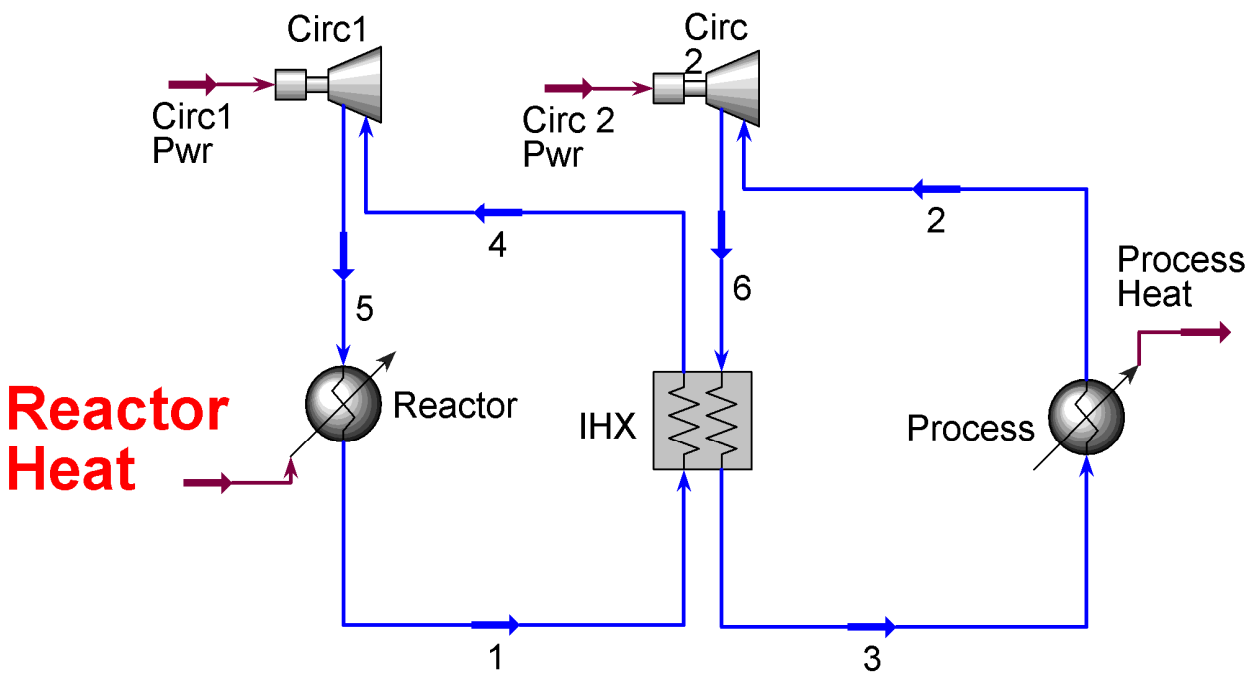

Figure C-1. Process Model of Helium Process Heat.

INL Calgary, Alberta CANADA	Case Name:	C:\Documents and Settings\mgq\Desktop\NGNP\Vary ROT\Heat Trans
	Unit Set:	NGNP Econ
	Date/Time:	Wed Aug 18 12:21:58 2010

Workbook: Case (Main)

Streams

Name		1	2	3	4	5
Vapour Fraction		1.0000	1.0000	1.0000	1.0000	1.0000
Temperature	(C)	950.00 *	480.58 *	925.00	520.78 *	536.79
Pressure	(MPa)	7.0000 *	6.8600	7.0000 *	6.8600	7.1400
Molar Flow	(kgmole/s)	69.881	69.904	69.904	69.881	69.881
Mass Flow	(kg/s)	279.73	279.82	279.82	279.73	279.73
Liquid Volume Flow	(m3/h)	8117	8120	8120	8117	8117
Heat Flow	(kW)	1.349e+006	6.669e+005	1.313e+006	7.251e+005	7.485e+005
Molar Enthalpy	(kJ/kgmole)	1.930e+004	9541	1.878e+004	1.038e+004	1.071e+004

Name		6	Circ 2 Pwr	Circ1 Pwr	Process Heat	Reactor Heat
Vapour Fraction		1.0000	---	---	---	---
Temperature	(C)	495.78	---	---	---	---
Pressure	(MPa)	7.1400	---	---	---	---
Molar Flow	(kgmole/s)	69.904	---	---	---	---
Mass Flow	(kg/s)	279.82	---	---	---	---
Liquid Volume Flow	(m3/h)	8120	---	---	---	---
Heat Flow	(kW)	6.892e+005	2.227e+004	2.343e+004	6.457e+005	6.000e+005 *
Molar Enthalpy	(kJ/kgmole)	9859	---	---	---	---

Name		RIT Goal
Vapour Fraction		---
Temperature	(C)	536.79
Pressure	(MPa)	---
Molar Flow	(kgmole/s)	---
Mass Flow	(kg/s)	---
Liquid Volume Flow	(m3/h)	---
Heat Flow	(kW)	---
Molar Enthalpy	(kJ/kgmole)	---

Composition

Name	1	2	3	4	5
Comp Mole Frac (Hydrogen)	0.00000 *	0.00000	0.00000 *	0.00000	0.00000
Comp Mole Frac (H2O)	0.00000 *	0.00000	0.00000 *	0.00000	0.00000
Comp Mole Frac (Oxygen)	0.00000 *	0.00000	0.00000 *	0.00000	0.00000
Comp Mole Frac (Nitrogen)	0.00000 *	0.00000	0.00000 *	0.00000	0.00000
Comp Mole Frac (CO2)	0.00000 *	0.00000	0.00000 *	0.00000	0.00000
Comp Mole Frac (Argon)	0.00000 *	0.00000	0.00000 *	0.00000	0.00000
Comp Mole Frac (Helium)	1.00000 *	1.00000	1.00000 *	1.00000	1.00000
Comp Mole Frac (Methane)	0.00000 *	0.00000	0.00000 *	0.00000	0.00000
Comp Mole Frac (CO)	0.00000 *	0.00000	0.00000 *	0.00000	0.00000
Comp Mole Frac (NO)	0.00000 *	0.00000	0.00000 *	0.00000	0.00000
Comp Mole Frac (NO2)	0.00000 *	0.00000	0.00000 *	0.00000	0.00000
Comp Mole Frac (N2O)	0.00000 *	0.00000	0.00000 *	0.00000	0.00000
Comp Mole Frac (N2O4)	0.00000 *	0.00000	0.00000 *	0.00000	0.00000

HYPROTECH	INL Calgary, Alberta CANADA	Case Name:	C:\Documents and Settings\mgq\Desktop\NGNP\Vary ROT\Heat Trans
		Unit Set:	NGNP Econ
		Date/Time:	Wed Aug 18 12:21:58 2010

Workbook: Case (Main) (continued)

Composition (continued)

Name	6	RIT Goal
Comp Mole Frac (Hydrogen)	0.00000	---
Comp Mole Frac (H2O)	0.00000	---
Comp Mole Frac (Oxygen)	0.00000	---
Comp Mole Frac (Nitrogen)	0.00000	---
Comp Mole Frac (CO2)	0.00000	---
Comp Mole Frac (Argon)	0.00000	---
Comp Mole Frac (Helium)	1.00000	---
Comp Mole Frac (Methane)	0.00000	---
Comp Mole Frac (CO)	0.00000	---
Comp Mole Frac (NO)	0.00000	---
Comp Mole Frac (NO2)	0.00000	---
Comp Mole Frac (N2O)	0.00000	---
Comp Mole Frac (N2O4)	0.00000	---

Coolers

Name		Process
Duty	(kW)	6.457e+005
Feed Temperature	(C)	925.0
Product Temperature	(C)	480.6 *

Heat Exchangers

Name		
Duty	(kW)	
UA	(kJ/C-h)	
LMTD	(C)	
Minimum Approach	(C)	

Heaters

Name		Reactor
Duty	(kW)	6.000e+005 *
Feed Temperature	(C)	536.8
Product Temperature	(C)	950.0 *

LNGs

Name		IHX
UA (Calculated)	(kJ/C-h)	8.979e+007
LMTD	(C)	25.00 *
Exchanger Cold Duty	(kW)	6.234e+005
Minimum Approach	(C)	25.00

Compressors

Name		Circ1	Circ 2
Feed Pressure	(MPa)	6.860	6.860
Product Pressure	(MPa)	7.140	7.140
Molar Flow	(kgmole/s)	69.88	69.90
Energy	(kW)	2.343e+004	2.227e+004
Adiabatic Efficiency		80 *	80 *
Polytropic Efficiency		80	80

HYPROTECH	INL Calgary, Alberta CANADA	Case Name: C:\Documents and Settings\mgq\Desktop\NGNP\Vary ROT\Heat Trans Unit Set: NGNP Econ Date/Time: Wed Aug 18 12:21:58 2010

Workbook: Case (Main) (continued)

Expanders

Name						
Feed Pressure	(MPa)					
Product Pressure	(MPa)					
Molar Flow	(kgmole/s)					
Energy	(kW)					
Adiabatic Efficiency						
Polytropic Efficiency						

Pumps

Name						
Delta P	(MPa)					
Energy	(kW)					
Feed Pressure	(MPa)					
Product Pressure	(MPa)					
Molar Flow	(kgmole/s)					
Adiabatic Efficiency	(%)					

Unit Ops

Operation Name	Operation Type	Feeds	Products	Ignored	Calc. Level
SPRDSHT-1	Spreadsheet			No	500.0 *
Reactor	Heater	5 Reactor Heat	1	No	500.0 *
Circ1	Compressor	4 Circ1 Pwr	5	No	500.0 *
Circ 2	Compressor	2 Circ 2 Pwr	6	No	500.0 *
Process	Cooler	3	2 Process Heat	No	500.0 *
IHX	LNG	6 1	3 4	No	500.0 *
ADJ-2	Adjust			No	3500 *
ADJ-1	Adjust			No	3500 *

Spreadsheet: SPRDSHT-1

Units Set: NGNP

CONNECTIONS

Imported Variables

Cell	Object	Variable Description	Value
A1	Energy Stream: Reactor Heat	Heat Flow	6.000e+005 kW
A2	Energy Stream: Circ1 Pwr	Power	2.343e+004 kW
A5	Material Stream: 1	Temperature	950.00 C

Exported Variables' Formula Results

Cell	Object	Variable Description	Value
A6	RIT Goal	Temperature	536.79 C

PARAMETERS

Exportable Variables

Cell	Visible Name	Variable Description	Variable Type	Value
A3	A3:		Power	<empty>
A6	A6: Temperature	Temperature	Temperature	536.79 C

HYPROTECH INL Calgary, Alberta CANADA	Case Name:	C:\Documents and Settings\mgq\Desktop\NGNP\Vary ROT\Heat Trans
	Unit Set:	NGNP Econ
	Date/Time:	Wed Aug 18 12:21:58 2010

Spreadsheet: SPRDSHT-1 (continued)

Units Set: NGNP

User Variables

FORMULAS

Cell	Formula	Result
A6	=0.820495*A5-242.676417	536.79 C

Spreadsheet

	A	B	C	D		
1	6.000e+005 kW *					
2	2.343e+004 kW					
3	<empty> *					
4						
5	950.00 C *					
6	536.79 C					
7						
8						
9						
10						

* Specified by user.

INL Calgary, Alberta CANADA	Case Name: C:\Documents and Settings\mgq\Desktop\NGNP\Vary ROT\Heat Trans Unit Set: NGNP Econ Date/Time: Wed Aug 18 12:23:07 2010

Case Study Manager: Main

Data Recorder Results: Scenario 1

State						

Case Studies: Case Study 1

Independent Variables				Dependent Variables	
Variable	Low Bound	High Bound	Step Size	Variable	Display
1 - Temperature	650.00 C *	950.00 C *	10.00 C *	5 - Temperature	Enabled
				Circ1 Pwr - Power	Enabled
				IHX - Minimum Approach	Enabled
				Circ 2 Pwr - Power	Enabled
				3 - Temperature	Enabled
				2 - Temperature	Enabled
				Process Heat - Heat Flow	Enabled
				1 - Mass Flow	Enabled
				3 - Mass Flow	Enabled

Case Studies Results

State		State 1	State 2	State 3	State 4	State 5	State 6
1 - Temperature	(C)	650.00	660.00	670.00	680.00	690.00	700.00
5 - Temperature	(C)	290.65	298.85	307.06	315.26	323.47	331.67
Circ1 Pwr - Power	(kW)	1.885e+004	1.902e+004	1.919e+004	1.936e+004	1.953e+004	1.970e+004
IHX - Minimum Approach	(C)	25.00	25.00	25.00	25.00	25.00	25.00
Circ 2 Pwr - Power	(kW)	1.766e+004	1.784e+004	1.801e+004	1.818e+004	1.835e+004	1.852e+004
3 - Temperature	(C)	625.00	635.00	645.00	655.00	665.00	675.00
2 - Temperature	(C)	244.06	251.94	259.83	267.71	275.60	283.48
Process Heat - Heat Flow	(kW)	6.365e+005	6.369e+005	6.372e+005	6.375e+005	6.379e+005	6.382e+005
1 - Mass Flow	(kg/s)	321.75	320.15	318.56	316.99	315.43	313.89
3 - Mass Flow	(kg/s)	321.88	320.27	318.69	317.11	315.55	314.01
State		State 7	State 8	State 9	State 10	State 11	State 12
1 - Temperature	(C)	710.00	720.00	730.00	740.00	750.00	760.00
5 - Temperature	(C)	339.88	348.08	356.28	364.49	372.69	380.90
Circ1 Pwr - Power	(kW)	1.987e+004	2.003e+004	2.020e+004	2.036e+004	2.052e+004	2.068e+004
IHX - Minimum Approach	(C)	25.00	25.00	25.00	25.00	25.00	25.00
Circ 2 Pwr - Power	(kW)	1.869e+004	1.886e+004	1.902e+004	1.918e+004	1.934e+004	1.950e+004
3 - Temperature	(C)	685.00	695.00	705.00	715.00	725.00	735.00
2 - Temperature	(C)	291.36	299.25	307.13	315.02	322.90	330.79
Process Heat - Heat Flow	(kW)	6.386e+005	6.389e+005	6.392e+005	6.395e+005	6.399e+005	6.402e+005
1 - Mass Flow	(kg/s)	312.37	310.85	309.36	307.88	306.41	304.95
3 - Mass Flow	(kg/s)	312.49	310.97	309.47	307.99	306.52	305.07
State		State 13	State 14	State 15	State 16	State 17	State 18
1 - Temperature	(C)	770.00	780.00	790.00	800.00	810.00	820.00
5 - Temperature	(C)	389.10	397.31	405.51	413.72	421.92	430.13
Circ1 Pwr - Power	(kW)	2.084e+004	2.099e+004	2.115e+004	2.130e+004	2.145e+004	2.160e+004
IHX - Minimum Approach	(C)	25.00	25.00	25.00	25.00	25.00	25.00
Circ 2 Pwr - Power	(kW)	1.966e+004	1.982e+004	1.997e+004	2.012e+004	2.028e+004	2.043e+004
3 - Temperature	(C)	745.00	755.00	765.00	775.00	785.00	795.00
2 - Temperature	(C)	338.67	346.55	354.44	362.32	370.21	378.09
Process Heat - Heat Flow	(kW)	6.405e+005	6.408e+005	6.411e+005	6.414e+005	6.417e+005	6.420e+005
1 - Mass Flow	(kg/s)	303.51	302.09	300.67	299.27	297.89	296.51
3 - Mass Flow	(kg/s)	303.62	302.20	300.78	299.38	297.99	296.62
State		State 19	State 20	State 21	State 22	State 23	State 24
1 - Temperature	(C)	830.00	840.00	850.00	860.00	870.00	880.00
5 - Temperature	(C)	438.33	446.54	454.74	462.95	471.15	479.36
Circ1 Pwr - Power	(kW)	2.175e+004	2.190e+004	2.204e+004	2.219e+004	2.233e+004	2.247e+004
IHX - Minimum Approach	(C)	25.00	25.00	25.00	25.00	25.00	25.00

Hyprotech Ltd. HYSYS.Plant v2.2.2 (Build 3806) Page 1 of 2

Licensed to: INL

* Specified by user.

INL
Calgary, Alberta
CANADA

Case Name:	C:\Documents and Settings\mgq\Desktop\NGNP\Vary ROT\Heat Trans
Unit Set:	NGNP Econ
Date/Time:	Wed Aug 18 12:23:07 2010

Case Study Manager: Main (continued)

Case Studies Results

Circ 2 Pwr - Power	(kW)	2.058e+004	2.072e+004	2.087e+004	2.102e+004	2.116e+004	2.130e+004
3 - Temperature	(C)	805.00	815.00	825.00	835.00	845.00	855.00
2 - Temperature	(C)	385.97	393.86	401.74	409.63	417.51	425.39
Process Heat - Heat Flow	(kW)	6.423e+005	6.426e+005	6.429e+005	6.432e+005	6.435e+005	6.438e+005
1 - Mass Flow	(kg/s)	295.15	293.80	292.46	291.14	289.83	288.52
3 - Mass Flow	(kg/s)	295.25	293.90	292.56	291.24	289.92	288.62
State		State 25	State 26	State 27	State 28	State 29	State 30
1 - Temperature	(C)	890.00	900.00	910.00	920.00	930.00	940.00
5 - Temperature	(C)	487.56	495.77	503.97	512.18	520.38	528.59
Circ1 Pwr - Power	(kW)	2.261e+004	2.275e+004	2.289e+004	2.303e+004	2.316e+004	2.330e+004
IHX - Minimum Approach	(C)	25.00	25.00	25.00	25.00	25.00	25.00
Circ 2 Pwr - Power	(kW)	2.144e+004	2.158e+004	2.172e+004	2.186e+004	2.200e+004	2.213e+004
3 - Temperature	(C)	865.00	875.00	885.00	895.00	905.00	915.00
2 - Temperature	(C)	433.28	441.16	449.05	456.93	464.81	472.70
Process Heat - Heat Flow	(kW)	6.441e+005	6.443e+005	6.446e+005	6.449e+005	6.452e+005	6.454e+005
1 - Mass Flow	(kg/s)	287.23	285.96	284.69	283.43	282.19	280.96
3 - Mass Flow	(kg/s)	287.33	286.05	284.78	283.53	282.28	281.05
State		State 31					
1 - Temperature	(C)	950.00					
5 - Temperature	(C)	536.79					
Circ1 Pwr - Power	(kW)	2.343e+004					
IHX - Minimum Approach	(C)	25.00					
Circ 2 Pwr - Power	(kW)	2.227e+004					
3 - Temperature	(C)	925.00					
2 - Temperature	(C)	480.58					
Process Heat - Heat Flow	(kW)	6.457e+005					
1 - Mass Flow	(kg/s)	279.73					
3 - Mass Flow	(kg/s)	279.82					

C-2. Steam Process Heat

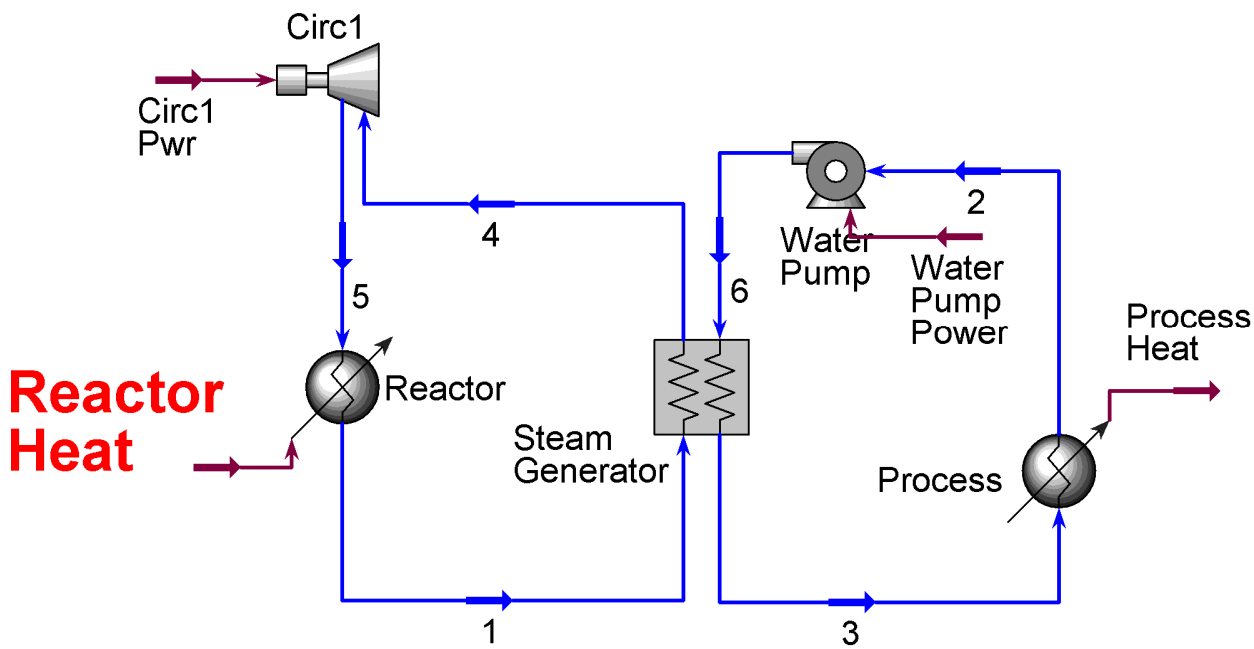

Figure C-2. Process Model of Steam Process Heat.

INL Calgary, Alberta CANADA	Case Name:	C:\Documents and Settings\mgq\Desktop\NGNP\Vary ROT\Heat Trans
	Unit Set:	NGNP Econ
	Date/Time:	Wed Aug 18 12:27:47 2010

Workbook: Case (Main)

Streams

Name		1	2	3	4	5
Vapour Fraction		1.0000	0.0000	1.0000	1.0000	1.0000
Temperature	(C)	660.00 *	257.34	550.00 *	287.54 *	298.85
Pressure	(MPa)	7.0000 *	16.660	17.000 *	6.8600	7.1400
Molar Flow	(kgmole/s)	79.977	15.320	15.320	79.977	79.977
Mass Flow	(kg/s)	320.15	275.99	275.99	320.15	320.15
Liquid Volume Flow	(m3/h)	9290	995.6	995.6	9290	9290
Heat Flow	(kW)	1.061e+006	-4.074e+006	-3.455e+006	4.423e+005	4.613e+005
Molar Enthalpy	(kJ/kgmole)	1.327e+004	-2.660e+005	-2.255e+005	5530	5768

Name		6	Circ1 Pwr	Process Heat	RIT Goal	Reactor Heat
Vapour Fraction		0.0000	---	---	---	---
Temperature	(C)	257.58	---	---	298.85	---
Pressure	(MPa)	17.340	---	---	---	---
Molar Flow	(kgmole/s)	15.320	---	---	---	---
Mass Flow	(kg/s)	275.99	---	---	---	---
Liquid Volume Flow	(m3/h)	995.6	---	---	---	---
Heat Flow	(kW)	-4.074e+006	1.902e+004	6.193e+005	---	6.000e+005 *
Molar Enthalpy	(kJ/kgmole)	-2.659e+005	---	---	---	---

Name		Sat Pres	Water Pump Power			
Vapour Fraction		1.0000 *	---			
Temperature	(C)	351.52	---			
Pressure	(MPa)	17.000	---			
Molar Flow	(kgmole/s)	---	---			
Mass Flow	(kg/s)	---	---			
Liquid Volume Flow	(m3/h)	---	---			
Heat Flow	(kW)	---	311.0			
Molar Enthalpy	(kJ/kgmole)	-2.383e+005	---			

Composition

Name	1	2	3	4	5
Comp Mole Frac (Hydrogen)	0.00000 *	0.00000	0.00000 *	0.00000	0.00000
Comp Mole Frac (H2O)	0.00000 *	1.00000	1.00000 *	0.00000	0.00000
Comp Mole Frac (Oxygen)	0.00000 *	0.00000	0.00000 *	0.00000	0.00000
Comp Mole Frac (Nitrogen)	0.00000 *	0.00000	0.00000 *	0.00000	0.00000
Comp Mole Frac (CO2)	0.00000 *	0.00000	0.00000 *	0.00000	0.00000
Comp Mole Frac (Argon)	0.00000 *	0.00000	0.00000 *	0.00000	0.00000
Comp Mole Frac (Helium)	1.00000 *	0.00000	0.00000 *	1.00000	1.00000
Comp Mole Frac (Methane)	0.00000 *	0.00000	0.00000 *	0.00000	0.00000
Comp Mole Frac (CO)	0.00000 *	0.00000	0.00000 *	0.00000	0.00000
Comp Mole Frac (NO)	0.00000 *	0.00000	0.00000 *	0.00000	0.00000
Comp Mole Frac (NO2)	0.00000 *	0.00000	0.00000 *	0.00000	0.00000
Comp Mole Frac (N2O)	0.00000 *	0.00000	0.00000 *	0.00000	0.00000
Comp Mole Frac (N2O4)	0.00000 *	0.00000	0.00000 *	0.00000	0.00000

INL Calgary, Alberta CANADA	Case Name:	C:\Documents and Settings\mgq\Desktop\NGNP\Vary ROT\Heat Trans
	Unit Set:	NGNP Econ
	Date/Time:	Wed Aug 18 12:27:47 2010

Workbook: Case (Main) (continued)

Composition (continued)

Name	6	RIT Goal	Sat Pres		
Comp Mole Frac (Hydrogen)	0.00000	---	0.00000 *		
Comp Mole Frac (H2O)	1.00000	---	1.00000 *		
Comp Mole Frac (Oxygen)	0.00000	---	0.00000 *		
Comp Mole Frac (Nitrogen)	0.00000	---	0.00000 *		
Comp Mole Frac (CO2)	0.00000	---	0.00000 *		
Comp Mole Frac (Argon)	0.00000	---	0.00000 *		
Comp Mole Frac (Helium)	0.00000	---	0.00000 *		
Comp Mole Frac (Methane)	0.00000	---	0.00000 *		
Comp Mole Frac (CO)	0.00000	---	0.00000 *		
Comp Mole Frac (NO)	0.00000	---	0.00000 *		
Comp Mole Frac (NO2)	0.00000	---	0.00000 *		
Comp Mole Frac (N2O)	0.00000	---	0.00000 *		
Comp Mole Frac (N2O4)	0.00000	---	0.00000 *		

Coolers

Name		Process				
Duty	(kW)	6.193e+005				
Feed Temperature	(C)	550.0 *				
Product Temperature	(C)	257.3				

Heat Exchangers

Name						
Duty	(kW)					
UA	(kJ/C-h)					
LMTD	(C)					
Minimum Approach	(C)					

Heaters

Name		Reactor				
Duty	(kW)	6.000e+005 *				
Feed Temperature	(C)	298.9				
Product Temperature	(C)	660.0 *				

LNGs

Name		Steam Generator				
UA (Calculated)	(kJ/C-h)	3.430e+007				
LMTD	(C)	64.98 *				
Exchanger Cold Duty	(kW)	6.190e+005				
Minimum Approach	(C)	25.00				

Compressors

Name		Circ1				
Feed Pressure	(MPa)	6.860				
Product Pressure	(MPa)	7.140				
Molar Flow	(kgmole/s)	79.98				
Energy	(kW)	1.902e+004				
Adiabatic Efficiency		80 *				
Polytropic Efficiency		80				

INL Calgary, Alberta CANADA	Case Name:	C:\Documents and Settings\mgq\Desktop\NGNP\Vary ROT\Heat Trans
	Unit Set:	NGNP Econ
	Date/Time:	Wed Aug 18 12:27:47 2010

Workbook: Case (Main) (continued)

Expanders

Name						
Feed Pressure	(MPa)					
Product Pressure	(MPa)					
Molar Flow	(kgmole/s)					
Energy	(kW)					
Adiabatic Efficiency						
Polytropic Efficiency						

Pumps

Name		Water Pump				
Delta P	(MPa)	0.6800				
Energy	(kW)	311.0				
Feed Pressure	(MPa)	16.66				
Product Pressure	(MPa)	17.34				
Molar Flow	(kgmole/s)	15.32				
Adiabatic Efficiency	(%)	75.00 *				

Unit Ops

Operation Name	Operation Type	Feeds	Products	Ignored	Calc. Level
SPRDSHT-1	Spreadsheet			No	500.0 *
Reactor	Heater	5 Reactor Heat	1	No	500.0 *
Circ1	Compressor	4 Circ1 Pwr	5	No	500.0 *
Process	Cooler	3	2 Process Heat	No	500.0 *
Steam Generator	LNG	6 1	3 4	No	500.0 *
Water Pump	Pump	2 Water Pump Power	6	No	500.0 *
SET-1	Set			No	500.0 *
ADJ-2	Adjust			No	3500 *

Spreadsheet: SPRDSHT-1

Units Set: NGNP

CONNECTIONS

Imported Variables

Cell	Object		Variable Description	Value
A1	Energy Stream:	Reactor Heat	Heat Flow	6.000e+005 kW
A2	Energy Stream:	Circ1 Pwr	Power	1.902e+004 kW
A5	Material Stream:	1	Temperature	660.00 C
B2	Material Stream:	1	Temperature	660.00 C
C2	Material Stream:	5	Temperature	298.85 C
D2	Material Stream:	1	Mass Flow	320.15 kg/s
E2	LNG:	Steam Generator	Exchanger Cold Duty	6.190e+005 kW
F2	LNG:	Steam Generator	Minimum Approach	25.00 C
G2	Energy Stream:	Process Heat	Heat Flow	6.193e+005 kW
H2	Material Stream:	3	Mass Flow	275.99 kg/s
I2	Material Stream:	3	Temperature	550.00 C
J2	Material Stream:	2	Temperature	257.34 C
K2	Material Stream:	3	Pressure	17.000 MPa
L2	Material Stream:	Sat Pres	Temperature	351.52 C
B4	Material Stream:	1	Pressure	7.0000 MPa

* Specified by user.

INL Calgary, Alberta CANADA	Case Name:	C:\Documents and Settings\mgq\Desktop\NGNP\Vary ROT\Heat Trans
	Unit Set:	NGNP Econ
	Date/Time:	Wed Aug 18 12:27:47 2010

Spreadsheet: SPRDSHT-1 (continued)

Units Set: NGNP

CONNECTIONS

Imported Variables

Cell	Object	Variable Description	Value
C4	Material Stream: 3	Pressure	17.000 MPa

Exported Variables' Formula Results

Cell	Object	Variable Description	Value
A6	RIT Goal	Temperature	298.85 C
B5	Reactor	Pressure Drop	0.1400 MPa
B6	Steam Generator	Side Pressure Drop (Side Pressure Drop_2)	0.1400 MPa
C5	Steam Generator	Side Pressure Drop (Side Pressure Drop_1)	0.3400 MPa
C6	Process	Pressure Drop	0.3400 MPa

PARAMETERS

Exportable Variables

Cell	Visible Name	Variable Description	Variable Type	Value
A3	A3:		Power	<empty>
A4	A4:		---	<empty>
A6	A6: Temperature	Temperature	Temperature	298.85 C
B5	B5: Pressure Drop	Pressure Drop	Delta Pressure	0.1400 MPa
B6	B6: Side Pressure Drop (Side Pressure Drop_2	Side Pressure Drop (Side Pressure Drop_2)	Delta Pressure	0.1400 MPa
B7	B7:		---	650.0
B8	B8:		---	650.0
B9	B9:		---	650.0
B10	B10:		---	650.0
C5	C5: Side Pressure Drop (Side Pressure Drop_1	Side Pressure Drop (Side Pressure Drop_1)	Delta Pressure	0.3400 MPa
C6	C6: Pressure Drop	Pressure Drop	Delta Pressure	0.3400 MPa
C7	C7:		---	290.6
C8	C8:		---	290.6
C9	C9:		---	290.6
C10	C10:		---	290.6
D3	D3:		---	<empty>
D7	D7:		---	321.7
D8	D8:		---	321.7
D9	D9:		---	321.7
D10	D10:		---	321.7
E3	E3:		---	<empty>
E7	E7:		---	6.188e+005
E8	E8:		---	6.188e+005
E9	E9:		---	6.188e+005
E10	E10:		---	6.188e+005
F3	F3:		---	<empty>
F7	F7:		---	25.00
F8	F8:		---	110.0
F9	F9:		---	25.00
F10	F10:		---	57.00
G3	G3:		---	<empty>
G7	G7:		---	6.191e+005
G8	G8:		---	6.190e+005
G9	G9:		---	6.192e+005
G10	G10:		---	6.191e+005
H3	H3:		---	<empty>
H7	H7:		---	272.4
H8	H8:		---	192.5

INL Calgary, Alberta CANADA	Case Name:	C:\Documents and Settings\mgq\Desktop\NGNP\Vary ROT\Heat Trans
	Unit Set:	NGNP Econ
	Date/Time:	Wed Aug 18 12:27:47 2010

Spreadsheet: SPRDSHT-1 (continued)

Units Set: NGNP

PARAMETERS

Exportable Variables

Cell	Visible Name	Variable Description	Variable Type	Value
H9	H9:		---	262.1
H10	H10:		---	188.7
I3	I3:		---	<empty>
I7	I7:		---	540.0
I8	I8:		---	540.0
I9	I9:		---	593.0
I10	I10:		---	593.0
J3	J3:		---	<empty>
J7	J7:		---	246.6
J8	J8:		---	40.00
J9	J9:		---	243.1
J10	J10:		---	40.00
K3	K3:		---	<empty>
K7	K7:		---	17.00
K8	K8:		---	17.00
K9	K9:		---	24.00
K10	K10:		---	24.00
L3	L3:		---	<empty>
L7	L7:		---	351.5
L8	L8:		---	351.5
L9	L9:		---	<empty>
L10	L10:		---	<empty>

User Variables

FORMULAS

Cell	Formula	Result
A4	=(A3-A2)/A1	<empty>
A6	=0.820495*A5-242.676417	298.85 C
B5	=B4*.02	0.1400 MPa
B6	=B5	0.1400 MPa
C5	=.02*C4	0.3400 MPa
C6	=C5	0.3400 MPa

Spreadsheet

	A	B	C	D	E	F
1	6.000e+005 kW *	ROT *	RIT *	Primary mass flow *	SG Duty *	SG Min App *
2	1.902e+004 kW	660.00 C *	298.85 C	320.15 kg/s	6.190e+005 kW	25.00 C
3	<empty> *			<empty> *	<empty> *	<empty> *
4	<empty>	7.0000 MPa *	17.000 MPa *			
5	660.00 C *	0.1400 MPa	0.3400 MPa			
6	298.85 C	0.1400 MPa	0.3400 MPa			
7		650.0 *	290.6 *	321.7 *	6.188e+005 *	25.00 *
8		650.0 *	290.6 *	321.7 *	6.188e+005 *	110.0 *
9		650.0 *	290.6 *	321.7 *	6.188e+005 *	25.00 *
10		650.0 *	290.6 *	321.7 *	6.188e+005 *	57.00 *

	G	H	I	J	K	L
1	Process Heat Duty *	Steam flow *	T In Process *	T Out Process *	Steam Pres *	Sat Pres *
2	6.193e+005 kW	275.99 kg/s	550.00 C *	257.34 C	17.000 MPa *	351.52 C
3	<empty> *	<empty> *	<empty> *	<empty> *	<empty> *	<empty> *
4						
5						

Hyprotech Ltd. HYSYS.Plant v2.2.2 (Build 3806) Page 5 of 6

Licensed to: INL

* Specified by user.

INL
Calgary, Alberta
CANADA

Case Name:	C:\Documents and Settings\mgq\Desktop\NGNP\Vary ROT\Heat Trans
Unit Set:	NGNP Econ
Date/Time:	Wed Aug 18 12:27:47 2010

Spreadsheet: SPRDSHT-1 (continued)

Units Set: NGNP

Spreadsheet

6						
7	6.191e+005 *	272.4 *	540.0 *	246.6 *	17.00 *	351.5 *
8	6.190e+005 *	192.5 *	540.0 *	40.00 *	17.00 *	351.5 *
9	6.192e+005 *	262.1 *	593.0 *	243.1 *	24.00 *	<empty> *
10	6.191e+005 *	188.7 *	593.0 *	40.00 *	24.00 *	<empty> *

* Specified by user.

INL Calgary, Alberta CANADA	Case Name: C:\Documents and Settings\mgq\Desktop\NGNP\Vary ROT\Heat Trans Unit Set: NGNP Econ Date/Time: Wed Aug 18 12:29:26 2010

Case Study Manager: Main

Data Recorder Results:

State						

Case Studies: Case Study 2

Independent Variables				Dependent Variables	
Variable	Low Bound	High Bound	Step Size	Variable	Display
1 - Temperature	770.00 C *	950.00 C *	10.00 C *	5 - Temperature	Enabled
				1 - Mass Flow	Enabled
				Circ1 Pwr - Power	Enabled
				Steam Generator - Minimum Approach	Enabled
				3 - Temperature	Enabled
				2 - Temperature	Enabled
				3 - Mass Flow	Enabled
				Process Heat - Heat Flow	Enabled
				Water Pump Power - Power	Enabled

Case Studies Results

State		State 1	State 2	State 3	State 4	State 5	State 6
1 - Temperature	(C)	770.00	780.00	790.00	800.00	810.00	820.00
5 - Temperature	(C)	389.10	397.31	405.51	413.72	421.92	430.13
1 - Mass Flow	(kg/s)	303.51	302.09	300.67	299.27	297.89	296.51
Circ1 Pwr - Power	(kW)	2.084e+004	2.099e+004	2.115e+004	2.130e+004	2.145e+004	2.160e+004
Steam Generator - Minimum Approach	(C)	25.24	33.29	41.33	49.37	57.42	65.46
3 - Temperature	(C)	550.00	550.00	550.00	550.00	550.00	550.00
2 - Temperature	(C)	349.84	349.84	349.84	349.84	349.84	349.84
3 - Mass Flow	(kg/s)	395.52	395.64	395.74	395.83	395.93	396.02
Process Heat - Heat Flow	(kW)	6.214e+005	6.216e+005	6.217e+005	6.219e+005	6.220e+005	6.222e+005
Water Pump Power - Power	(kW)	596.3	596.5	596.7	596.8	596.9	597.1
State		State 7	State 8	State 9	State 10	State 11	State 12
1 - Temperature	(C)	830.00	840.00	850.00	860.00	870.00	880.00
5 - Temperature	(C)	438.33	446.54	454.74	462.95	471.15	479.36
1 - Mass Flow	(kg/s)	295.15	293.80	292.46	291.14	289.83	288.52
Circ1 Pwr - Power	(kW)	2.175e+004	2.190e+004	2.204e+004	2.219e+004	2.233e+004	2.247e+004
Steam Generator - Minimum Approach	(C)	73.50	81.54	89.59	97.63	105.7	113.7
3 - Temperature	(C)	550.00	550.00	550.00	550.00	550.00	550.00
2 - Temperature	(C)	349.84	349.84	349.84	349.84	349.84	349.84
3 - Mass Flow	(kg/s)	396.12	396.21	396.31	396.40	396.49	396.58
Process Heat - Heat Flow	(kW)	6.223e+005	6.225e+005	6.226e+005	6.228e+005	6.229e+005	6.231e+005
Water Pump Power - Power	(kW)	597.2	597.4	597.5	597.7	597.8	597.9
State		State 13	State 14	State 15	State 16	State 17	State 18
1 - Temperature	(C)	890.00	900.00	910.00	920.00	930.00	940.00
5 - Temperature	(C)	487.56	495.77	503.97	512.18	520.38	528.59
1 - Mass Flow	(kg/s)	287.23	285.96	284.69	283.43	282.19	280.96
Circ1 Pwr - Power	(kW)	2.261e+004	2.275e+004	2.289e+004	2.303e+004	2.316e+004	2.330e+004
Steam Generator - Minimum Approach	(C)	121.8	129.8	137.8	145.9	153.9	162.0
3 - Temperature	(C)	550.00	550.00	550.00	550.00	550.00	550.00
2 - Temperature	(C)	349.84	349.84	349.84	349.84	349.84	349.84
3 - Mass Flow	(kg/s)	396.67	396.76	396.85	396.93	397.02	397.11
Process Heat - Heat Flow	(kW)	6.232e+005	6.234e+005	6.235e+005	6.236e+005	6.238e+005	6.239e+005
Water Pump Power - Power	(kW)	598.1	598.2	598.3	598.5	598.6	598.7
State		State 19					
1 - Temperature	(C)	950.00					
5 - Temperature	(C)	536.79					
1 - Mass Flow	(kg/s)	279.73					
Circ1 Pwr - Power	(kW)	2.343e+004					

Hyprotech Ltd. HYSYS.Plant v2.2.2 (Build 3806) Page 1 of 2

Licensed to: INL

* Specified by user.

INL
Calgary, Alberta
CANADA

Case Name:	C:\Documents and Settings\mgq\Desktop\NGNP\Vary ROT\Heat Trans
Unit Set:	NGNP Econ
Date/Time:	Wed Aug 18 12:29:26 2010

Case Study Manager: Main (continued)

Case Studies Results

Steam Generator - Minimum Approach	(C)	170.0					
3 - Temperature	(C)	550.00					
2 - Temperature	(C)	349.84					
3 - Mass Flow	(kg/s)	397.19					
Process Heat - Heat Flow	(kW)	6.240e+005					
Water Pump Power - Power	(kW)	598.9					