Next Generation Nuclear Plant Project

Senior Advisory Group Meeting
and Alliance Working Meeting

Washington DC

July 30, 2009

Meeting Minutes

NGNP Senior Advisory Group and Alliance Working Group
July 30, 2009 Meeting Minutes

Attendees

Senior Advisory Group (SAG) and Alliance
Steve Melancon (Entergy) – Meeting Chairman
Phil Hildebrandt (BEA)
Prismatic Team
    Finis Southworth (AREVA)
    Mark Haynes (GA)
    Farshid Shahrokhi (AREVA) – by phone
    Arkal Shenoy, Tim Bertch, Ken Schultz – by phone
Pebble Team
    Regis Matzie, Jeff Harper – WEC
    Ed Wallace, Dan Mears (PBMR)
Mark Elliott (B&W)
John Kessler (EPRI)

INL – Participated in SAG meeting only
Greg Gibbs
Dave Petti
Vince Tonc
Larry Demick

Agenda

The meeting agenda is provided in Attachment #1. The meeting was divided into two parts; a SAG meeting and an Alliance working meeting

SAG Meeting Objectives

Reach agreement on the reference configurations that will be the basis for ongoing tasks being conducted by the vendor teams, conceptual design work when approved by DOE and for the proposal to DOE, whether in response to DOE's prospective FOA or an unsolicited proposal.

Reach agreement on the reference fuel(s) being advanced by the two vendor teams

SAG Meeting Agreements

1. The NGNP Project will continue to pursue two reference configurations for Conceptual Design as recommended by the pebble and prismatic vendor teams:

    - The Pebble Team will pursue an indirect[1] configuration using a pebble bed reactor design and a secondary gas loop using steam as the heat transport fluid. The thermal rating of the reactor is up to 250MWt. A steam generator transfers

[1] For the purposes of this discussion an indirect configuration is defined as one in which energy is transferred from the primary helium loop to one or more secondary loops that supply the energy conversion processes, (i.e., in the indirect configuration no energy conversion occurs in the primary loop.

the heat from the primary loop in the form of steam that then supplies the energy conversion processes, (e.g., steam turbine electrical generator, process steam demands). The PBMR reference design presentation on behalf of the Pebble Team is provided in Attachment #2.

- The Prismatic Team will pursue an indirect configuration using a prismatic block reactor design with a secondary loop using steam as the heat transport fluid. The thermal rating of the reactor is up to 615MWt. Two parallel steam generators transfer the heat from the primary loop in the form of steam that then supplies the energy conversion processes, (e.g., steam turbine electrical generator, process steam demands). The AREVA reference design presentation on behalf of the Prismatic Team is in Attachment #3.

- The Prismatic Team expressed uncertainty regarding the market applications and whether the Alliance sufficiently understands the end-user energy market to draw conclusions regarding preferable modular unit size (e.g., 350 MWt versus largest achievable) and energy supply capability (e.g., cogeneration of process steam and electricity versus also having capability for delivering hot gas) as the reference for the initial design/product offering. It was agreed that an early trade study will be performed to confirm the reference Prismatic configuration.

2. The Group recognized that the Pebble Team has adopted the UO2 based fuel particle for initial deployment and is open to adopting the UCO based fuel particle as an enhancing technology when it is qualified. Likewise, the Group recognized that the Prismatic Team has adopted the UCO based fuel particle for initial deployment with UO2 serving as a fallback. The Group also recognized that there could be materially different licensing schedules for the associated design/fuel combinations depending on the qualification program required by the NRC and the availability of fuel performance information to support plant design and safety analyses. Further discussion will be necessary to better understand the impact of these differences on the licensing strategy.

Phil Hildebrandt led a discussion with regard to the key issues that arise from the above size and configuration approach. These issues need to be addressed by the Alliance in the proposal with the acceptance of the two reference design configurations. See Attachment #4.

Alliance Working Meeting Objectives

Recap the latest round of meetings on the Hill and with DOE in support of the NGNP Project plus follow-up actions.

Status the Alliance Operating Agreement

Discuss Proposal related issues

Alliance Working Meeting Agreements

1. The meetings in support of the NGNP Project on the Hill and with DOE are provided in Attachment #5. Follow-up actions are provided in Attachment #6.

2. Steve Melancon reported that the draft Operating Agreement will be distributed during the week of August 4th.

3. The Group agreed that the scope of the "Project" to be addressed in the proposal is limited to the design, licensing, enabling technology development, construction, startup and initial operations, plus design certification. Worthy enhancing design and technology development, e.g. IHX, will be identified, but not included in the cost of the "Project". Phil Hildebrandt will re-distribute the informal backup report supporting the Project's latest cost estimates.

   The Group agreed to propose that the conceptual design be initiated asap via the existing contracts, letter contract or some other suitable arrangement, while the proposal is being evaluated and related negotiations are undertaken. Issues of technology development management, the Alliance staffing plans, and whether a TIA or cooperative agreement would be sought were discussed.

   Steve Melancon will convene a working meeting to advance the proposal in the near future. The date is TBD. A target date of for the submittal of the unsolicited proposal is the end of September.

Attachment 1 – Meeting Agenda

S:\40 PBMR
PHP-Outreach_Pro

Attachment 2 - Pebble Team Presentation

C:\Documents and
Settings\AdmAsst\

Attachment 3 – Prismatic Team Presentation

C:\Documents and
Settings\AdmAsst\

Attachment 4 – Issues from July 30, 2009 SAG Meeting Agreements

S:\40 PBMR
PHP-Outreach_Pro

Attachment 5 – Meetings on the Hill and with DOE

S:\40 PBMR
PHP-Outreach_Pro

Attachment 6 - Budget Support Actions

S:\40 PBMR
PHP-Outreach_Pro

NGNP Project
Senior Advisory Group Meeting

July 30, 2009

Agenda

1. Proposed Conceptual Design Review & Discussion

2. Reference Fuel for NGNP Initial Design & Licensing

3. Recap Recent Visits to Capitol Hill & Future Near Term Visits suggested

4. Status on Strawman LLC Operating Agreement

5. Proposal Preparation Discussion
    a. Key Inputs Required
    b. Targeted Schedule for Inputs and Drafts
    c. Logistics for Reviews & Approvals

6. Other ?

New PBMR Product Strategy

NGNP SAG Meeting

July 29, 2009

Copyright PBMR 2009

P B M R

Introduction

- Reasons why PBMR decided to revise its product strategy:
  - Funding constraints caused by the global financial credit crisis
  - To commercialize the direct Brayton cycle implied a longer time to market due to First-of-a-Kind technology
  - Strong interest for PBMRs in the process heat/cogeneration market (Sasol, Oil Sands Producers, Dow, others)
  - Best business case (fast-to-market, low risk, competitive) product for initial deployment delivers either process steam or electricity or both

Copyright PBMR 2009

PBMR Is Market Driven

- **PBMR Value Proposition**
  - Small increments of capacity, short construction schedule – easier financing
  - High temperature capability/high thermal efficiency
  - High performance/availability with on-line refueling
  - Enhanced safety, siting, and acceptance
- **PBMR Markets**
  - Electricity generation where small market conditions prevail, including limited financing, transmission or cooling water resources – focus of Demonstration (reference) plant in South Africa
  - Broad range of process steam/cogeneration applications – focus of first fleet deployment in South Africa and the US NGNP Project
- **Market Drivers**
  - Economic hedge for projected fossil fuel price volatility and CO_2 limitations/costs penalties
  - New customers beyond traditional electricity

Copyright PBMR 2009

Target Process Heat Applications

- **Coal to Liquid or Gaseous Fuels**
  - Process Steam for Coal Gasification
  - Hydrogen Upgrades
- **Petrochemicals, Ammonia/Fertilizer, Refineries**
  - Process Steam – Heating, Mechanical, Injection
  - Process Reactors, Crackers, Reformers
  - Hydrogen Upgrades
- **Oil Sands Recovery**
  - Process Steam Injection
  - Hydrogen Upgrades
- **Bulk Hydrogen for Future Transport**
- **For all the Above, Cogeneration and Water Desalination Opportunities**

Coal to Liquids

Methane Reforming

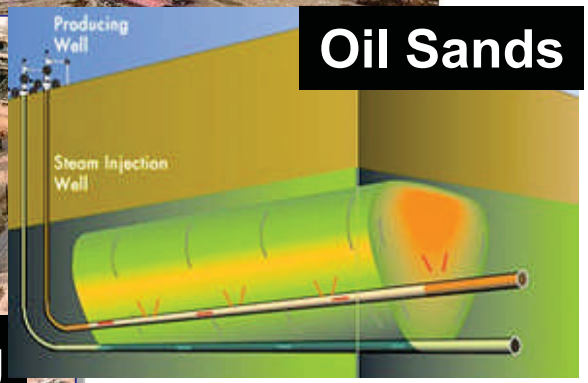

Oil Sands

Desalination

Copyright PBMR 2009 July 29, 2009

P B M R

Purpose Statement for New Product Selection

Select the configuration of a PBMR reference plant based on a standard NHSS that is suitable for a range of power generation and/or process steam applications and sites. The reference plant design should be suitable for deployment as a first-of-a-fleet commercial plant.

Copyright PBMR 2009

P B M R

Design criteria

- Safe and licensable
- Satisfy customer requirements
  - Maintainability, Flexibility, Operability, Reliability
- Attractive Economics
  - Cost, Availability, Constructability (modularization, transportability)
- Low technical risk
- Minimize time to market
- Maximise market potential

Given a safe plant, costs and risks are the major issues that need to be optimized

Copyright PBMR 2009

Major decisions

- Plant configuration
  - Necessity of intermediate loop (to mitigate water ingress risk and risk of tritium diffusion into the steam cycle)
  - Viability of a steam generator in primary loop
  - Super critical or subcritical
  - Reheat or no reheat cycle
- Single or multi reactor plant
- Reactor size and design

Copyright PBMR 2009

P B M R

Major decisions (1)

- Necessity of intermediate loop
  - An intermediate loop is not necessary from either a water ingress or a tritium diffusion point of view. This allows for the simplest cycle design and most cost competitive plant – assuming ROT <800C.
  - An intermediate loop adds control complexity and increases the number of components. The risk is further increased by adding an IHX that requires development work.
  - Previous studies have shown an intermediate loop not be an effective barrier against tritium. Tritium can be reduced more successfully through material selection in the primary loop, removal in the Helium Purification System and coatings on the SG tubes.
  - An additional barrier to the process steam can be added with a reboiler in the secondary steam loop.

Copyright PBMR 2009

Major decisions (2)

- Viability of placing a SG directly in the primary loop
  - Placing a SG in the primary loop is common practice in the gas-cooled reactor industry and there is ample experience following this practice
  - Pebble bed core can be designed to accommodate the reactivity increase due to water ingress without incurring a more frequent refuelling penalty. This can be done by lowering the heavy metal loading in each sphere (i.e. adding less coated fuel particles) and on-line refuelling.
  - The Helium Purification System is also designed to remove moisture from the primary loop after a water ingress event in a short time to limit damage to the components.
  - The fuel spheres have a 5 mm fuel free graphite layer that allows for corrosion due to water ingress without exposing any fuel particles.
  - Prompt isolation valves required to minimize ingress and related downtime, but not required to be safety related.

Copyright PBMR 2009

Major decisions (3)

- Super critical or subcritical
  - Select a conventional subcritical cycle for first generation plants
  - A super critical cycle can be considered for next generation plants
- Reheat or no reheat
  - Select a non-reheat cycle to reduce complexity and increase reliability of the steam generator
- Single or multi reactor plant
  - Multi reactor unit plants are feasible and improve economics via learning plus shared facilities and staff

Copyright PBMR 2009

P B M R

Revised Product Strategy (3)

- Reactor size and design
  - Use the largest possible cylindrical core design that will still give sufficient margins – 200 to 250 MWt reactor similar to the German HTR MODUL design and current Chinese HTR-PM design
  - Rationale for decision:
    - Stay within existing design bases to reduce technical and licensing risks - least risk approach for near term deployment
    - Decreased complexity in core structures
    - Cylindrical core has a lower pressure loss through the bed that results in a smaller circulator size and associated house load.
    - Improved transportability – All components/modules are heavy road shippable and all but RPV and Core Barrel are rail shippable
    - Brayton cycle favours larger reactor size – Process heat cycle optimized per economics and market matchups

Copyright PBMR 2009

NHSS Cutaway

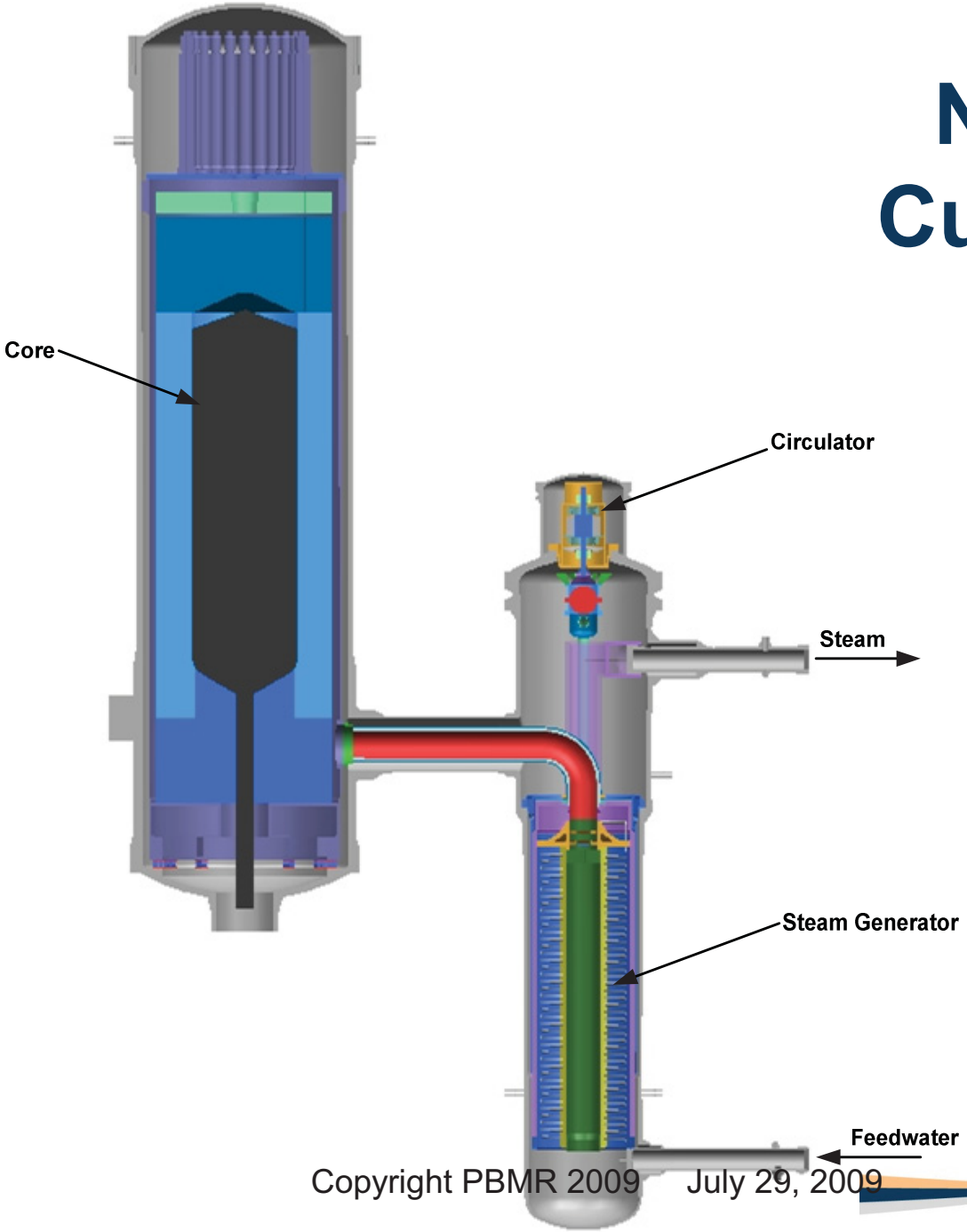

Copyright PBMR 2009

Plant Layout of 2 x 250MWt Reactors

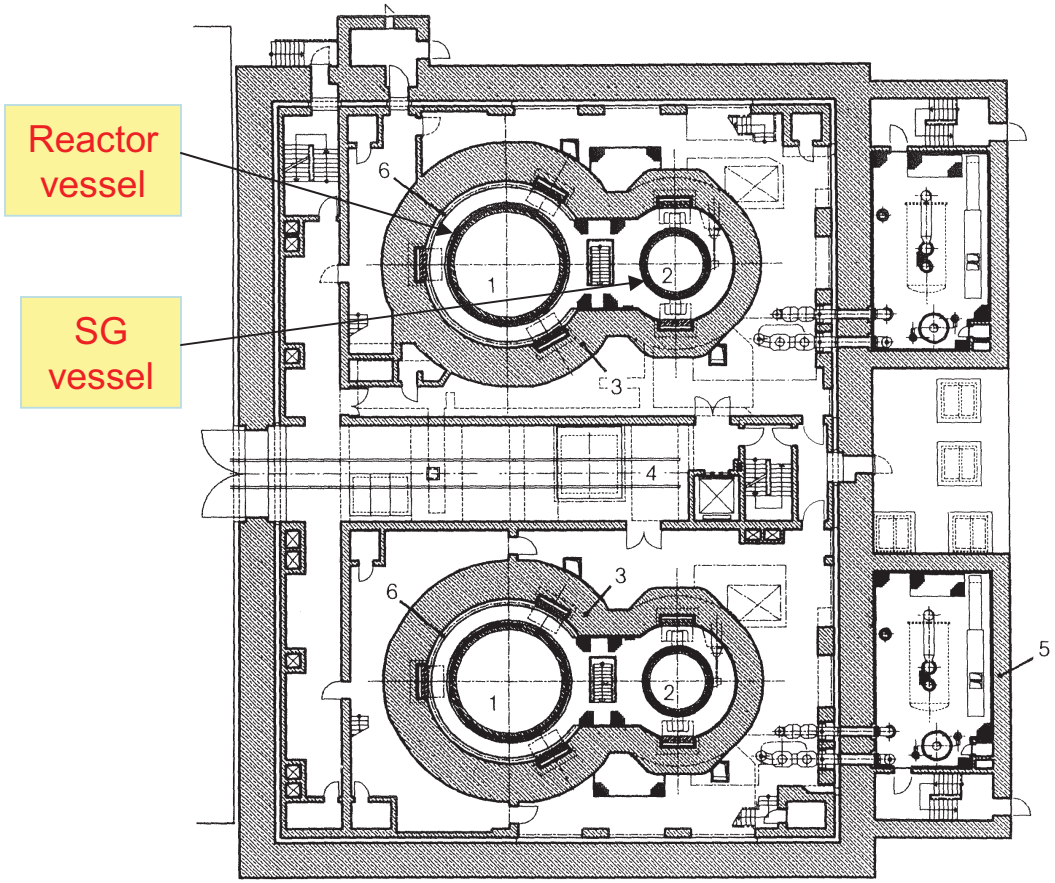

Copyright PBMR 2009 July 29, 2009

P B M R

Layout of 2 x 250MWt reactors vs 1 x 500MWt reactor

2 x 250MWt

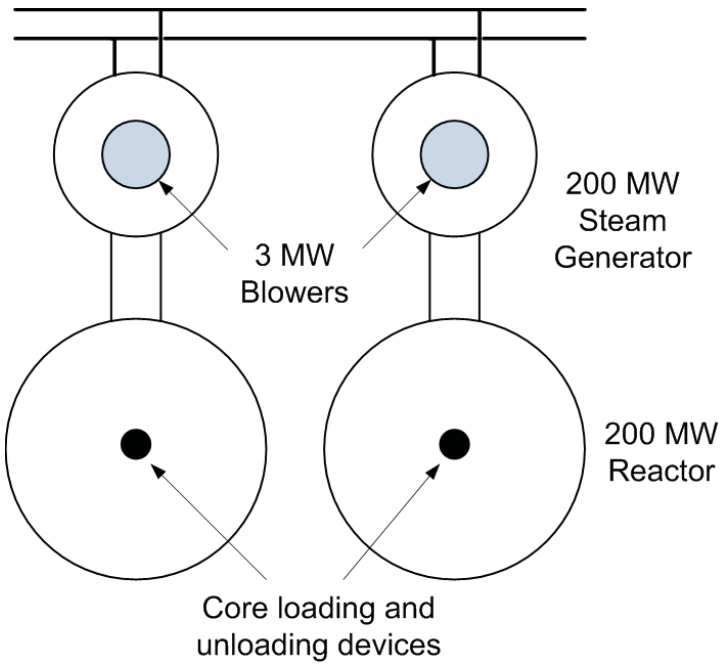

1 x 500MWt

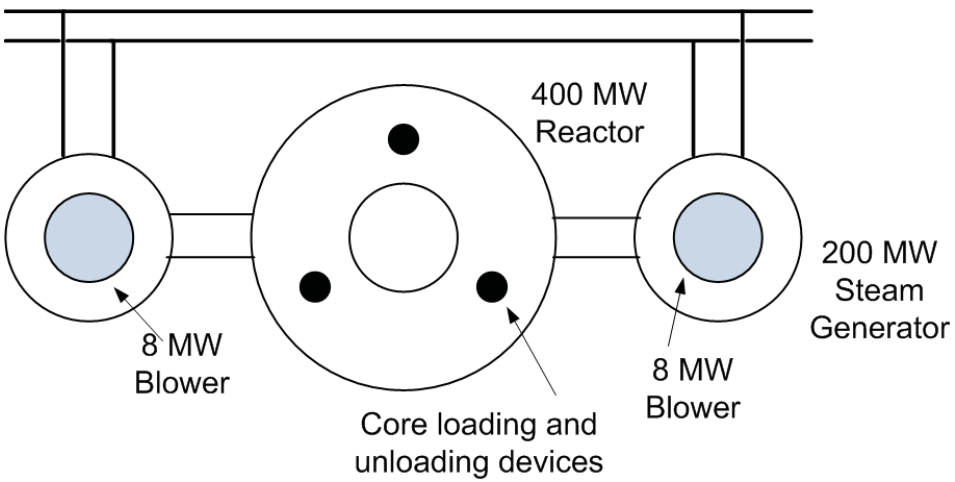

PBMR Key Technology

Building on the DPP-GT experience, PBMR has developed the technology and know-how to design, integrate, test and manufacture the full range of process heat cogeneration (PH/C) applications.

TECHNOLOGY	DPP	PH/C
Pebble bed reactor	✓	✓
Hot gas ducts	✓	✓
Gas-to-gas heat exchangers	✓	✓
Helium gas turbine	✓	X
Circulators	✓	✓
Gas-to-water heat exchangers	✓	✓
Fuel handling	✓	✓
Helium handling	✓	✓
Steam generator	X	✓

Copyright PBMR 2009

SA Demonstration Plant – Electricity plus Low Temperature Steam for Desalination

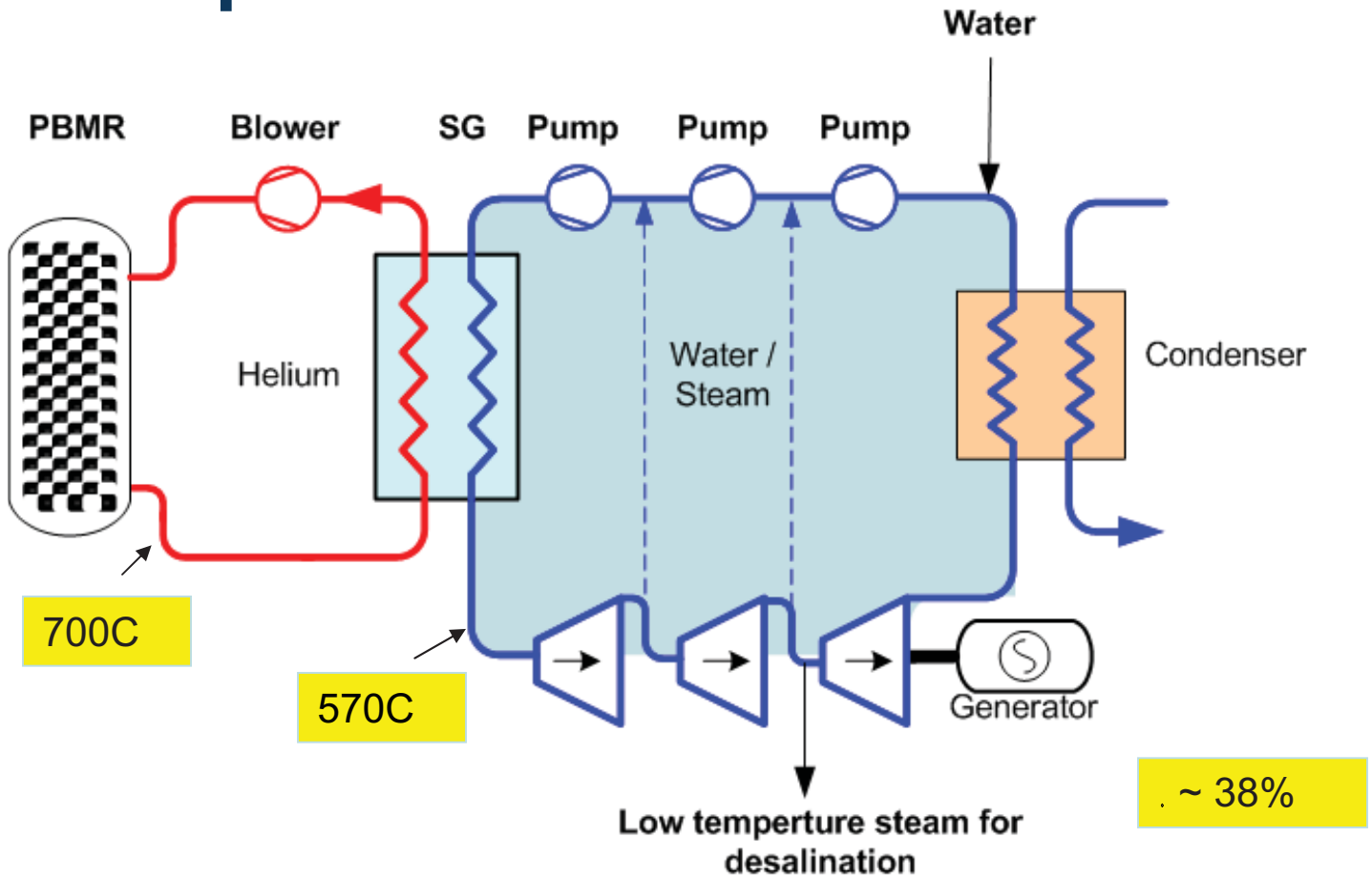

Commissioning of Demonstration plant scheduled for 2018.

HT Process Steam Option

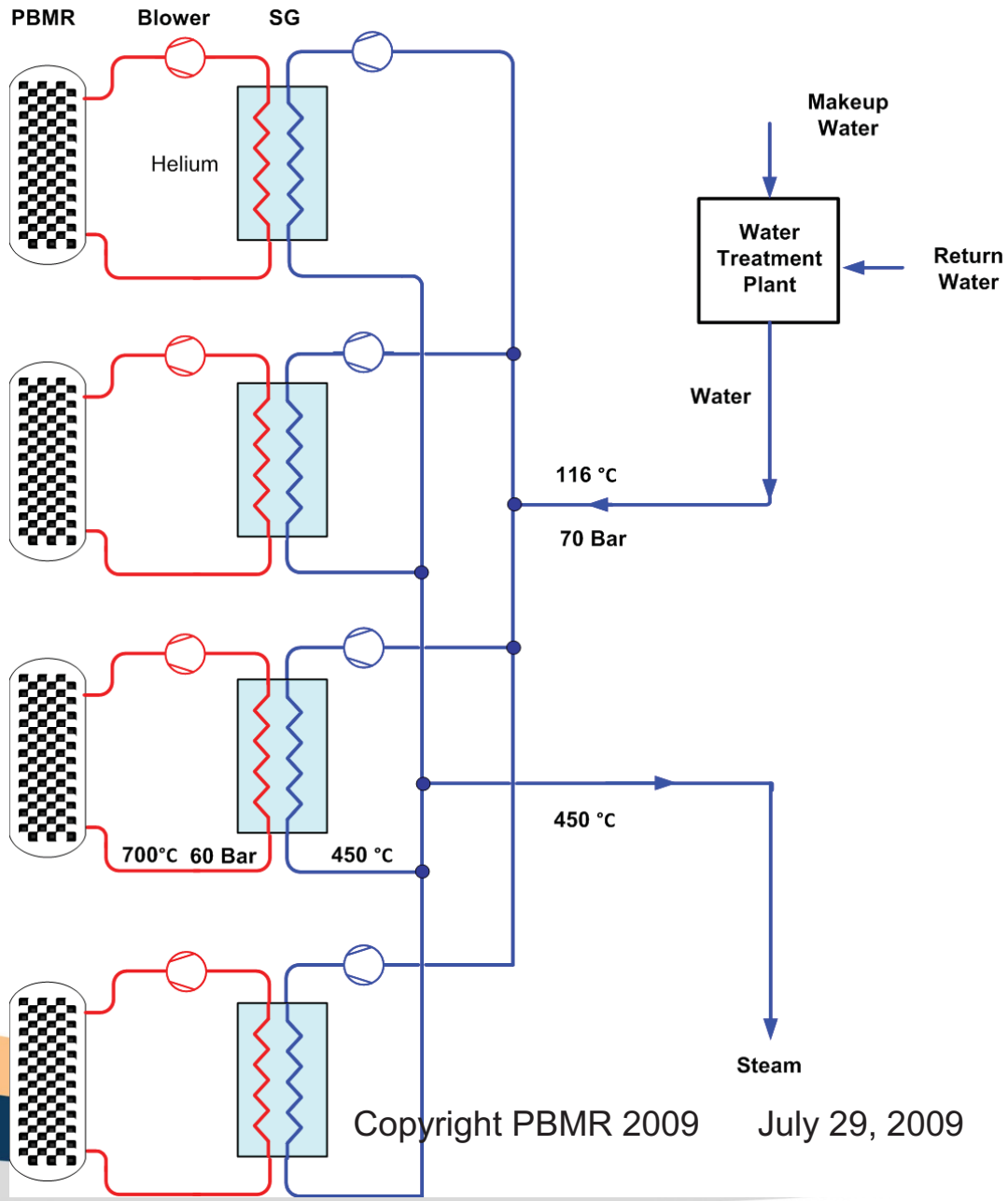

Copyright PBMR 2009

P B M R

HT Process Steam Cogen Option

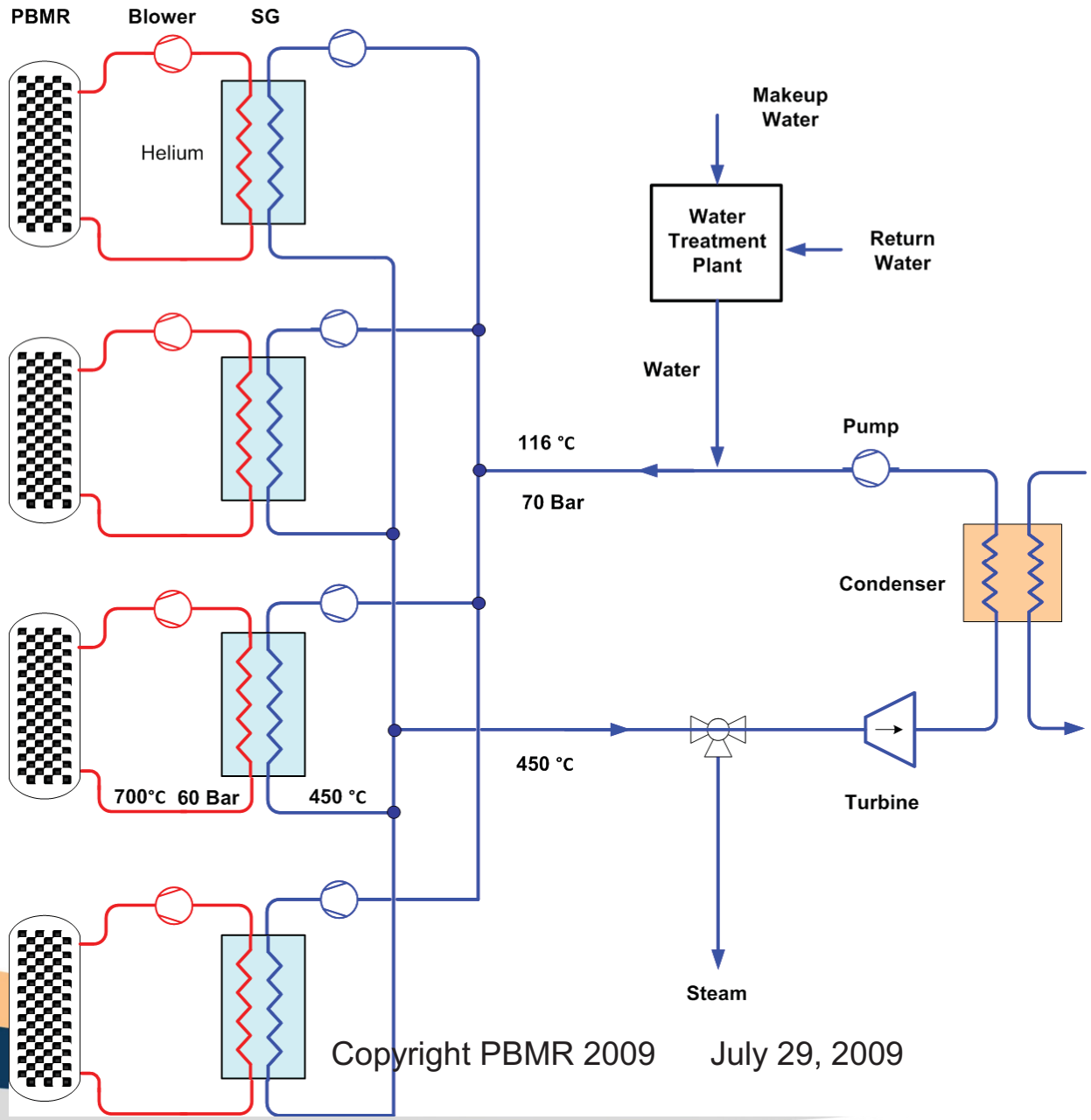

Copyright PBMR 2009 July 29, 2009

P B M R

Oils Sands Option (1)

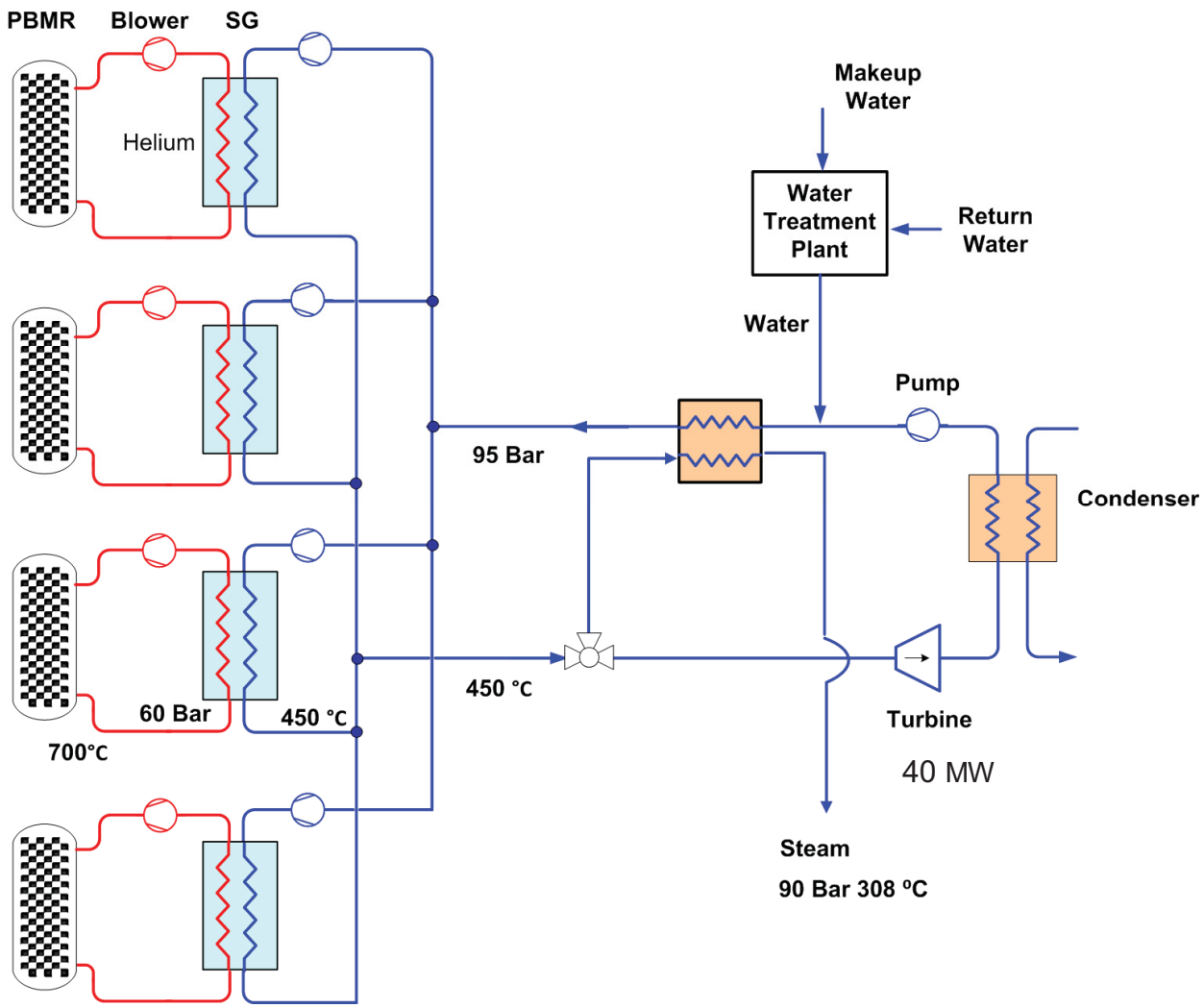

4 x 250 MWt (~100 kbbl/day bitumen production, with less electricity)

Copyright PBMR 2009 July 29, 2009

P B M R

Reference Cogen Option

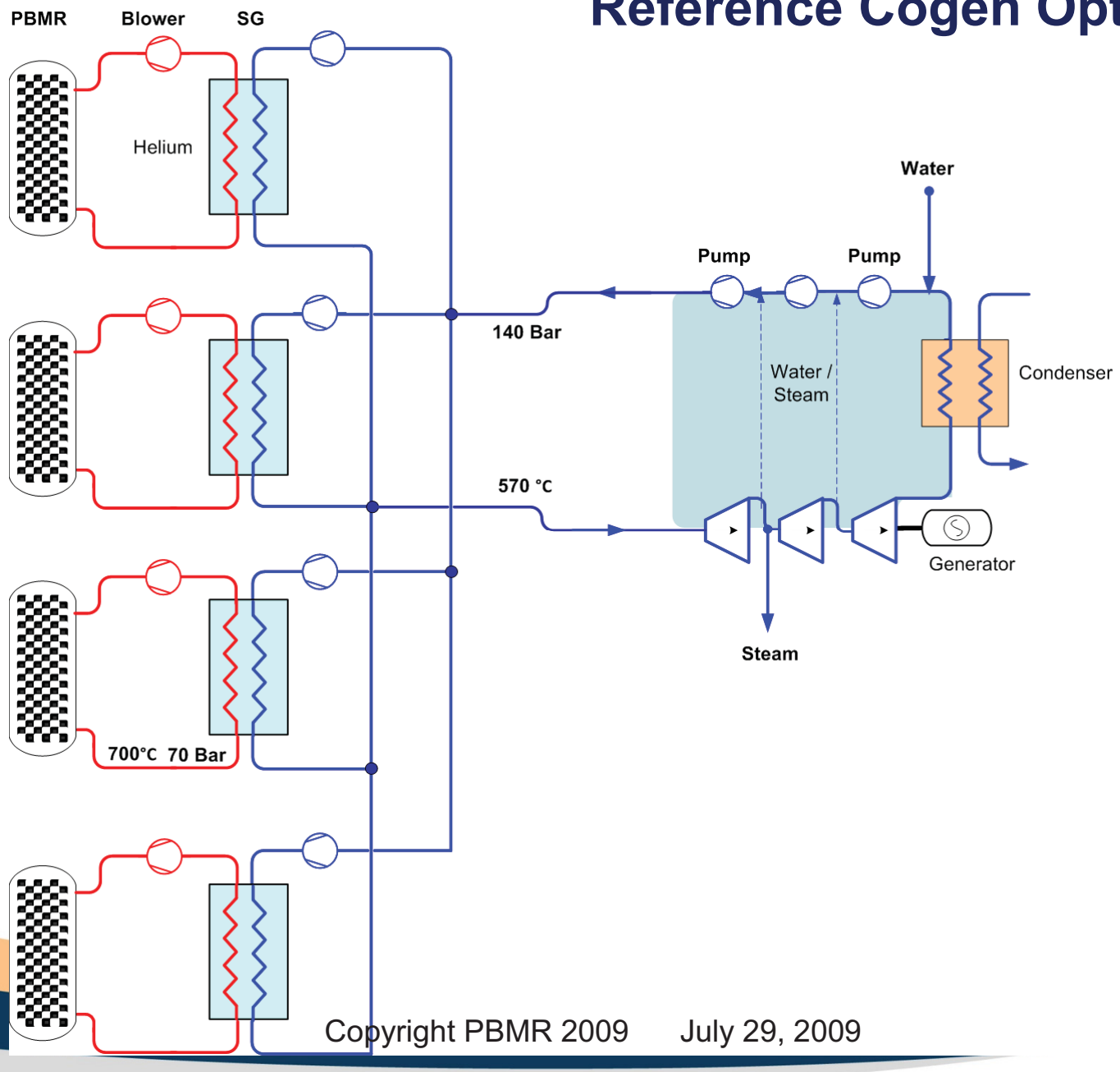

Copyright PBMR 2009 July 29, 2009

P B M R

Cogen Option

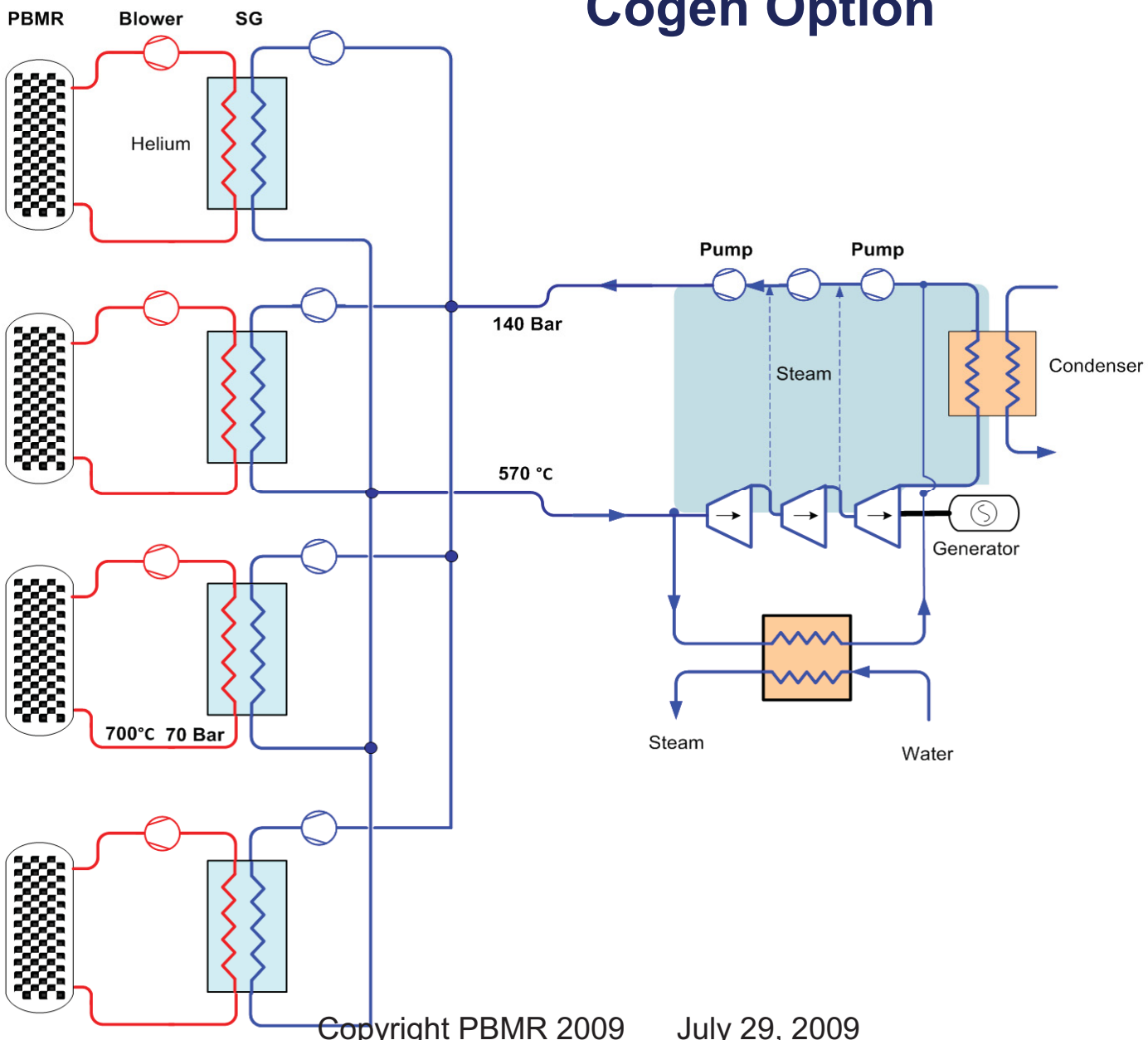

Copyright PBMR 2009 July 29, 2009

P B M R

Standardised Nuclear Heat Supply System

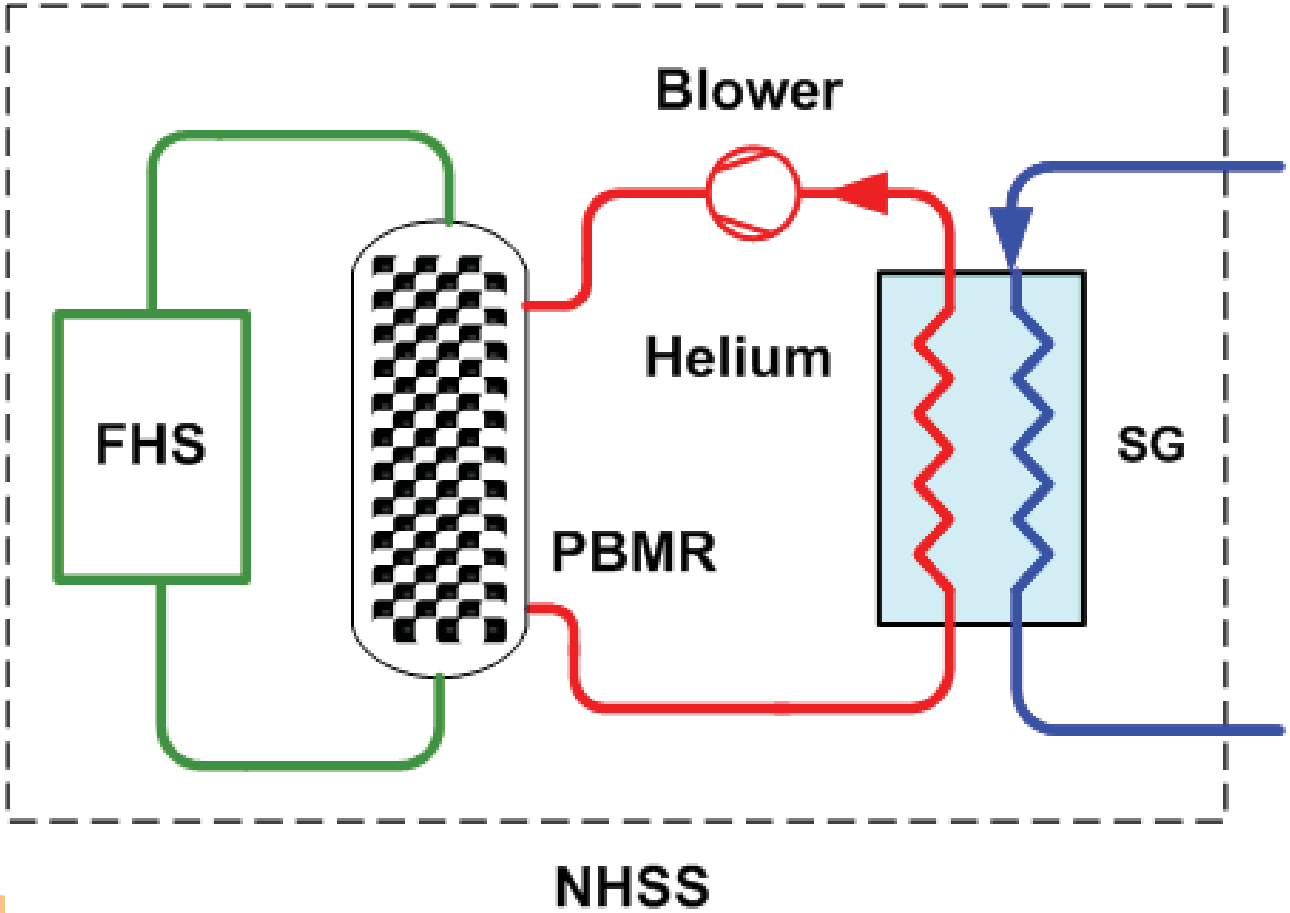

Copyright PBMR 2009 July 29, 2009

P B M R

High-Temperature Process Heat Cogeneration Plant

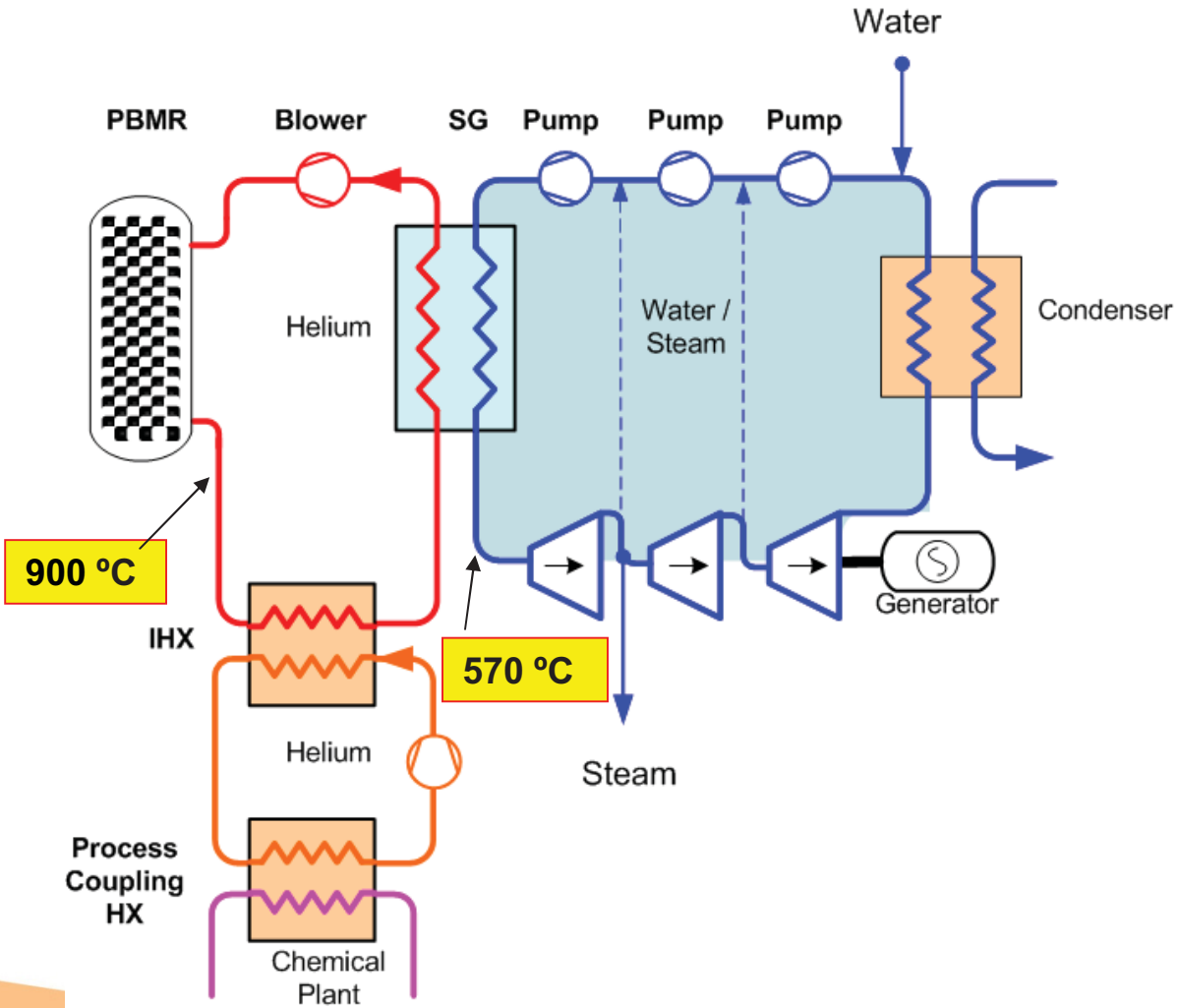

Copyright PBMR 2009 July 29, 2009

P B M R

Conclusion

- Flexibility to tailor the steam / electricity balance according to the specific requirements.
- Steam quality to take advantage of higher efficiencies in electrical production as well as respond to differing client steam needs.
- Using catalogue electrical power generation systems, PBMR can offer:
  - Steam only
  - Electricity only
  - Steam & electricity cogeneration using either extraction steam or exhaust turbine.
- Flexibility to respond to feedwater treatment constraints.
- Modularity allows the plant to be incrementally expanded to match growth expansions without excessive capital investment upfront.
- Growth potential to direct heating and higher temperature applications – via evolutionary development and non-nuclear testing

Copyright PBMR 2009

Path Forward

- PBMR major stakeholder, South African Government, formalizes budget support for next phase of Conceptual Design and Sasol based Project development.
- US NGNP Project adopts new design as bases for proposal to DOE and ongoing work and cooperation development.
- PTAC, with support from Oil Sands (OS) Producers, Albertan and Federal Governments, conducts incremental work associated with OS applications feasibility study.
- PBMR and INET cooperation supplements all the above

Copyright PBMR 2009

AREVA

AREVA Design Basis Perspective

Senior Advisory Group
Finis Southworth
AREVA NP Inc.

Washington DC
July 30, 2009

AREVA

Presentation Topics

- HTTF Design Basis Considerations
- Current AREVA HTR Concept
- HTR Design Basis Events and Test Matrix
- Consideration of Future HTR Concepts
- Wrap up

AREVA

Test Facility Configuration Depends On…

- Configuration and design of actual reactor(s)
  - Geometry
  - Operating and accident conditions
- Test scope
  - Single scenario or event?
  - Family of events?
  - All design events?
- Information to be acquired
  - Integral effects?
  - Separate effects?
  - PIRT significance (knowledge/importance)
- Scaling considerations

AREVA

AREVA Has Studied Several HTR Concepts

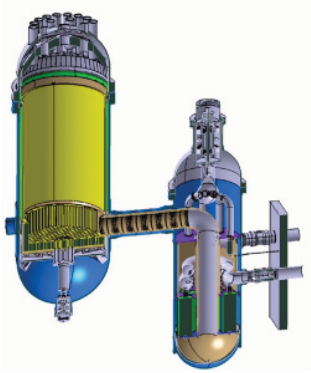

- **ANTARES**
  - **Indirect CCGT**

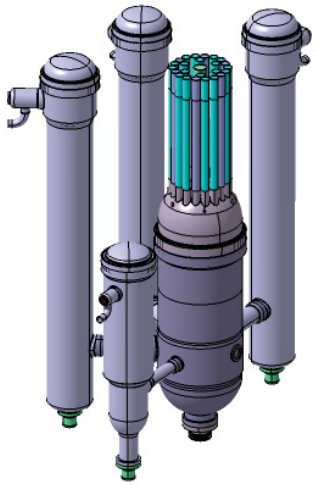

- **NGNP Preconceptual Design**
  - **Indirect CCGT**

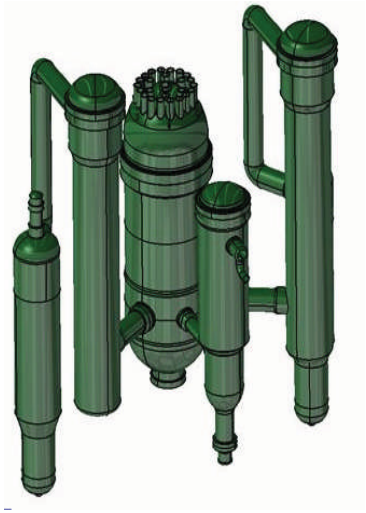

- **NGNP conceptual studies**
  - **Indirect steam cycle**

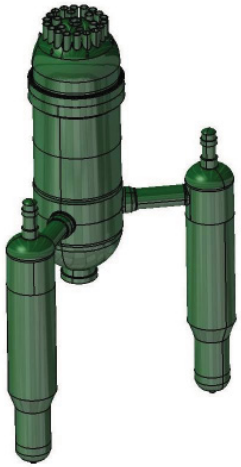

- **Current concept**
  - **Conventional steam cycle**

AREVA's Advanced Steam Cycle HTR Concept

- Annular graphite core
  - TRISO coated particle fuel (SiC; UO_2 or UCO)
  - Prismatic block fuel elements
  - 102 columns, 10 blocks each
- Steam cycle
  - Helical coil steam generator
  - Steam generator in primary circuit
- Passive decay heat removal
- SA-508/533 reactor vessel
- Wide flexibility for cogeneration applications
- Reduced technical and schedule risk

AREVA

Conventional Steam Cycle
Primary and Secondary Configuration

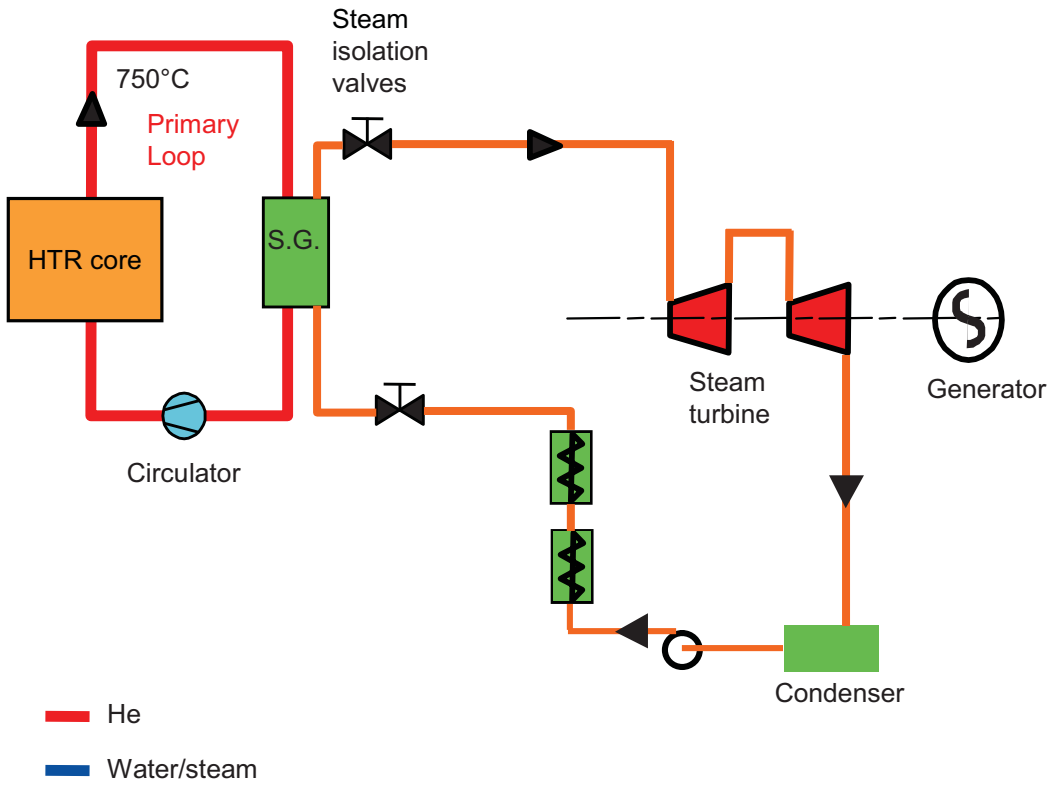

AREVA

AREVA Steam Cycle HTR Parameters

Parameter	Value
Reactor Power Level	625 MWt
Reactor Outlet Temperature	750°C
Reactor Inlet Temperature	325°C
Primary Coolant Flow Rate	282 kg/s
Primary Coolant Pressure	6.0 MPa
Primary Coolant	He
Operating Max. Fuel Temp. Guideline	1300°C
Accident Peak Fuel Temp. Guideline	1600°C
Main Steam Outlet Temperature	566°C
Main Steam Pressure (Outlet)	16.7 MPa
Feedwater Flow Rate	140.7 kg/s
Net Generating Efficiency (electric mode)	42-46%

AREVA

HTR Reactor Internals

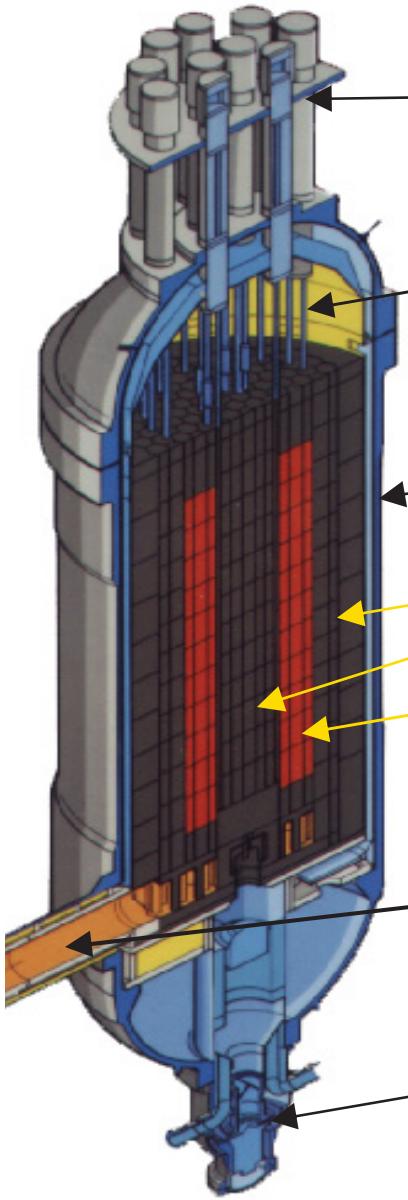

AREVA

Ceramic Fuel Particles In Graphite Prismatic Block Fuel Elements

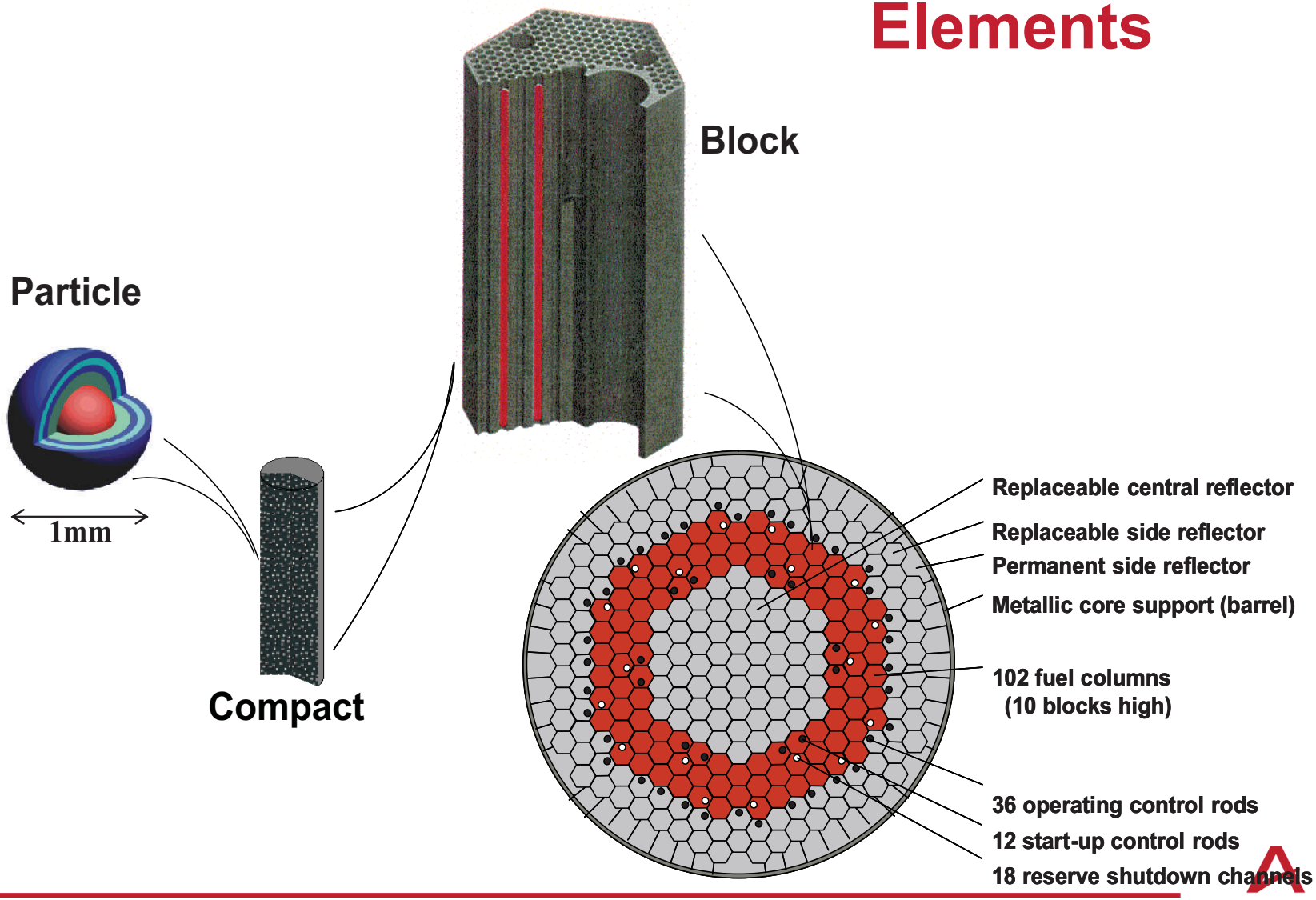

AREVA

Arrangement for Conventional Steam Nuclear Heat Source

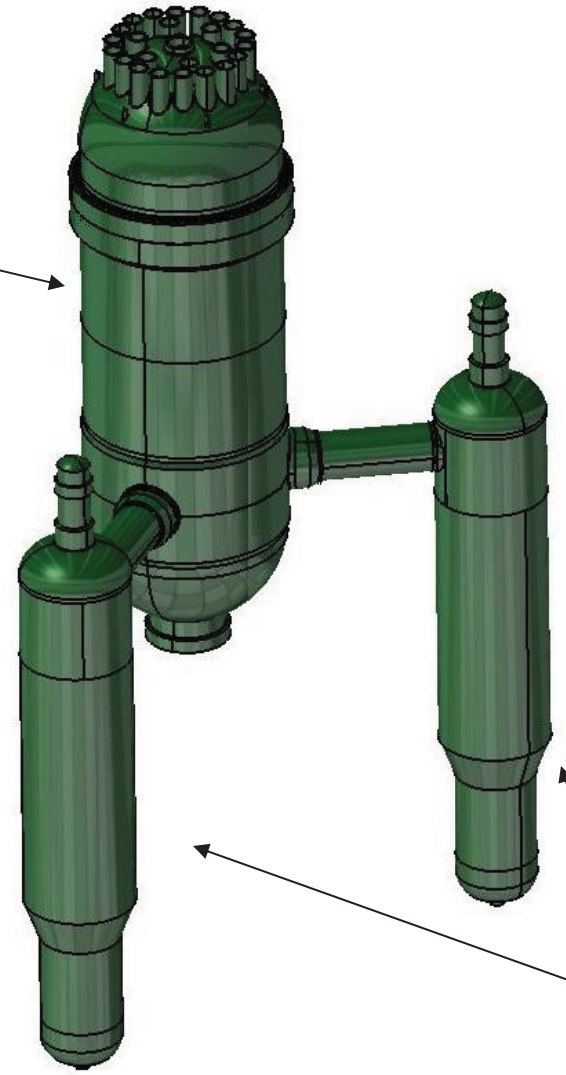

Current parameters:

Reactor 625 MWt

SGs – 2 x 315 MWt

Circulators – 2 x 4.0 MWe

AREVA

AREVA Reactor Cavity Cooling System Configuration

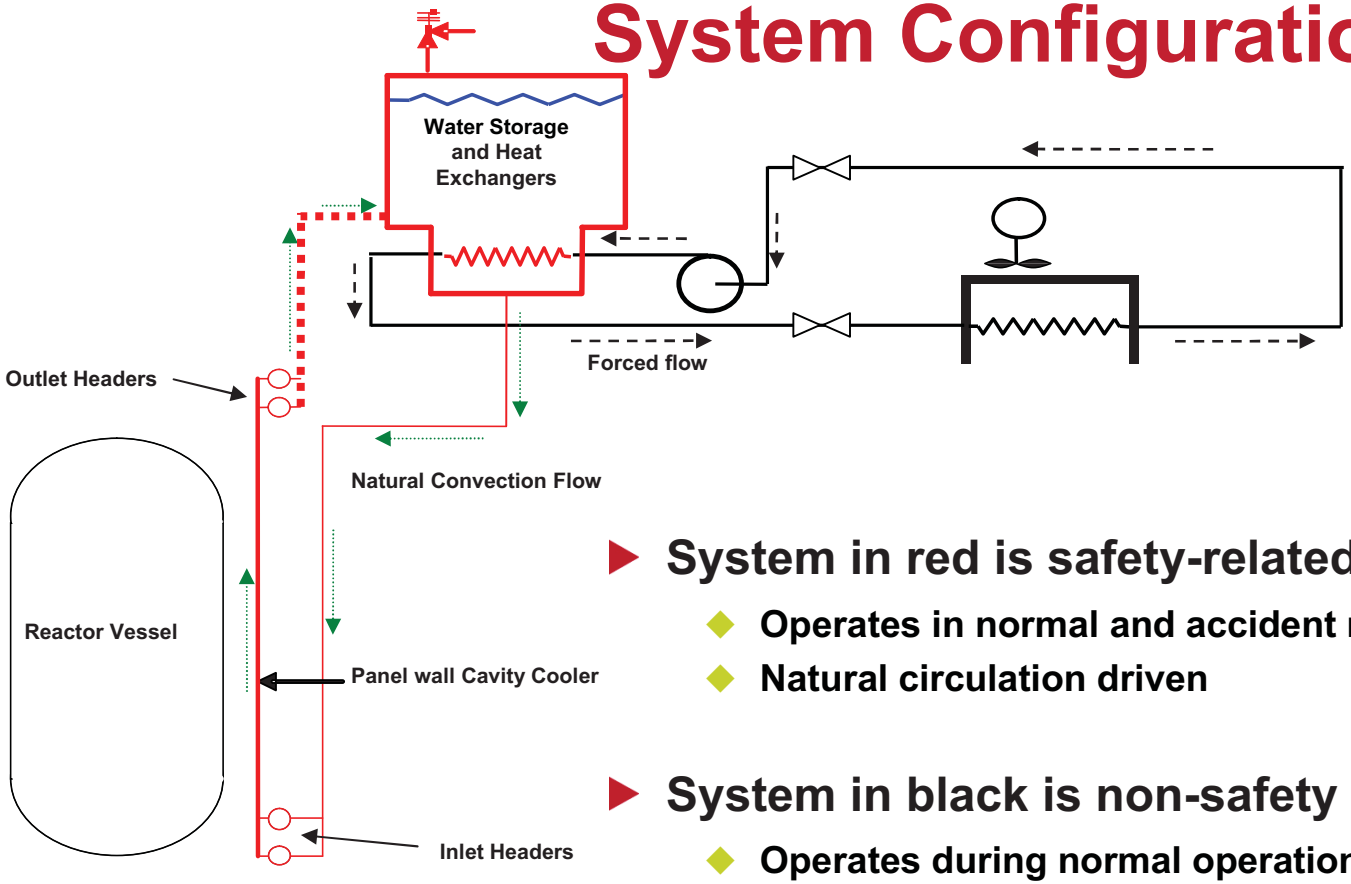

- System in red is safety-related
  - Operates in normal and accident modes
  - Natural circulation driven
- System in black is non-safety
  - Operates during normal operation
  - Forced circulation

(one of two redundant loops shown)

AREVA

Commercial Process Heat Cogeneration Facility Basic Configuration

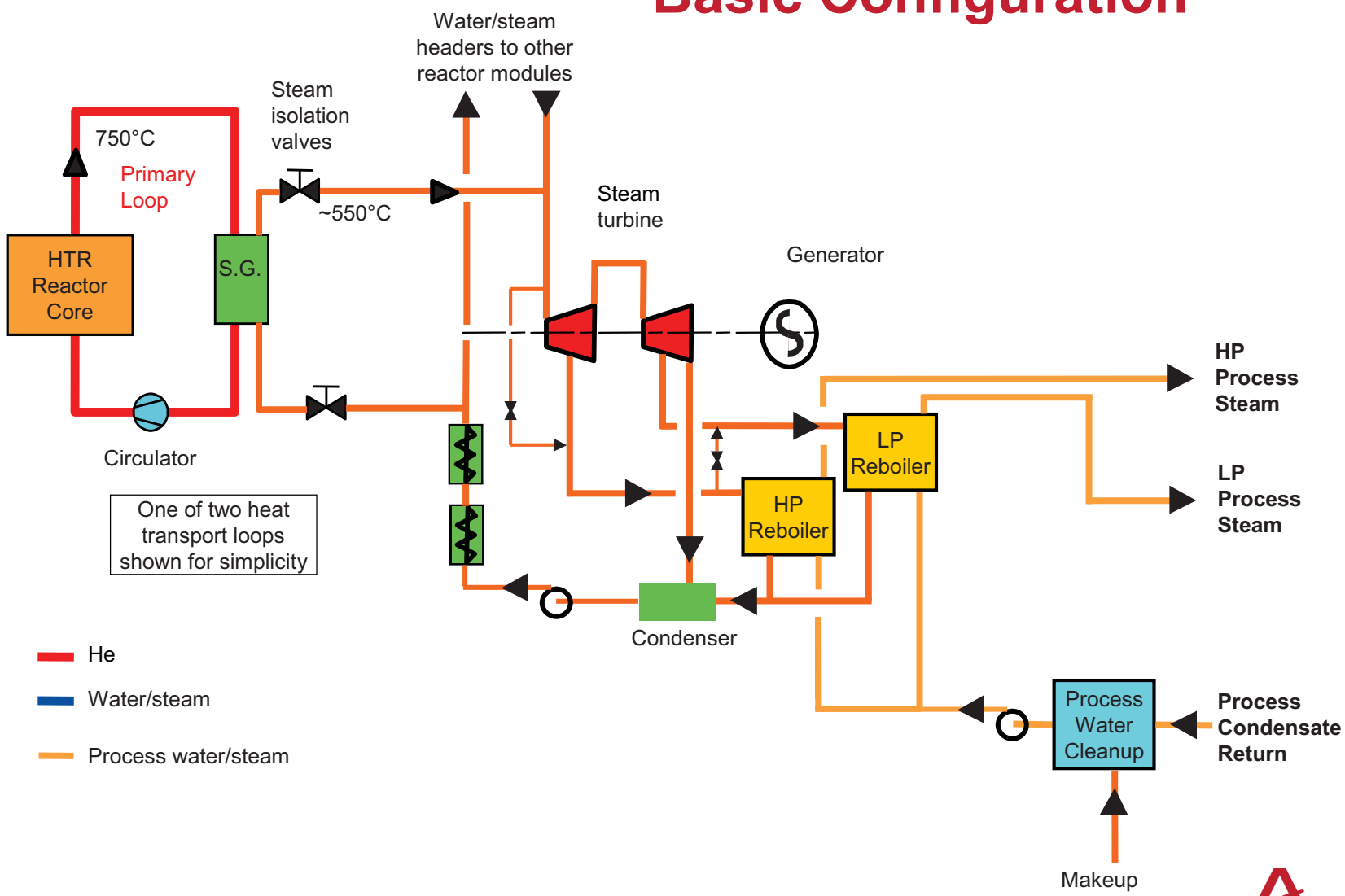

AREVA

Plant Design Basis Includes Broad Range of Events

- **Normal Operating Events**
  - **Startup/Shutdown**
  - **Load changes (slow, rapid, step)**
  - **Load transfer (switch from process to electric, etc.)**
  - **Etc.**
- **Upset/Off-normal Events**
  - **Trips (reactor trip, loop trip, turbine trip, …)**
  - **Load rejections**
  - **Small primary leaks**
  - **Minor ingress events (air, water)**
  - **Etc.**
- **DBEs/DBAs**
  - **Reactivity events**
  - **Large leaks**
  - **Conduction cooldown (pressurized, depressurized)**
  - **Etc.**

AREVA

Which Events Require Integral Testing (Prior to Plant Operation)

- Design and licensing must consider all events
- Integral testing important when questions about
  - Fidelity between theoretical and physical system
  - Adequate identification of phenomena
  - Integration of phenomena and resulting interactions
- May also provide greater overall level of comfort
- Fidelity problem also exists for testing
  - Are all relevant details of actual system included in test system?

AREVA

Which Events Within HTTF Scope?

- All events?
- Conduction cooldown?
- Depressurization?
- Ingress events?
- Other?

HTTF test scope will determine facility requirements

AREVA

AREVA Thoughts on HTTF Test Matrix

- DCC may benefit from integral testing
  - Largest unknowns are in material properties, not phenomena integration
  - DCC is key event
  - Actual reactor data will be difficult to obtain
- PCC would benefit from integral testing
  - More complex phenomenologically
  - Fidelity issues are difficult, both for theoretical model and for test facility
- Other event families?
  - May be significant benefits
  - Much more complicated for test facility
- Testing must focus on Design Basis region

AREVA

Steam Cycle Supports Early Market Penetration AND Future Enhancements

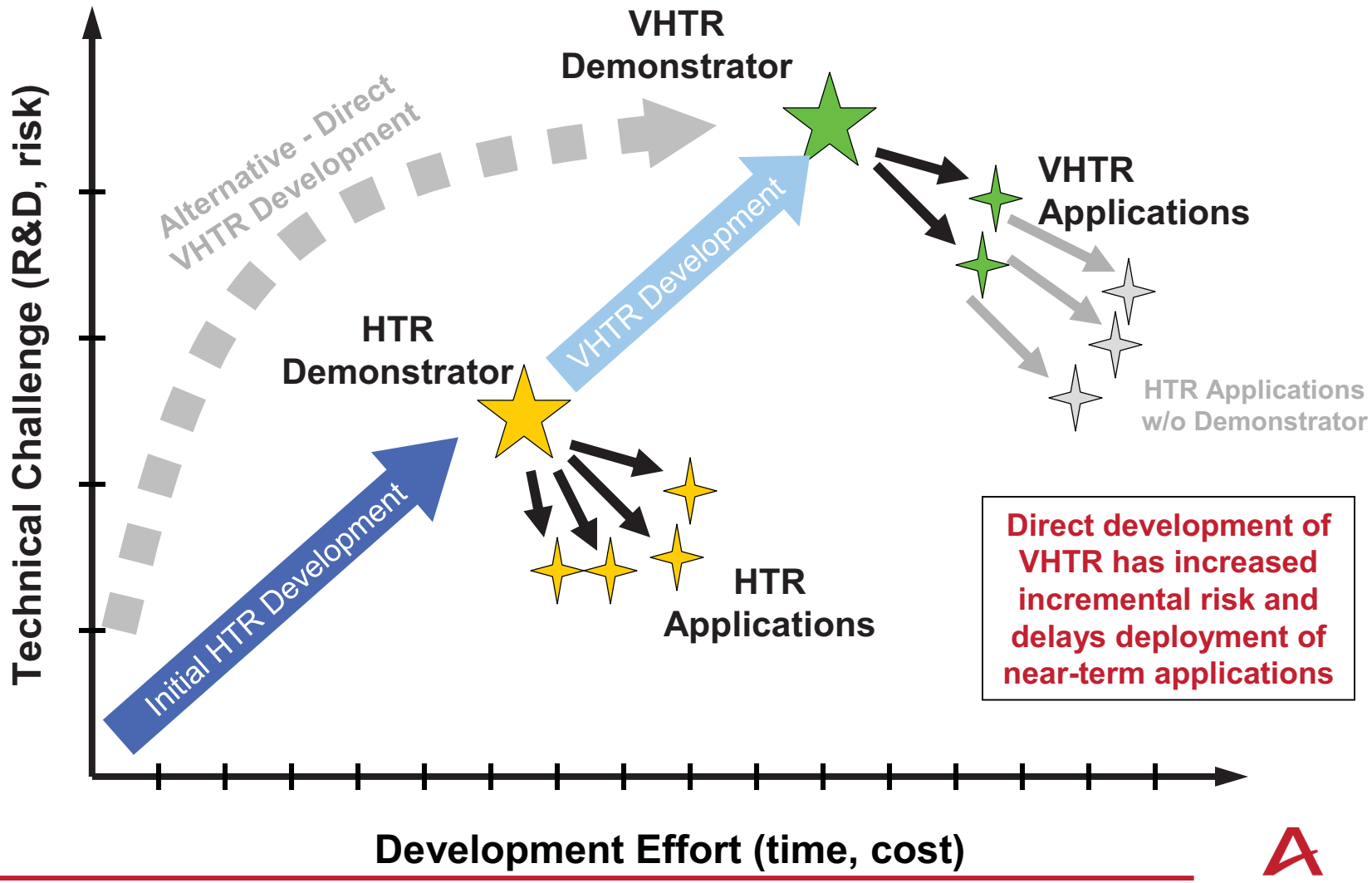

Direct development of VHTR has increased incremental risk and delays deployment of near-term applications

AREVA

Conventional Steam Cycle Is Logical First Step in Developing Full HTR Potential

Required Development	Steam Cycle	Future VHTR
Fuel Qualification	X	
HTR Siting	X	
HTR Licensing	X	
Process Interface Issues	X	
Safety Case Validation	X	
Very High Temperature Materials (metals, ceramics)		X
High Temperature Fuel		X
IHX Development		X
Very High Temperature Process Interface		X

AREVA

Consideration of Future HTR Concepts

- Higher temperatures
  - Operating temperatures
  - Accident temperatures
- Core design
- Alternate primary configurations
  - Steam generator
  - IHX and secondary heat transport loop (gas or salt)
  - Direct Brayton cycle
- Test matrix differences
  - Event sequences
  - Phenomenology

Not simply a matter of using higher temperature materials

AREVA

Potential HTTF Flexibility for Future HTR Concepts

- Fuel limits peak accident core temperature (relatively independent of concept)
  - TRISO
  - TRIZO
- Test matrix scope affects flexibility
  - DLOFC/DCC insensitive to primary loop differences
  - PLOFC/PCC somewhat affected by primary circuit
  - Forced convection events strongly affected by primary loop configuration
- Replaceable or reconfigurable components may be appropriate to support future concepts

AREVA

Conclusions

- AREVA has evaluated several possible HTR configurations
- AREVA pursuing conventional steam cycle
  - Prismatic annular core
  - 750°C core outlet temperature
  - Steam generator in primary loop
- Design and Licensing must consider all events
- Integral testing important when questions about
  - Identification of phenomena
  - Integration of phenomena
- Fidelity an issue for both testing and analysis
- DCC simplest for integral testing, but testing does not eliminate largest variability (properties)
- Other events could benefit more, but facility more complicated
- Capability to test future concepts does not just mean higher temperature materials

AREVA

Issues from July 30, 2009 SAG Meeting Agreements

- **Market Applications (Do we understand the end-user energy market sufficiently to not include capability for delivering hot gas in the first-round designs?)**

- **Economics (Conclusions on the economics of the "smaller" HTGR concept)**

- **Operational Acceptability (Owner/operator perspective on perhaps twice as many modular units to achieve same energy needs)**

- **Tritium Transport (confidence in understanding)**

- **US Government interest in technology partnership – scope (Does there continue to be a compelling case for the US Government to assume or share the risk for commercialization of HTGR technology given the lower risk profile associated with the configurations described in this SAG meeting?)**

- **Schedule and cost from end user point of view (Confidence in delivering the HTGR when promised)**

- **Programmatic recommendations for R&D (IHX, hydrogen, tritium transport)**

- **First demonstration (steam only v. cogeneration v. hot gas)**

NGNP Industry Alliance Schedule

July 28 – 29, 2009

Tuesday, July 28

2:00 p.m.	Pre-meeting at GA's Washington office 1899 Pennsylvania Ave. N.W. 202 496-8200 (nearest Metro station: Farragut West: 18th St. Exit)
4:00 p.m.	**James Windle**, Democratic Professional staff **Kevin Jones**, Republican Professional staff House Energy and Water Development Appropriations 2362 Rayburn Building

Wednesday, July 29

10:00 a.m.	**Jonathan Epstein**, Democratic Professional Staff Member **Isaac Elliot**, Republican Professional Staff Member Senate Committee on Energy and Natural Resources SD-304 Dirksen Building
11:30 a.m.	**Shane Johnson** Office of Nuclear Energy
2:00 p.m.	**Congressman Simpson** and Idaho Delegation staff **Megan Milam** (Simpson) **Luke Tomanelli** (Crapo) **Devin Nagy (**Minnick) **Jason Bohrer** (Risch) 2312 Rayburn Building
3:00 p.m.	**Michelle Dallifior**, Democratic Professional Staff Member **Chris King**, Democratic Professional Staff Member **Adam Rosenberg**, Democratic Professional Staff Member **Elizabeth Chapel**, Republican Professional Staff Member House Committee on Science 2325 Rayburn Building

Action Items from Discussions with Congressional Staff During Week of July 27, 2009

1. Summary of technical metrics of most current functional and performance requirements and configuration compared to EPAct 2005 (Mears – first draft)

2. Dow's (Fred Moore's) energy and feedstock needs summary for typical petrochemical applications (Phil will talk to Fred – use presentation to Westinghouse?)

3. Suggestions to tighten Congressional appropriation language to ensure NGNP directed funding is applied to Project and not diverted for other priorities (Haynes – first draft)

4. White paper on cost share perspectives based on previous investments, particularly nuclear system suppliers (Regis will prepare first draft)

5. Breakdown of budget estimates for FY10 and FY11 (Phil)

6. Environmental and energy security basis for deploying HTGR technology (Haynes and Mears providing review)

7. Direction to/strategy for NRC to make real progress in pre-application and subsequent license application (Phil)

8. Additional near-term follow-on discussions Administration and Congress (Haynes)

Administration
Carol Browner (or her staff prior to proposal) (Personally when proposal together)
OMB – PAD and Kevin Carroll
Pete Miller
Kristina Johnson
John Holdren

Congressional staff
O'Malia
Clapp
Bennett's
Landrieu's
Alexander's
McCain's

Members
Joint meeting of Senators that support nuclear energy ("Bohrer List" - McCain, Bennett, Alexander, Landrieu, Carper, Dorgan, Crapo, Risch, Bingaman, Voinovich)