AGR-5/6/7 Test Train Design

Advanced Gas Reactor Fuels Program Review

Joe Palmer

July 2015

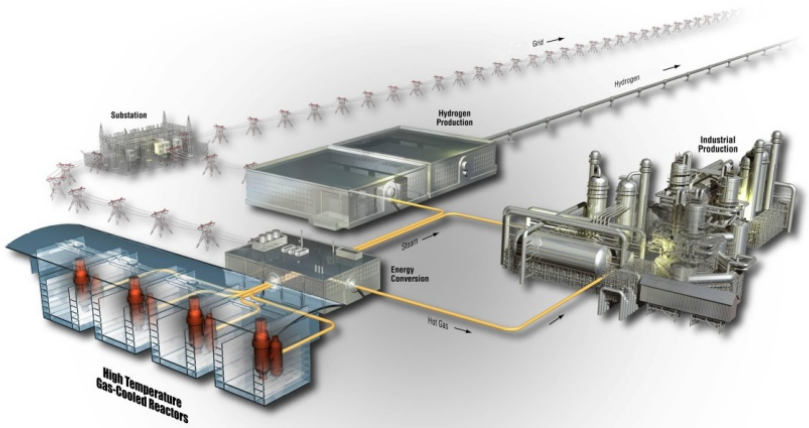

www.inl.gov

Idaho National Laboratory

AGR Experiment Overview

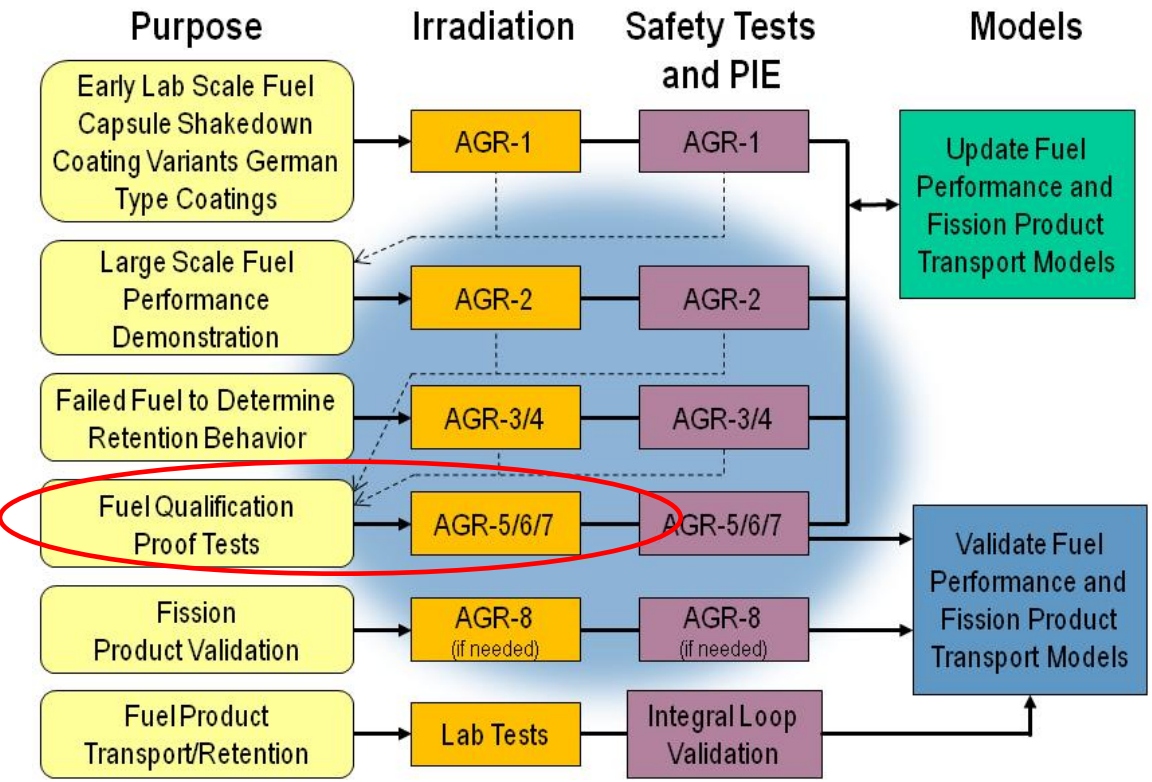

- AGR-5/6/7 mission and details
  - Fuel qualification (AGR-5/6) and margin test (AGR-7)
  - Originally envisioned as three separate tests
  - Covers wide range of temperatures and fuel burnup

AGR-5/6/7 Lifecycle

- Single test train spans more than 10 years of effort
- Conceptual design began October 2013
- PIE will complete at the end of FY-2024

Task Name	Duration	Start	Finish
AGR-5/6/7 Lifecycle	**2870 days**	**10/1/13**	**9/30/24**
Conceptual Design	261 days	10/1/13	9/30/14
Final Design	261 days	10/1/14	9/30/15
Fabricate	175 days	10/1/15	6/1/16
Assemble	210 days	6/2/16	3/22/17
Irradiate	777 days	3/23/17	3/13/20
Cooldown	90 days	3/16/20	7/17/20
Size for Shipping	4 days	7/20/20	7/23/20
PIE	1092 days	7/24/20	9/30/24

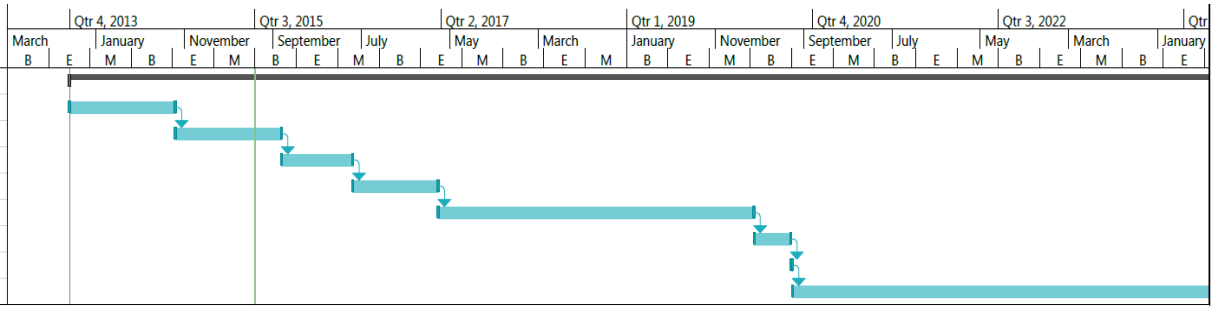

Presentation Outline

- Design Requirements
- Design Philosophy
- Neutron Filtering
- Temperature Measurement
- Review of Drawings
- Supplementary Instrumentation

Northeast Flux Trap

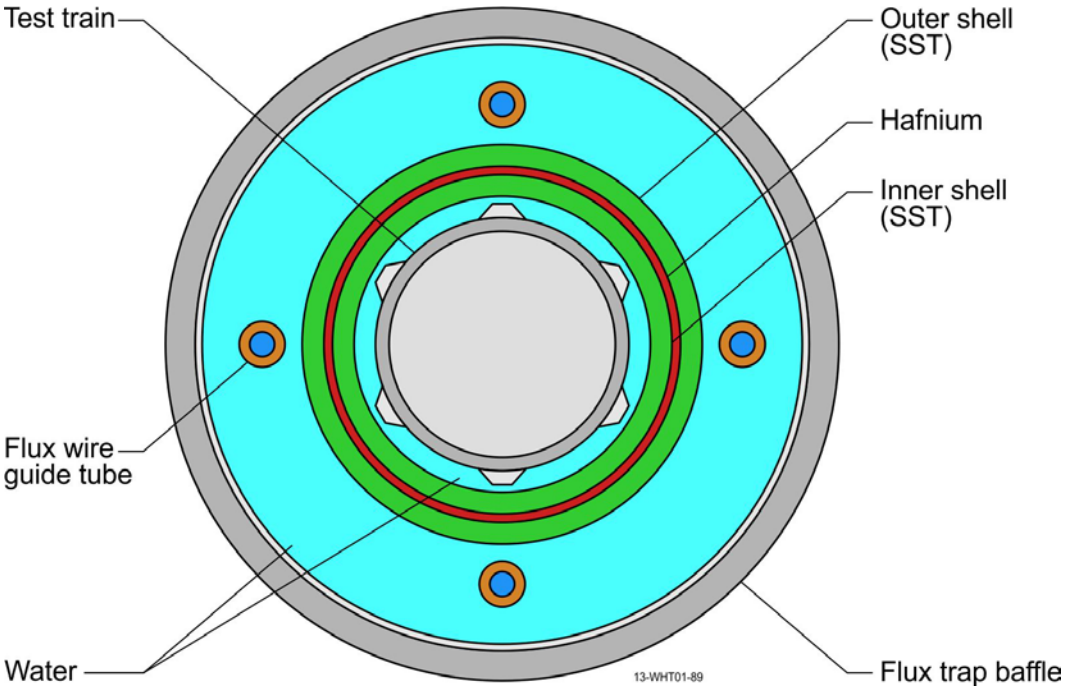

Cross Section of AGR-5/6/7 Test Train in Irradiation Housing (Very Similar to AGR-3/4)

AGR-5/6/7 Irradiation Specifications

Parameter	AGR-5/6 Specification	AGR-7 Specification
Minimum compact average burnup (% FIMA)	>6 for all compacts	>6 for all compacts
Maximum fuel compact average burnup (% FIMA)	>18 for at least one compact	>18 for at least one compact
Maximum fuel compact fast neutron fluence (n/m2, E > 0.18 MeV)	$\geq 5.0 \times 10^{25}$ for at least one compact and $\leq 7.5 \times 10^{25}$ for all compacts	$\geq 5.0 \times 10^{25}$ for at least one compact and $\leq 7.5 \times 10^{25}$ for all compacts
Minimum fuel compact fast neutron fluence (n/m2, E > 0.18 MeV)	$> 1.5 \times 10^{25}$	$> 1.5 \times 10^{25}$

Temperature Distribution Objectives

Parameter	AGR-5/6 Specification	AGR-7 Specification
Instantaneous peak temperature for each capsule (°C)	≤1800	≤1800
Time average temperature distribution goals (°C)	≥600 and <900 for about 30% of the fuel	Not specified But we are trying for ≥1350 and <1550 for as much of the fuel as possible
	≥900 and <1050 for about 30% of the fuel	
	≥1050 and <1250 for about 30% of the fuel	
	≥1250 and <1400 for about 10% of the fuel	
Time average, peak temperature goal (°C)	1350 ± 50	1500 ± 50
Time average, minimum temperature goal (°C)	≤700	Not specified

Design Philosophy (Guiding Principles)

- Avoid use of refractory metals for thru-tubes and gas lines – evidence from AGR-2 suggests they are more susceptible to cracking
- Use a few large thru-tubes rather than many small ones
  - Simplifies assembly and sealing at the slip fit
  - May allow for factory potting of thermocouples (TCs) which may reduce failures
- In the trade-off between a large number of smaller TCs vs fewer but bigger TCs, lean toward the large number
- Minimize temperatures in thru-tubes to increase TC lifetimes (try to keep <900°C)
- Reuse AGR-3/4 design concepts as much as possible

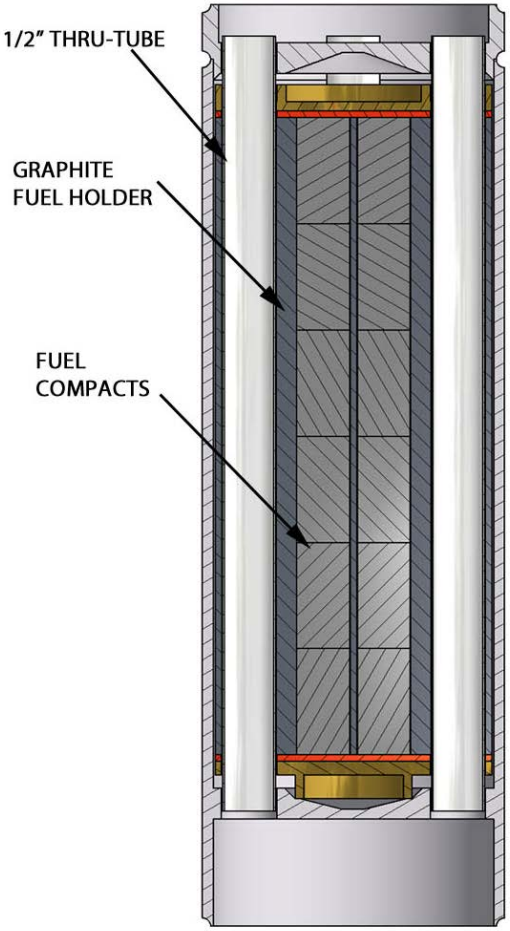

AGR-5/6/7 Representative Capsule

Neutron Filtering – Strategies

- Reduce the filtering on the end capsules to increase the burnup for these two capsules
- Fabricate a series of filters and reduce the filtering as the experiment proceeds. This allows us to complete the experiment earlier and achieve a better fast fluence to burnup ratio.

Neutron Filtering – Three Filters

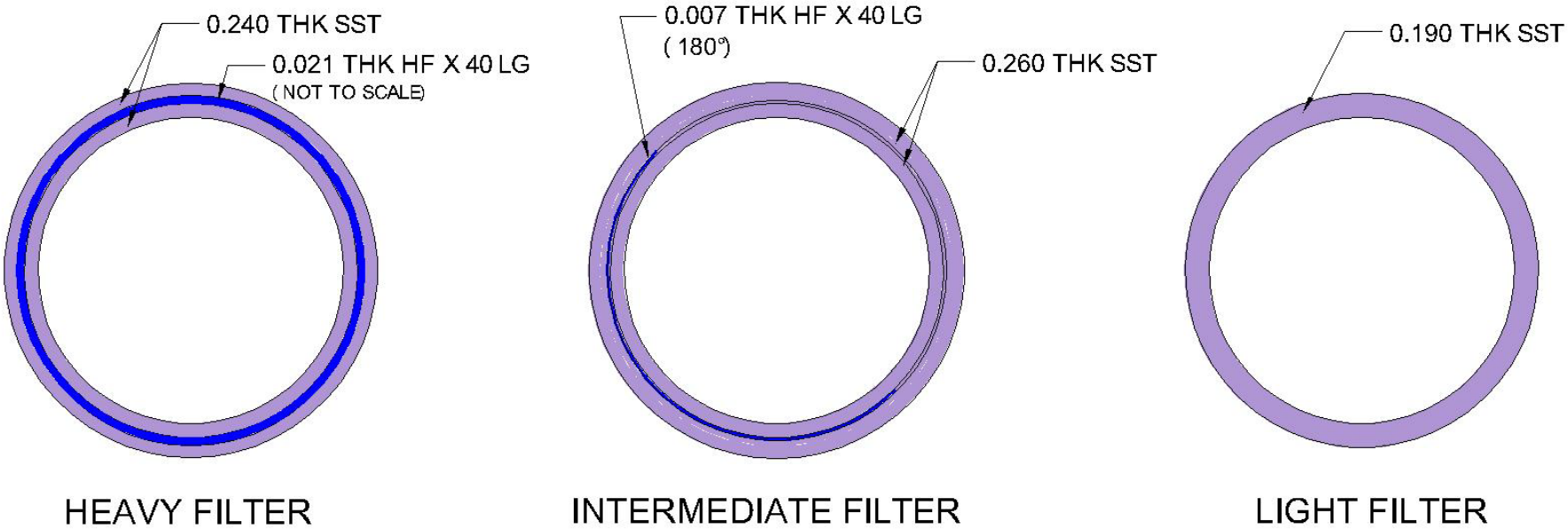

Note: We tried an aluminum filter instead of the SST “light” filter, but this doubled the heat rates on the end capsules.

Baseline Irradiation Schedule

	50 Day	50 Day	15 Day	50 Day	50 Day	15 Day	
Cycle	1	2	3	4	5	6	
Power	14MW	14MW	PALM	14MW	14MW	PALM	
Filter	Intermediate	Intermediate	Heavy	Intermediate	Intermediate	Intermediate	
	50 Day	50 Day	15 Day	50 Day	50 Day	15 Day	50 Day
Cycle	7	8	9	10	11	12	13
Power	14MW	16 MW	PALM	18MW	18 MW	PALM	18 MW
Filter	Light	Light	Light	Light	Light	Light	Light

Fuel Loading Strategy

- Because of the high heat rates in the middle section of the core, we found it necessary to reduce the particle loading
- The fuel particle packing fraction for the three center capsules (2, 3, and 4) is 25%
- The fuel particle packing fraction for the two outer capsules (1 and 5) is 40%

Test Train Design

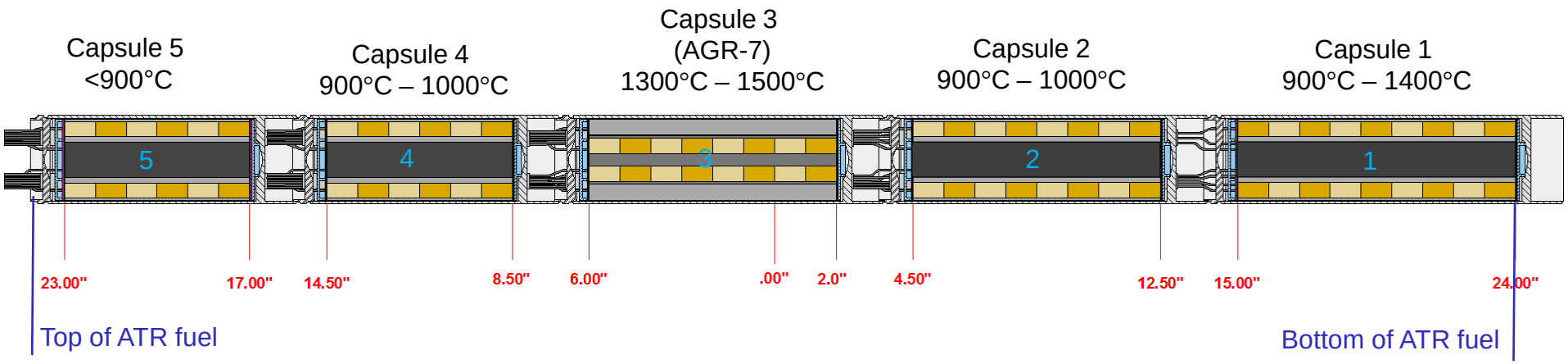

- The test train covers the center 47 inches of the core. Capsules 5 and 4 have 6 inch fuel stacks; capsules 3 and 2 have 8 inch fuel stacks; and capsule 1 (the bottom capsule) has 9 inch fuel stacks.
- The plenum regions between capsules have been extended compared to AGR-3/4 to accommodate bending of larger and stiffer thermocouples
- The design provides for 170 compacts (514,000 particles) in AGR-5/6 and 24 compacts (51,800 particles) in AGR-7. (There are about 3450 particles per compact in capsules 1 and 5, and 2150 particles per compact in the other capsules.)

Capsule Cross Sections

- Capsule 1 (bottom capsule) has 10 fuel stacks and no thru tubes
- Capsule 3 (AGR-7) has three fuel stacks and two graphite holder segments
- Capsules 2, 4, and 5 have four fuel stacks each and hollow centers to reduce heat rate

Capsules 2, 4, 5

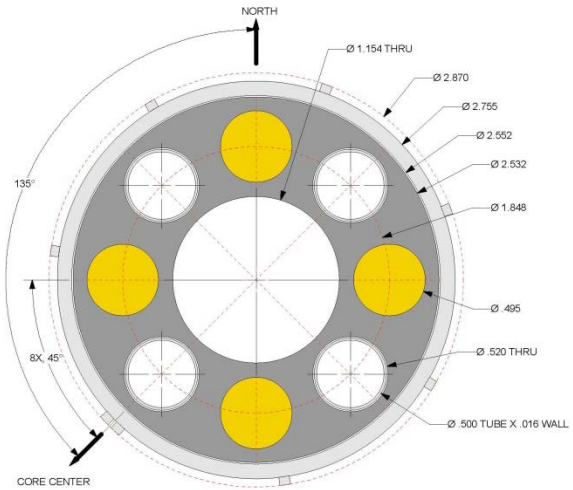

Capsule 3

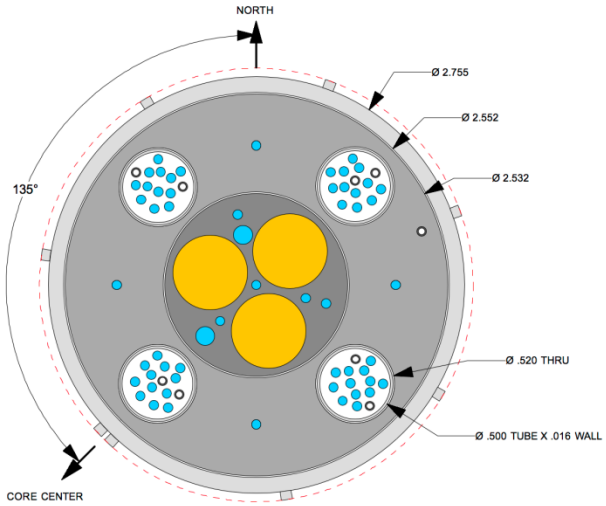

Capsule 1

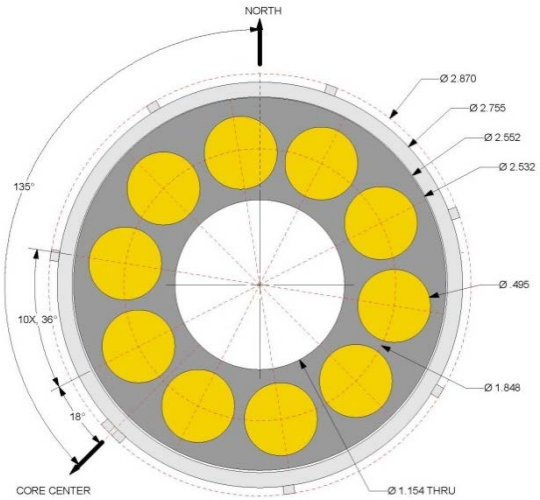

Gas Impurities

- The design requirements for the AGR-5/6/7 test specifies that the capability for injecting gas impurities must be available
- Capsules 4 and 5 have been designed to accommodate gas impurities (no refractory metals are present in these two capsules)
- Note that gas impurities were injected into Capsule 11 in AGR-3/4 and there was no appreciable affect
- Therefore we may elect not to inject impurities into any AGR-5/6/7 capsules

Capsule Target Temperatures and Gas Gaps

Capsule Summary					
	Length (in)	Number of Compacts	Number of Particles	Target Temperature Range	Hot gas gap top half / Hot gas gap bottom half
Capsule 5	6	24	82,800	< 900C	0.013 / 0.008
Capsule 4	6	24	51,750	900C - 1050C	0.010 / 0.008
Capsule 3	8	24	51,750	1350C - 1500C	0.008 / .006 / 0.008
Capsule 2	8	32	69,000	900C - 1050C	0.007 / 0.008
Capsule 1	9	90	310,500	900C - 1350C	0.006 / 0.008
Totals	37	194	565,800		

Temperature Control Tools

- Gas gaps are smaller than we planned. This will result in more variability in the thermal resistance of the gas gaps than is ideal
- We have three knobs we can turn to control temperature
  - He/Ne gas blend
  - Lobe power
  - Neutron filter
- There is more flexibility in the neutron filter than we have used in the past. We can use any of three filters. We can choose to sit out or stay in each high power PALM cycle.

IG-430 May Help Maintain a Constant Gas Gap

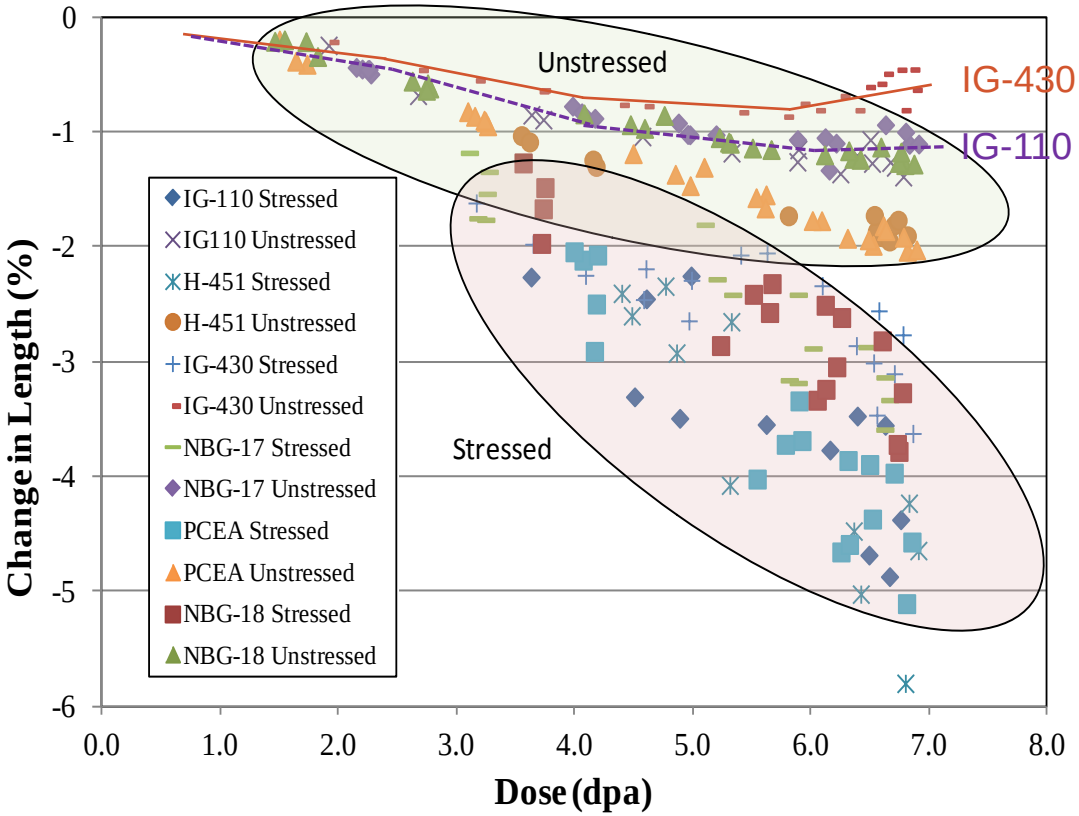

Graphite Shrinkage Measurements from AGC-1

We would like to use IG-430 because of its lower shrinkage

Less shrinkage might allow us to increase lobe power in the latter stages of irradiation and decrease irradiation time

Further Discussion on Capsule 1

- Capsule 1 is unique in that no thru-tubes are needed. For previous AGR experiments, thru-tubes were part of the bottom capsule. But for AGR-5/6/7 we propose no thru-tubes in the bottom capsule. <u>With no thru-tubes this capsule can be fully sealed</u>.
- Capsule 1 should be the hottest of the AGR-5/6 capsules. This is because we do not want instrumentation from lower capsules passing through the hot capsule.
- With no thru-tubes there is more room for fuel stacks.
- Another reason to make Capsule 1 the hottest of the AGR-5/6 capsules is that the problem of needing to use refractory thru-tubes in the hottest capsule is eliminated.

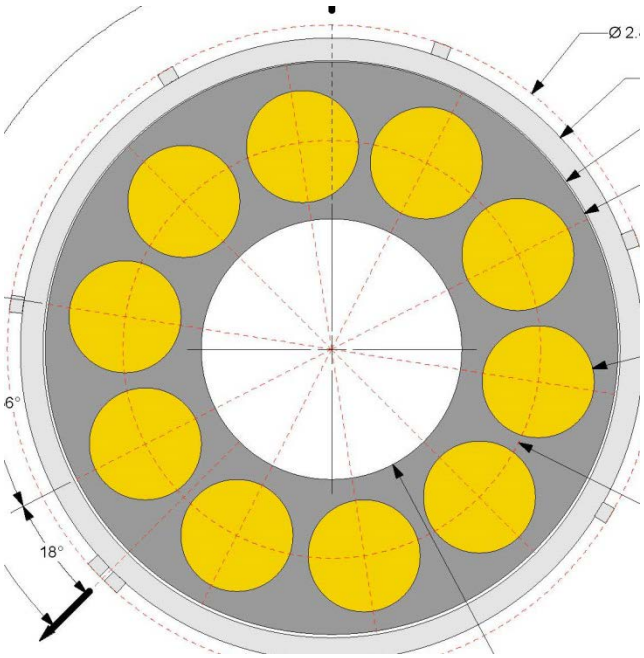

Further Discussion on Capsule 1

- Capsule 1 has 60% of the AGR-5/6 particles
- Capsule 1 has a substantial axial temperature gradient – we can only control temperature at one elevation (probably the peak temperature near the top of the capsule). The rest of the capsule temperatures will float to some degree

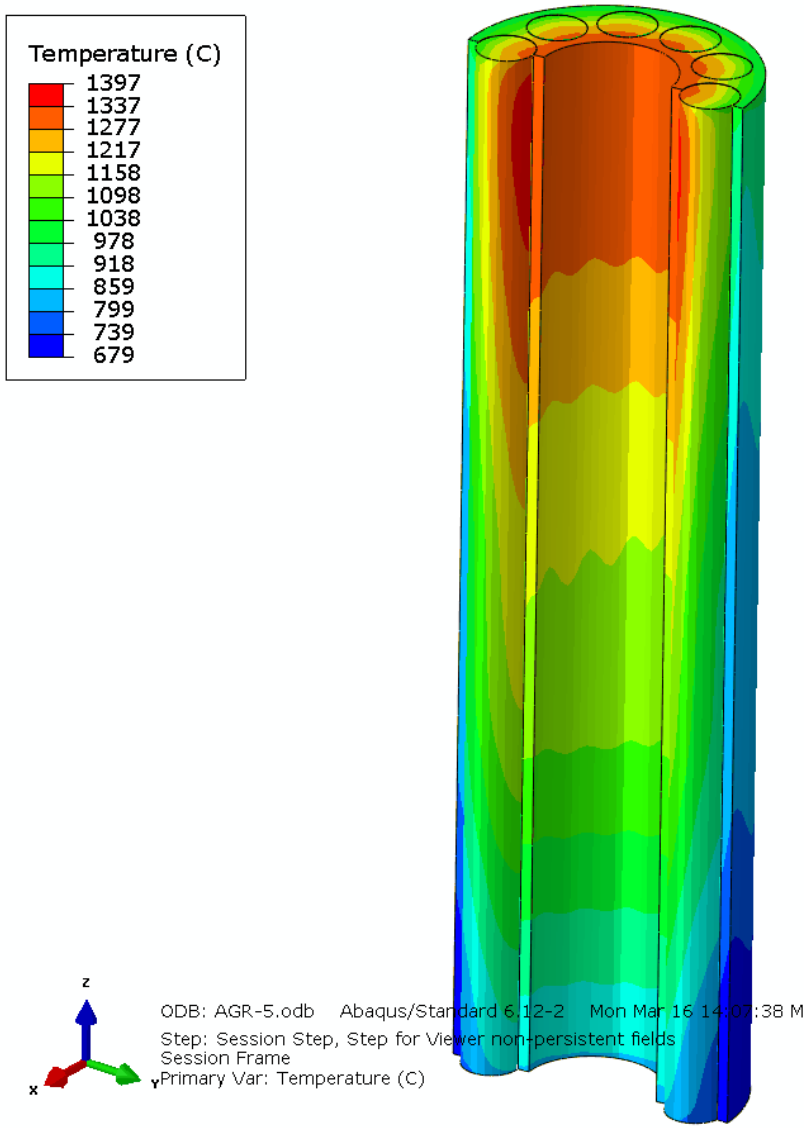

Unique Capsule 3 (AGR-7) Cross-Section

- By separating the graphite holder into two pieces the center can run hot, but the thru-tubes run cool
- Thermocouples in the hot inner section provide temperature measurements near the compacts – unlike AGR-3/4 which required thermal calculations across the inner gas gaps

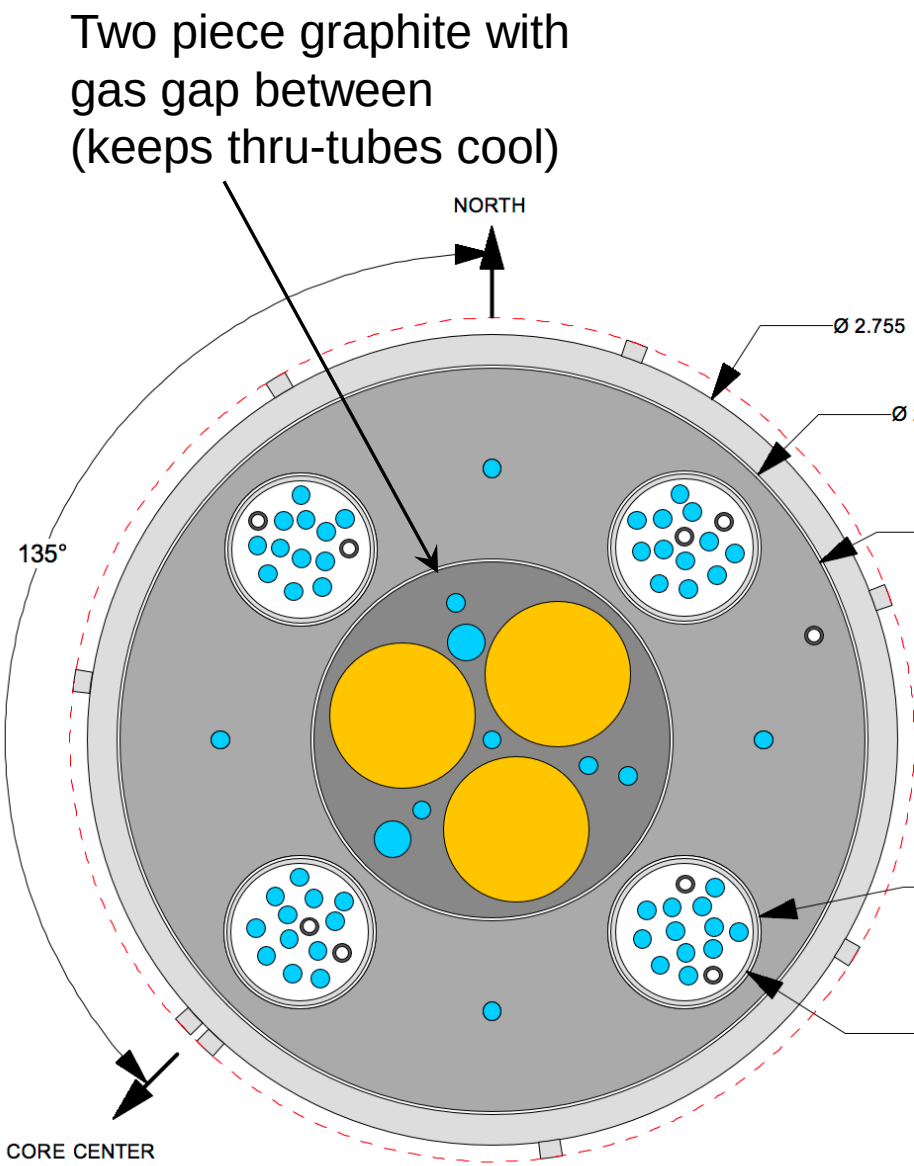

Unique Features of Capsule 5

- Capsule 5 is unique from the other capsules in that its instrumentation does not have to pass through any thru-tubes and the heated lengths are very short. All thermocouples from the top capsule in AGR-1 survived the entire irradiation period of 600 days
- We can place additional instrumentation (for evaluation) in Capsule 5 (more discussion on this later in presentation)

It is Difficult to Measure Very High Temperatures in a Reactor Environment

Why?

- Standard base metal thermocouples (Type K and Type N) drift at high temperatures due to metallurgical changes (above 600°C for Type K and above 1000°C for Type N)
- High temperature refractory thermocouples such as Types C, S, B, and R have high cross section alloying elements and are subject to rapid decalibration (drift) because their alloying elements transmute into other elements with different electromotive properties

Summary of Thermocouple Performance (survival) from the Three Previous Fuel Tests

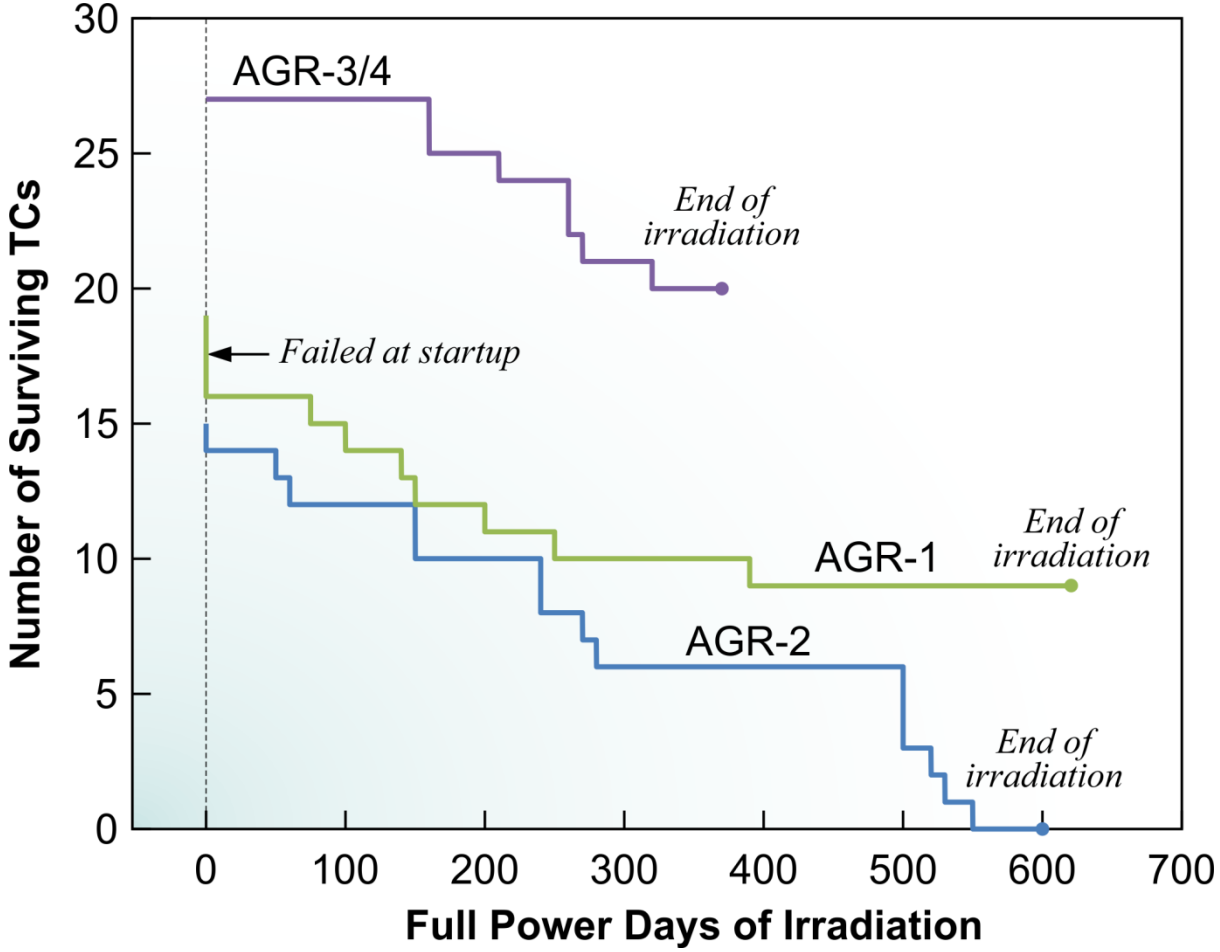

Results from 2005 Bakeoff Tests

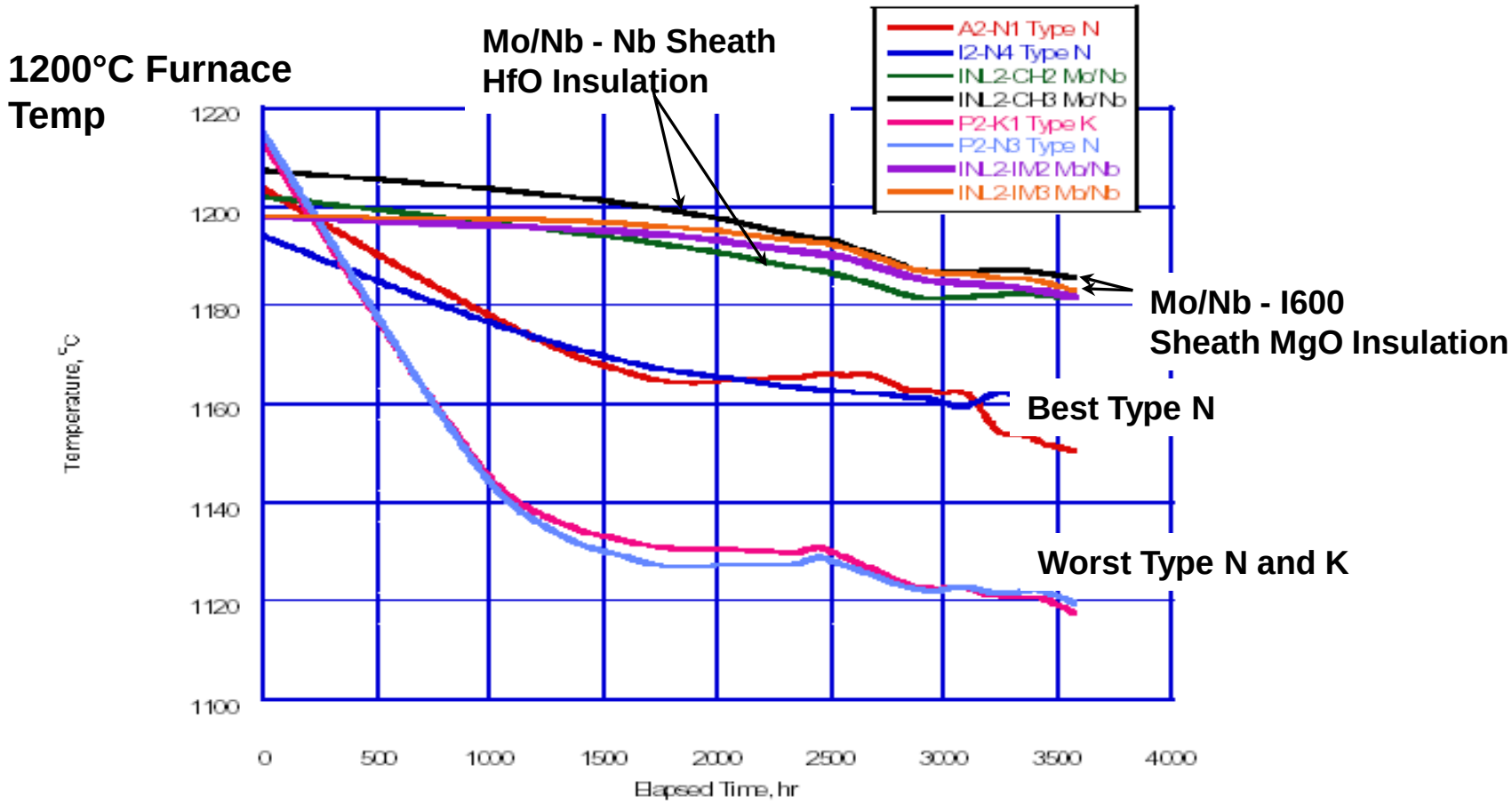

Testing by other researchers indicates that Type N thermocouples start drifting at about 1000°C

Thermocouple Varieties That Were Tested for Use in AGR-5/6/7

- Type N with I600 Sheath (standard – baseline against which others were compared against)
- Type N .092” dia vs .062”
- Type N with Haynes 214 Sheath
- Type N with Spinel (MgAl2O4) Insulation
- Type N with Cambridge Low Drift Special Alloy Sheath
- Type N with Moly Sheath and Loose Pack Ceramic Insulators
- Mo/Nb with HfO and Nb Sheath (HTIR-TCs)
- Other varieties of Mo/Nb thermocouples*

*Still being tested

2014 TC Test – Test set up

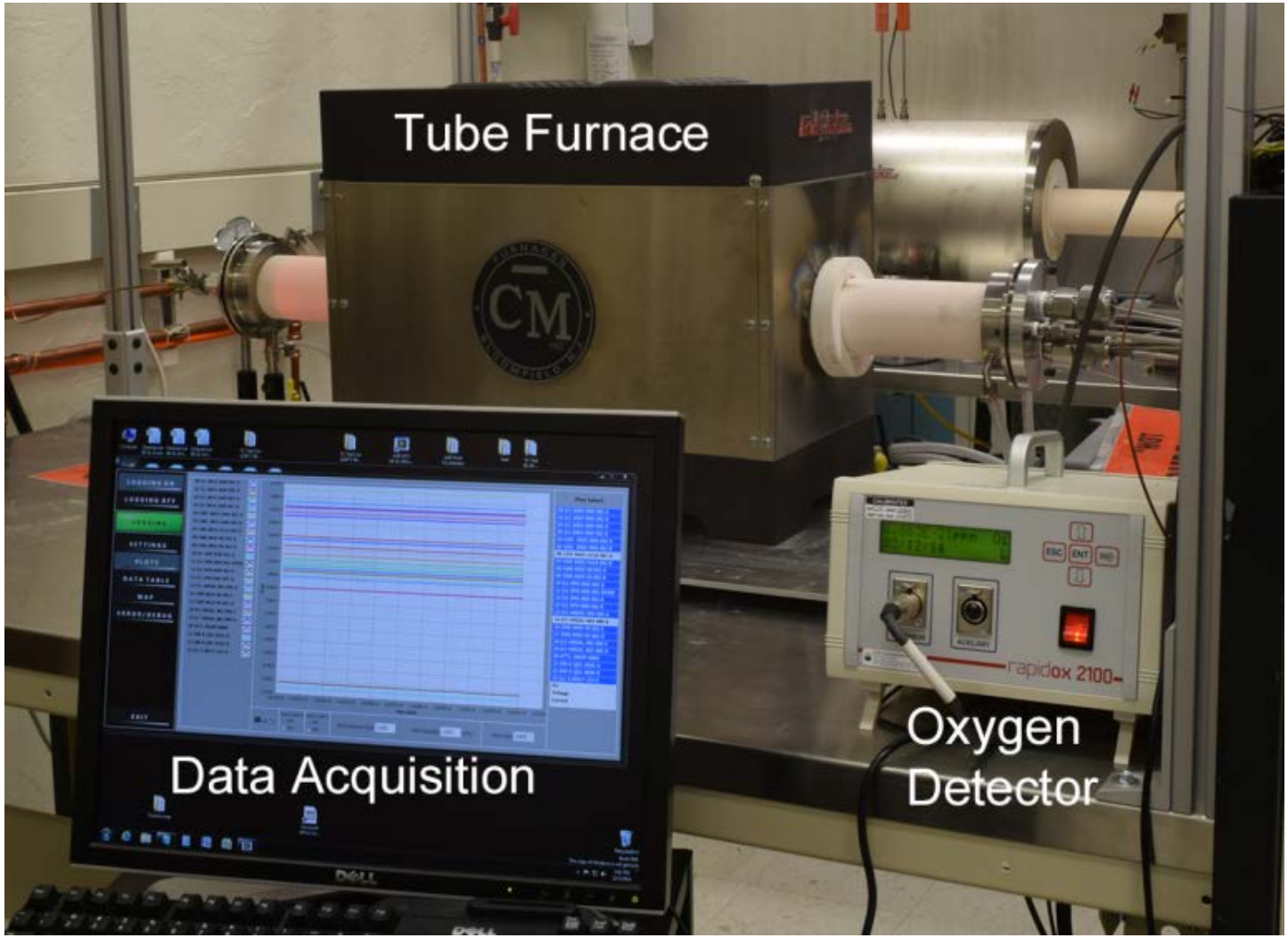

2014 TC Furnace Test Campaign Summary

The furnace test was conducted as follows:

- 2060 hrs at 1157°C
- 2006 hrs at 1207°C
- 201 hrs at 1258°C
- 266 hrs at 1301°C (with a 77 hr excursion at the beginning of this period to 1311°C)

This represents more than 6 months at temperature

Results from Furnace Testing

- Changes involving: Increased size, spinel insulation, and Haynes 214 sheath produced only a limited improvement in drift rate versus standard 1.57 mm Type N thermocouples.
- The special sheath material developed at Cambridge University reduced the drift rate markedly, and this thermocouple design offers the advantage of being just as flexible and physically robust as a standard Type N thermocouple. This Cambridge design appears well suited to operating in the 1000°C–1200°C range (and perhaps higher).
- The loose assembly Type N design was also drift resistant (arguably better than Cambridge), but is more prone to open circuit failure than the Cambridge design.
- The HTIR-TC design again demonstrated that it exhibits low drift; however, we are having some trouble with calibration inaccuracy. Another furnace test is currently in operation to test variations on the HTIR-TC design.

Results 2014 TC Test – Cambridge Special Alloy Sheath Instead of Inconel 600

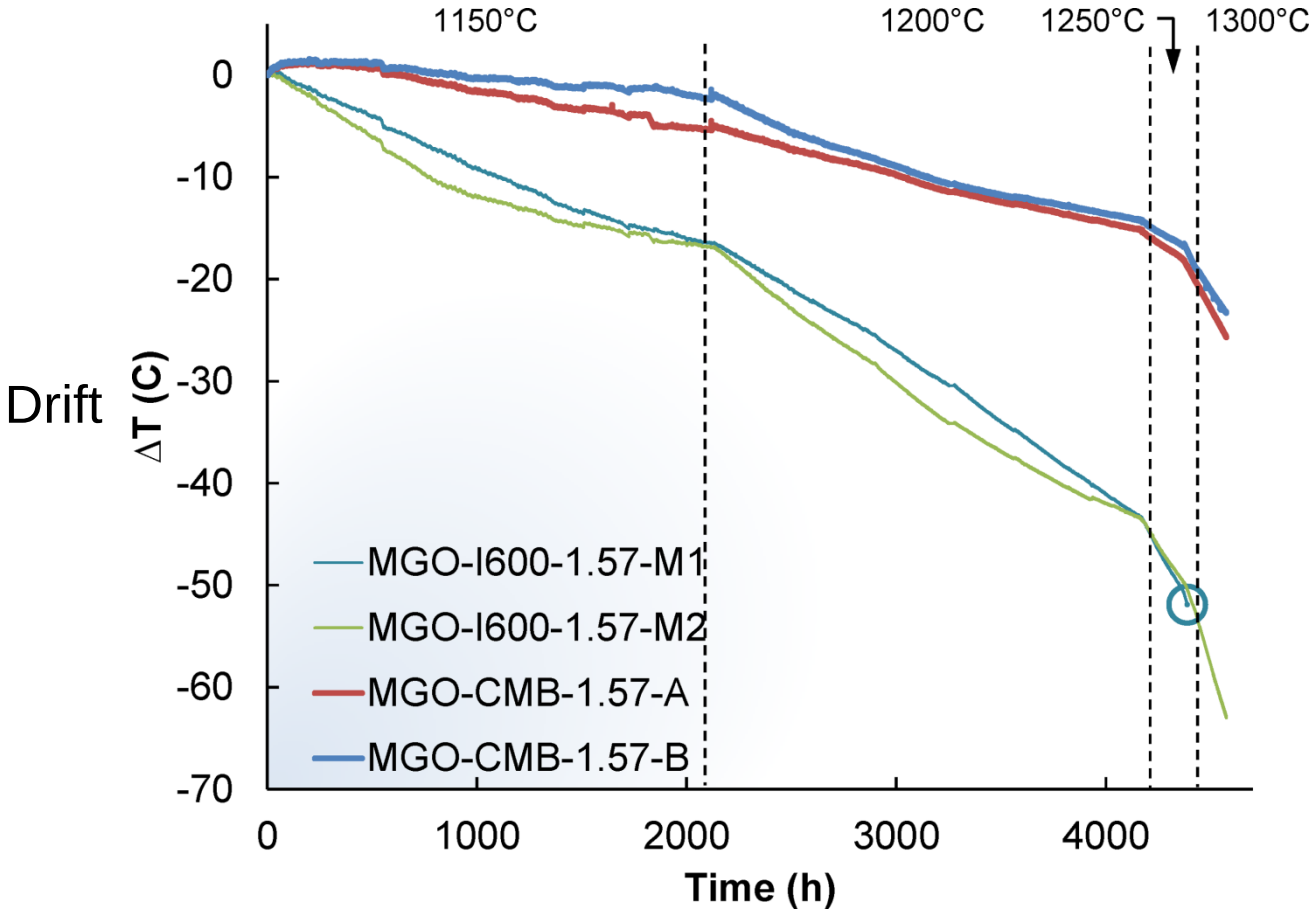

Results 2014 TC Test – HTIR-TC

Drift

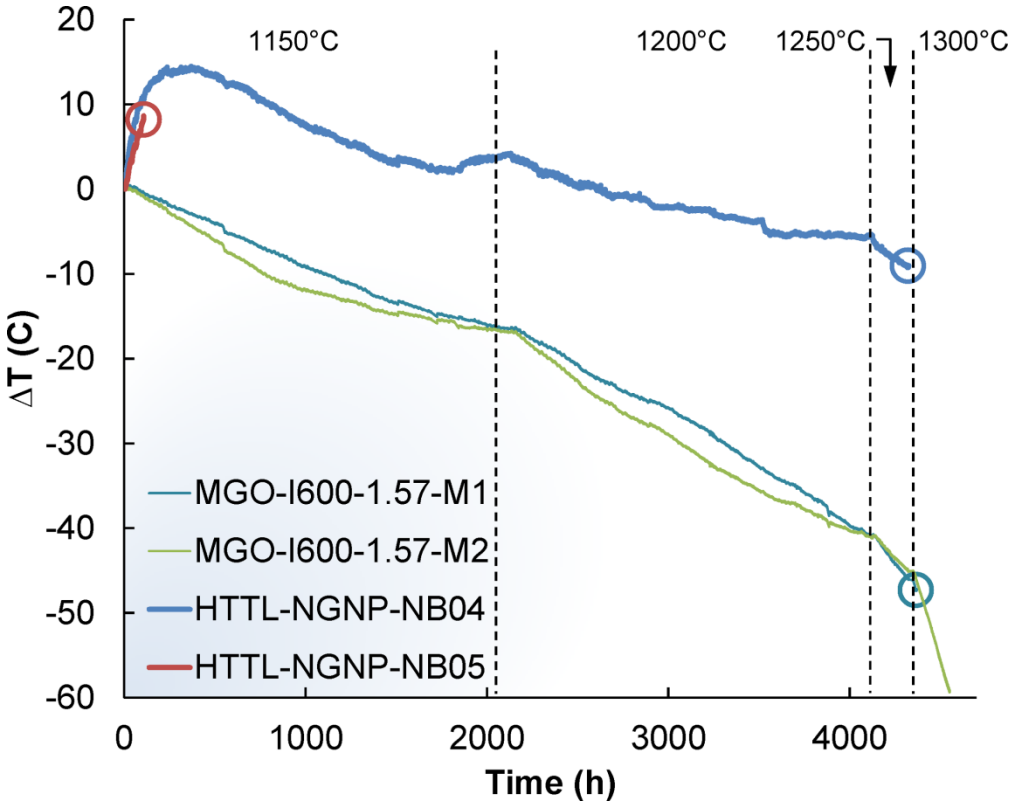

Results 2014 TC Test – HTIR-TC

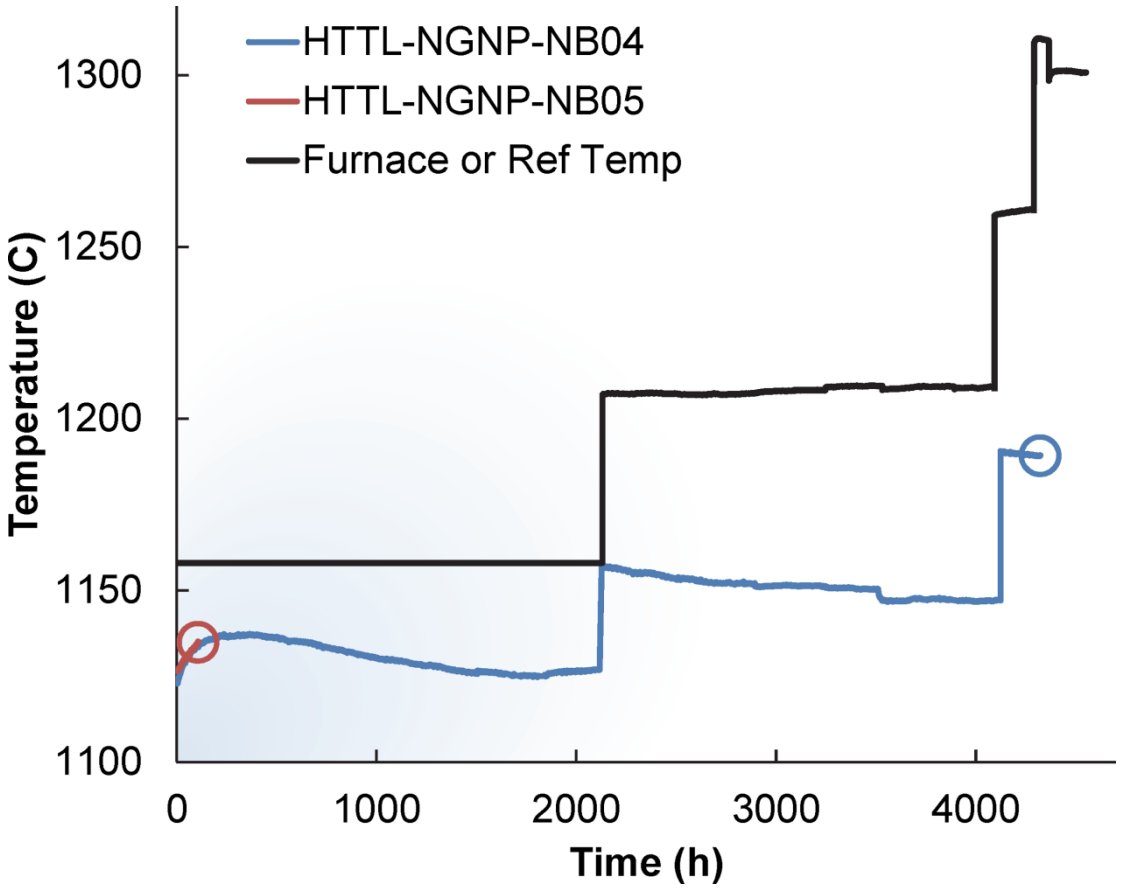

Refractory Sheathed Thermocouples have been Hard to Braze in the Past

- We plan on using both Nb and Mo sheathed thermocouples
- We used both of these materials in AGR-1 and they posed some problems when we tried to braze them to the stainless steel head

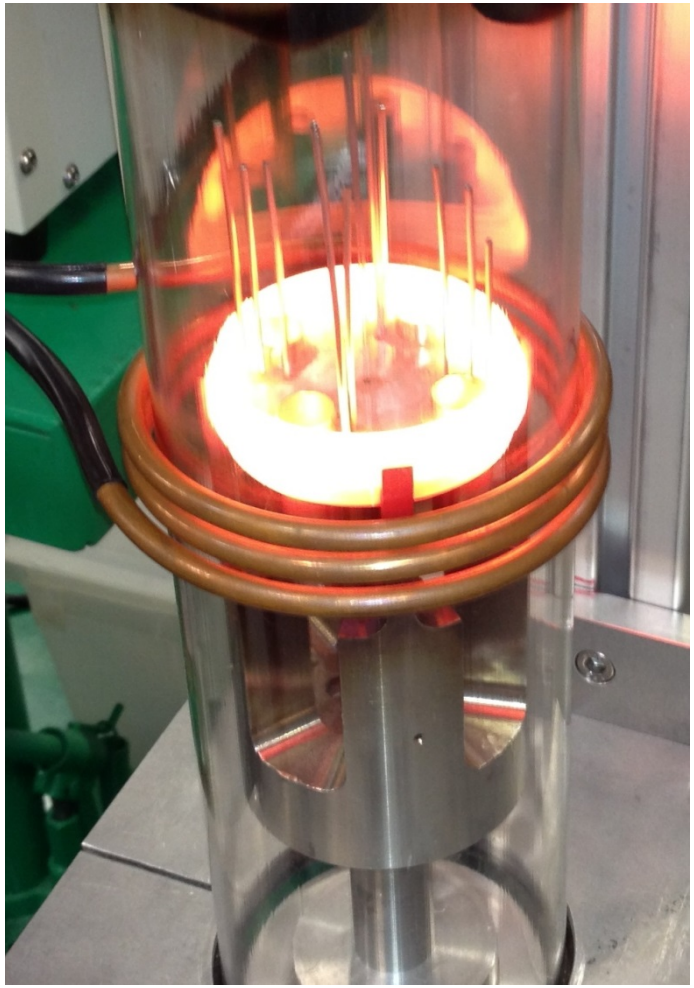

Problem of Brazing Refractory Sheathed Thermocouples Seems to be Solved

- With our nickel based filler metals these materials no longer pose a challenge

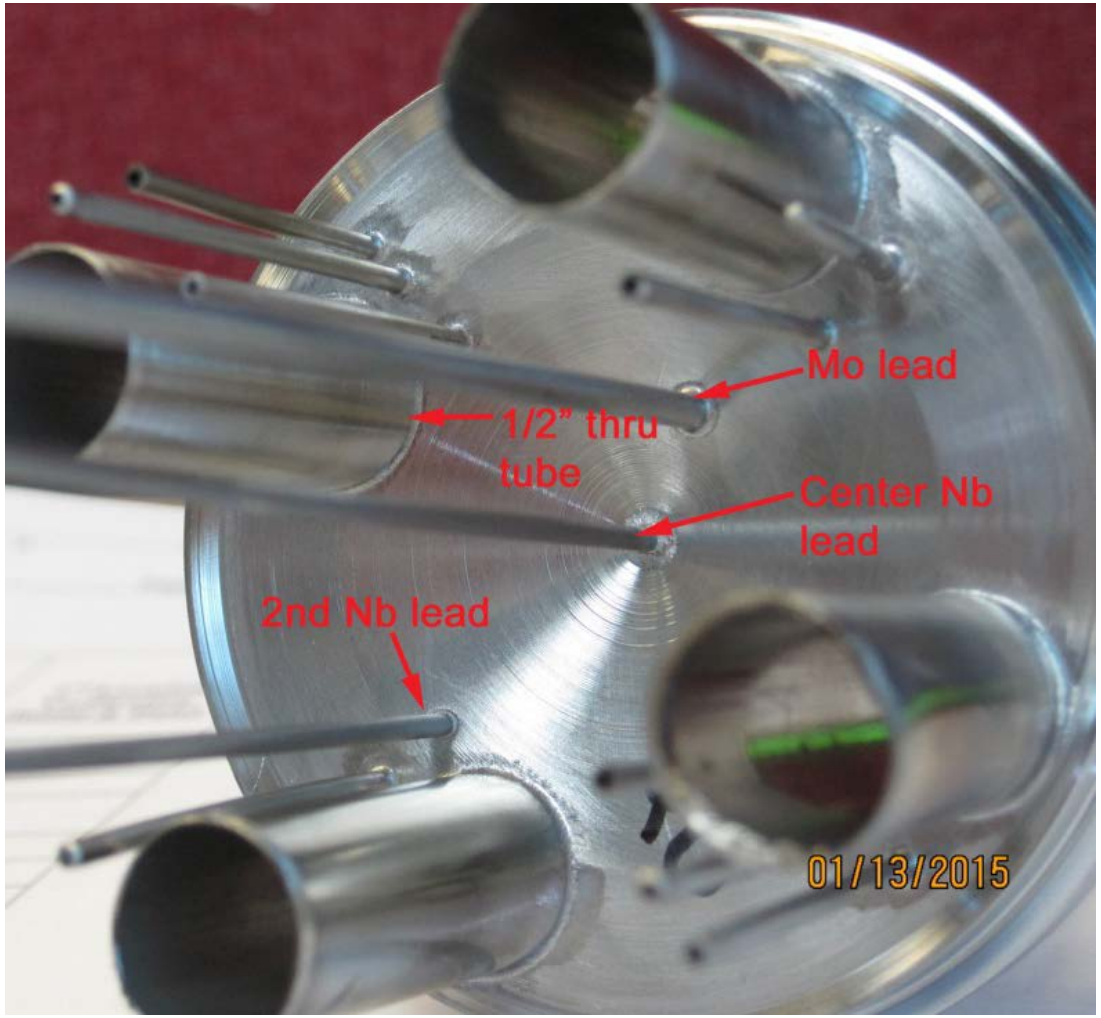

Cross Section of Braze Buttons with Mo and Nb Tubes

- Nearly perfect fill around both Mo and Nb tubes

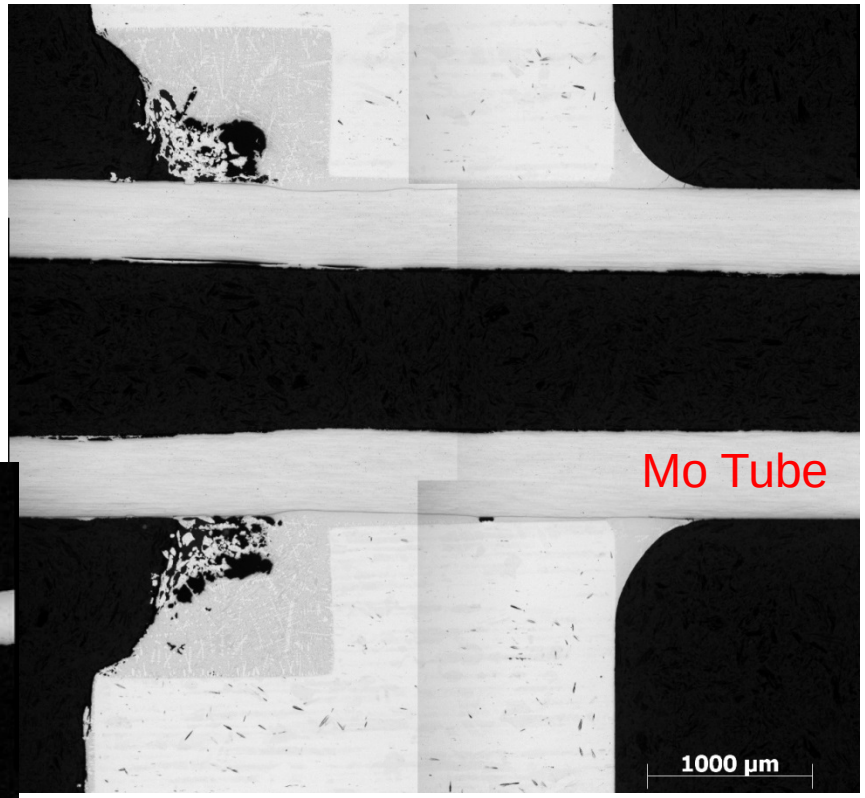

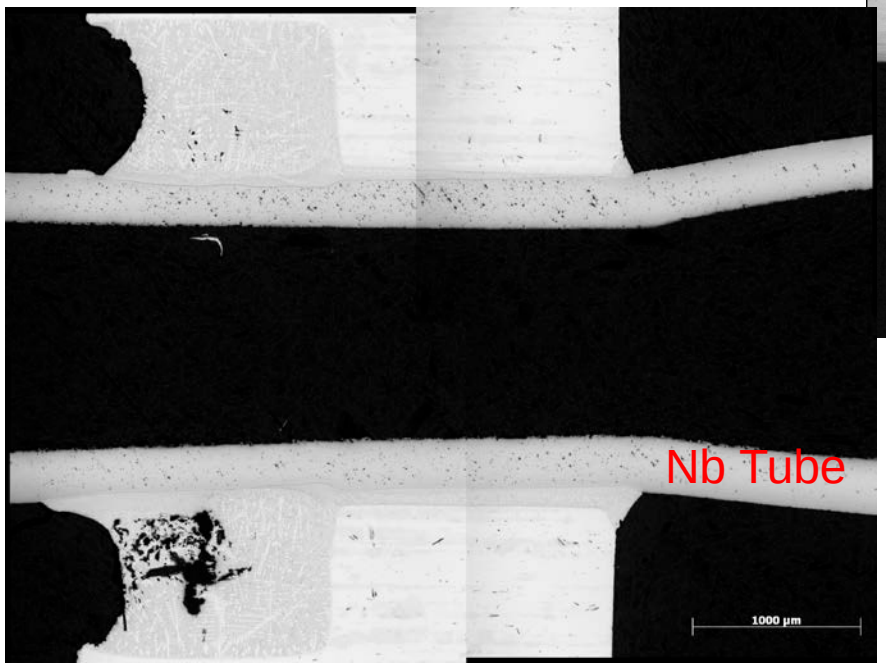

Capsule 2 Drawing Excerpt

INL.idw Rev 9

NOTES:

1. REMOVE ALL BURRS AND SHARP EDGES.
2. FOR METAL COMPONENTS, CLEANLINESS PER STD-7022, LEVEL C. FOR GRAPHITE COMPONENTS CLEANLINESS, SEE NOTES 3 & 4.
3. CARE SHOULD BE TAKEN TO AVOID CONTAMINATING GRAPHITE COMPONENTS DURING FABRICATION AND ASSEMBLY. WASH ALL TOOLS WITH ALCOHOL PRIOR TO USE, AND HANDLE GRAPHITE WITH CLEAN, WHITE, LINT FREE, COTTON GLOVES. DO NOT FABRICATE USING ANY CUTTING LUBRICANTS.
4. PRIOR TO ASSEMBLY, CLEAN GRAPHITE COMPONENT AS FOLLOWS: WEARING CLOTH OR NITRILE GLOVES, REMOVE ALL DUST AND DEBRIS USING AN AEROSOL PRESSURIZED DUST-OFF PRODUCT. THEN, ULTRASONICALLY CLEAN IN DE-IONIZED WATER FOR 20 MINUTES. RINSE WITH ALCOHOL AND ALLOW TO AIR DRY. DRY COMPONENTS IN A LABORATORY OVEN AT 130 °C IN AIR FOR 2 HOURS. ALL HANDLING AFTER CLEANING SHALL BE DONE USING CLEAN, DRY, LINT FREE, WHITE COTTON GLOVES.
5. PRESERVE AND PROTECT PER STD-7020, CLASS 1.
6. MARK PER STD-13122-3D2, USING 1/4" HIGH CHARACTERS, IN LOCATION SHOWN.
7. MARK PER STD-13122-3D1 WITH "CAP-2". USING 3/16" HIGH CHARACTERS, IN LOCATION APPROXIMATELY AS SHOWN.
8. BRAZE ALL THERMOCOUPLES AND GAS LINES RUNNING THRU ITEM 4 (CAPSULE TOP HEAD) PER INL TBD???????, USING ITEM 32 (BRAZE FILLER METAL). VISUALLY INSPECT ACCESSIBLE PORTIONS OF THE BRAZES WITH ACCEPTANCE CRITERIA PER THE FOLLOWING:
   1. ENSURE A COMPLETE 360° FILLET AROUND EACH TC AND GAS LINE ON EITHER THE TOP OR BOTTOM OF ITEM 4 (CAPSULE TOP HEAD).
9. TEMPORARILY MARK THERMOCOUPLES PER STD-13122-18 OR 19 WITH: T-X-Y. WHERE "X" IS THE CAPSULE (ASSEMBLY) NUMBER AND "Y" DENOTES THE POSITION IN THE CAPSULE AS SHOWN. NOTE THAT LABELS MUST BE DESIGNED SUCH THAT THEY CAN PASS THROUGH THE THRU TUBES (ITEM 14) DURING CAPSULE TRAIN ASSEMBLY (SEE DRAWING 604660).
10. TEMPORARILY MARK GAS LINES PER STD-13122-18 OR 19 WITH: GL-X-IN OR OUT. WHERE "X" IS THE CAPSULE (ASSEMBLY) NUMBER AND "IN" OR "OUT" DENOTES WHETHER THE LINE IS SUPPLY OR EXHAUST. NOTE THAT LABELS MUST BE DESIGNED SUCH THAT THEY CAN PASS THROUGH THE THRU TUBES (ITEM 14) DURING CAPSULE TRAIN ASSEMBLY. (SEE DRAWING 604660).
11. INSTALL ITEM 20 (FUEL COMPACT) PER CAPSULE ASSEMBLY LOADING SPECIFICATIONS.
12. ALL FLUX WIRE PACKAGES ARE ENCAPSULATED IN A Ø.059 (1.5 mm) 99.99% PURE QUARTZ TUBE, FILLED WITH 100% He, AND FUSED CLOSED.
13. GRAPHITE PER CGI-770.
14. PRIOR TO ASSEMBLY, COAT SIDE WALL OF ITEM 5 (CAPSULE BODY) WITH TWO COATS OF ITEM 33 (NEOLUBE).
15. ASME B&PV CODE SECTION III, CLASS 3 MATERIAL.
16. QUALITY LEVEL DETERMINATION PER ATR COMP-000007, UNLESS OTHERWISE SPECIFIED.
17. QUALITY LEVEL DETERMINATION PER RTC-000485.
18. ORIENT DOUBLE SET OF NUBS ON ITEM 5 (CAPSULE BODY) AND ARROW APPROXIMATELY AS SHOWN.
19. APPLY A THIN COAT OF ITEM 33 TO THE BOTTOM 1/2" OF ITEM 14 (THRU TUBES) PRIOR TO ASSEMBLY. FLARE THE BOTTOM OF ITEM 14 (THRU TUBES) AT -1 ASSEMBLY.
20. AFTER CUTTING TO LENGTH, TOTAL DIAMETRAL VARIATION (OD), PART TO PART, OF ITEM 14, MUST BE LESS THAN .001 INCH. DIAMETRAL CLEARANCE BETWEEN ITEM 14 AND THE HOLES IN THE CAPSULE BODY, ITEM 5, SHALL BE LESS THAN .001. HOLES IN CAPSULE BODY MAY BE ADJUSTED FROM SPECIFIED DIMENSION TO ACHIEVE THIS CLEARANCE.
21. ⟨⟩ INDICATES A QUALITY INSPECTION IS REQUIRED.

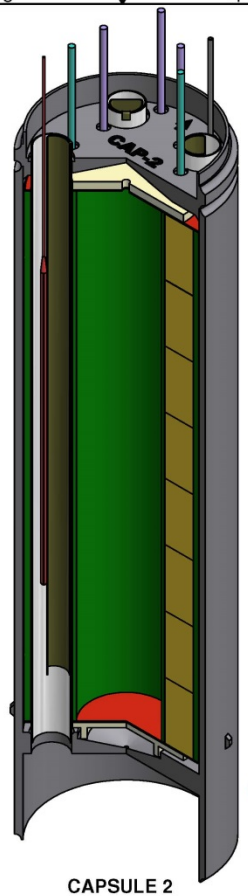

CAPSULE 2

NOT RELEASED
INFORMATION ONLY
NOT APPROVED FOR
FABRICATION OR CONSTRUCTION.

8	7	6	5	4	3	2	1	SHEET
-	-	-	-	-	-	-	-	REV

REV STATUS OF SHEETS

REVISIONS

REV	DESCRIPTION	EFFECTIVE DATE

		QTY REQD		PART OR IDENTIFYING NO.	NOMENCLATURE OR DESCRIPTION	MATERIAL/SPECIFICATION OR VENDOR NAME	ITEM NO.
		1			FLUX WIRE PACKAGE, Nb, 99.99% PURE, .059 OD X .34 LG (12)		28
		1			FLUX WIRE PACKAGE, Fe, 99.99% PURE, .059 OD X .34 LG (12)		27
							26
	4			604680-2	THERMOCOUPLE, TYPE SPINEL-N Ø.092 OD X 19-23' LG, SPINEL INSUL, I 600 SHEATH, ASTM E235		25
1	4			604680-1	THERMOCOUPLE, TYPE STD-N Ø.092 OD X 19-23' LG, MgO INSULATION, I 600 SHEATH, ASTM E235		24
							23
1					BIFILAR VANADIUM SPND (SELF-POWERED NEUTRON DETECTOR)	THERMOCOAX	22
							21
		32			FUEL COMPACT	AS DIRECTED BY PROJECT	20
							19
		8		-18	TC SLEEVE - LARGE	TUBING, Ø.115 X .010 WALL MOLYBDENUM 99.95% PURE	18
		1		-17	GAS-IN SLEEVE	TUBING, Ø.085 X .010 WALL Nb / 1% Zr	17
		1		-16	GAS-IN GETTER TUBE	TUBING, Ø.125 X .015 WALL ZIRCONIMUM ALLOY 702	16
1		3		-15	SPACER TUBE	TUBING, .375 OD X .010 WALL TITANIUM GR 2	15
	4			-14	THRU TUBE	TUBING, Ø.500 OD X .016 WALL X 9.027 LG, SEAMLESS 304/304L ASTM A213	14
		2		-13	TOP GRAFOIL DISK	GRAFOIL, GRADE GTA .010 THK GRAFTEC	13
		1		-12	TOP SPACER	AmZirOx 86 ZIRCONIA ASTRO MET INC.	12
		2		-11	BOTTOM GRAFOIL DISK	GRAFOIL, GRADE GTA .010 THK GRAFTEC	11
		1		-10	BOTTOM SPACER	AmZirOx 86 ZIRCONIA ASTRO MET INC.	10
		1		-9	FLUX WIRE PLUG	TUBING, Ø.0625 OD X .010 WALL X .500 LG 304 SST	9
							8
		2		-7	FLUX WIRE PLUG	GRAPHITE, IG 430 TOYO TANSO (13)	7
		1		-6	OUTER GRAPHITE HOLDER	GRAPHITE, IG 430 TOYO TANSO (13)	6
(17)		1		-5	CAPSULE BODY	BAR, 316/316L SST (15) ASME SA479	5
(17)	1			-4	CAPSULE TOP HEAD	BAR, 316/316L SST (15) ASME SA479	4
		1		-3	CAPSULE 2 SPACER/SPND ASSEMBLY		3
		1		-2	CAPSULE 2 HEAD ASSEMBLY		2
(17)				-1	CAPSLUE 2 ASSEMBLY		1
-3	-2	-1		PART OR IDENTIFYING NO.	NOMENCLATURE OR DESCRIPTION	MATERIAL/SPECIFICATION OR VENDOR NAME	ITEM NO.

PARTS LIST

		QTY REQD		PART OR IDENTIFYING NO.	NOMENCLATURE OR DESCRIPTION	MATERIAL/SPECIFICATION OR VENDOR NAME	ITEM NO.
		AR			NEOLUBE	HURON INDUSTRIES	33
	AR				BRAZE FILLER METAL, BNI-12, AWS 5.8	WALL COLMONOY CORP	32
	AR					TUBING, Ø.062 ±.002 X .010 ± .002 WALL X 10 FT LG MIN, 304/304L SST, SEAMLESS ASTM A213	31
AR					WIRE, 25 GA (Ø.020)	316/316 SST	30
		1			FLUX WIRE PACKAGE, V + 1% Co 99.99% PURE, .059 OD X .34 LG (12)		29
-3	-2	-1		PART OR IDENTIFYING NO.	NOMENCLATURE OR DESCRIPTION	MATERIAL/SPECIFICATION OR VENDOR NAME	ITEM NO.

PARTS LIST CONTINUED

-1	604660
DASH NO.	NEXT ASSY
APPLICATION	

DIMENSIONING AND SYMBOLS DIFFERS FROM ASME Y14.5M AND STD-10011
UNLESS OTHERWISE SPECIFIED SURFACE ROUGHNESS √
DIMENSIONS AND TOLERANCES ARE IN INCHES
TOLERANCES: DECIMALS: .X ± .1 / .XX ± .05 / .XXX ± .010
FRACTIONS ± 1/8
ANGULAR ± 2°
DO NOT SCALE DRAWING

REQUESTER: M. DAVENPORT
RESP ENGR: J. PALMER
DESIGN: J. PALMER
DRAWN: N. OLDHAM
PROJECT NO.
SPCL CODE: AGR 5/6/7
FOR REVIEW/APPROVAL SIGNATURES SEE ECR NO.
EFFECTIVE DATE:

Idaho National Laboratory

ATR
ADVANCED GAS REACTOR (AGR 5/6/7)
CAPSULE 2
ASSEMBLY AND DETAILS

SIZE D | CAGE CODE 01MF3 | INDEX CODE NUMBER AREA 533 TYPE 0670 SC 96 SEQ 081 | DWG- 604662 | REV -
SCALE: NONE | SHEET 1 OF 8
ATR0812

Path: C:\Vault\local\Projects\ATR\Reactor Experiments\AGR5-6-7\604662.idw
File:604662P1
Date:7/1/2015

Capsule 2 Drawing Excerpt

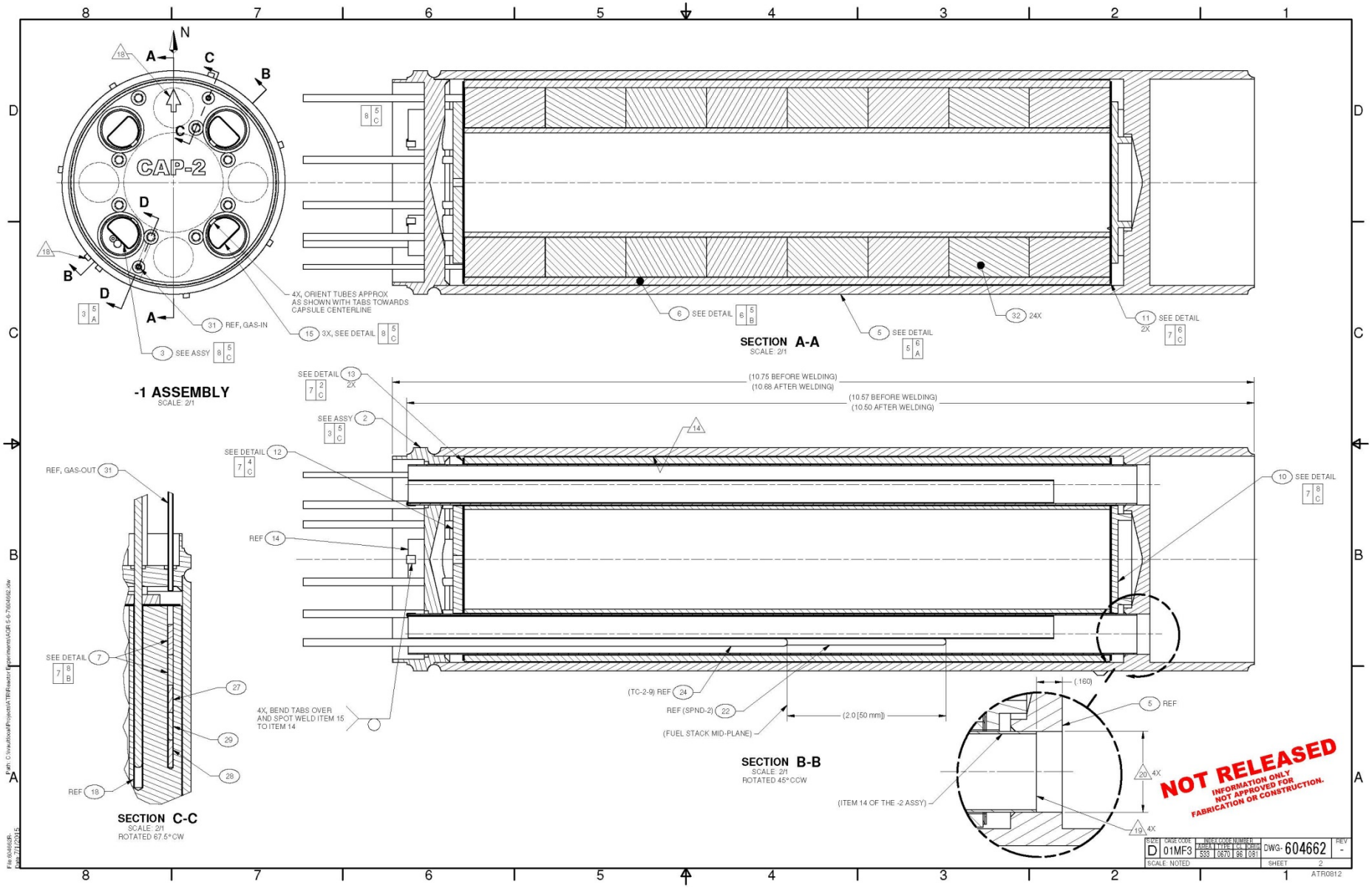

Capsule 2 Drawing Excerpt

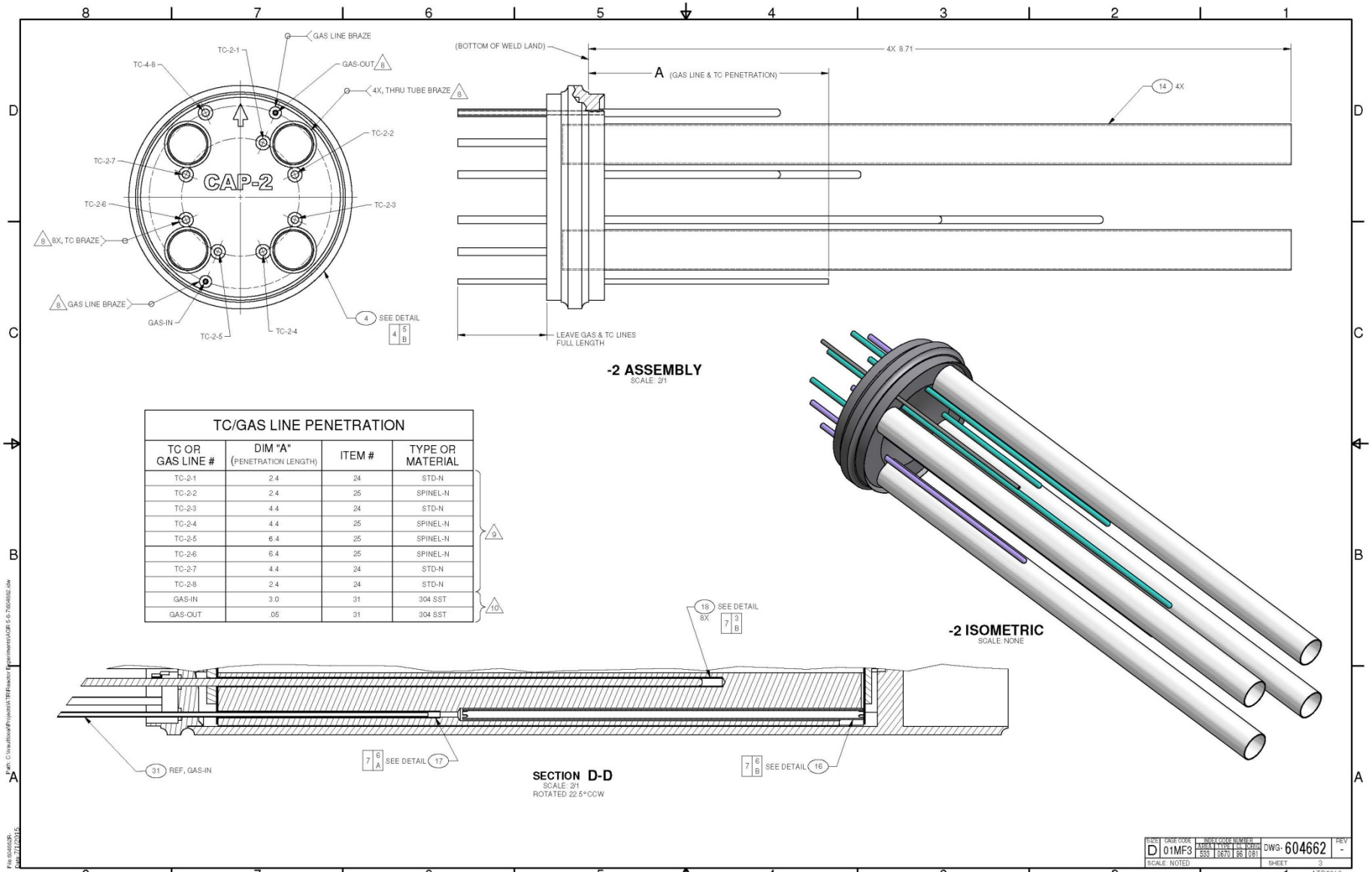

Capsule 1 Thermocouple Placement

- Capsule 1 has 60% of the AGR-5/6 particles, so a large number of TCs is appropriate
- The TCs around the outside of the fuel operate at ~900C so they should survive well
- Inside the fuel ring the operating temperatures are borderline for Type N

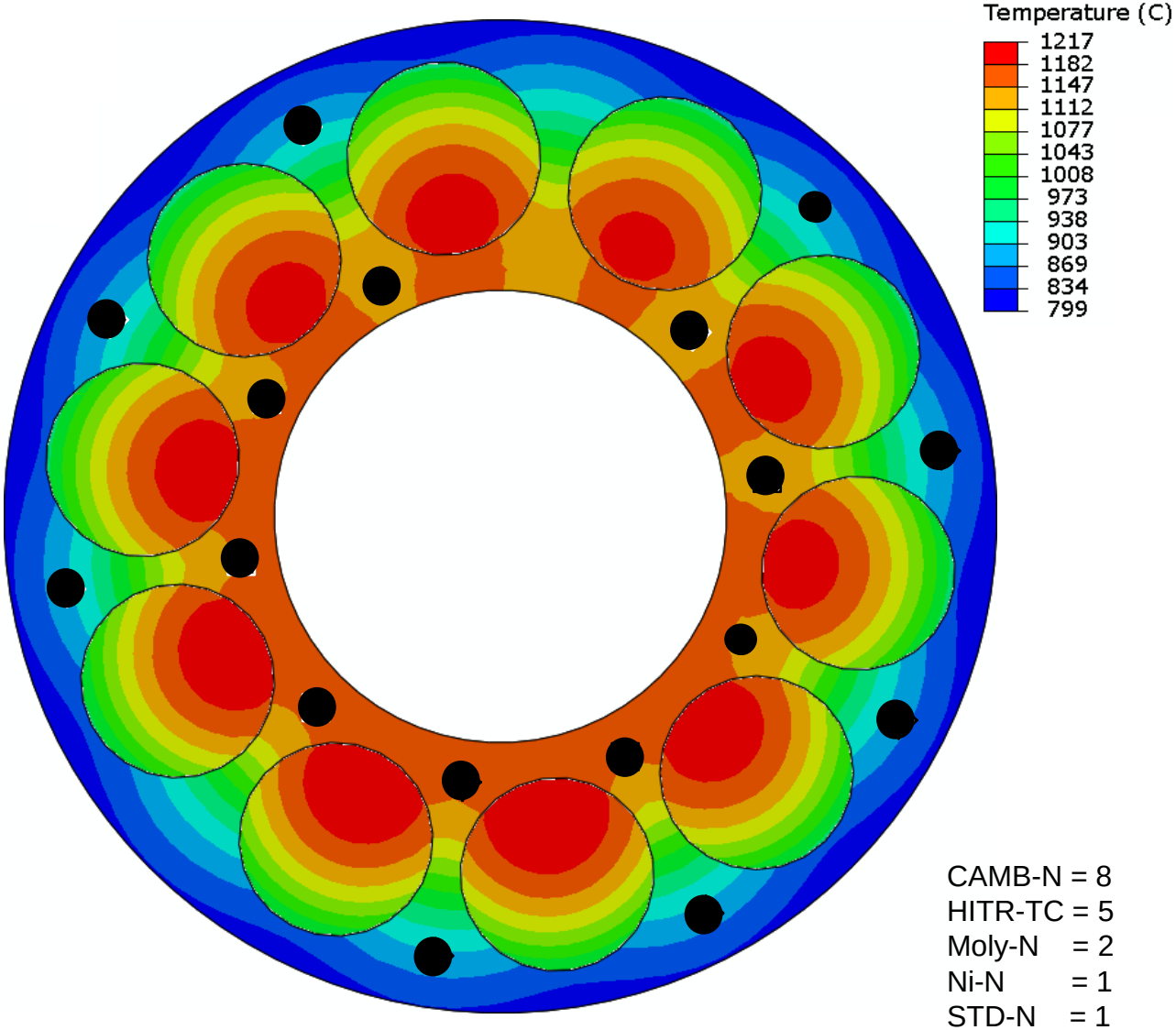

CAMB-N = 8
HITR-TC = 5
Moly-N = 2
Ni-N = 1
STD-N = 1

Capsule 2 Thermocouple Placement

- Capsule 2 TC temperatures are within the range of standard Type N TCs ~ 900°C
- Average thru tube temperatures are ~800°C, so the TCs from Capsule 1 should tolerate them well

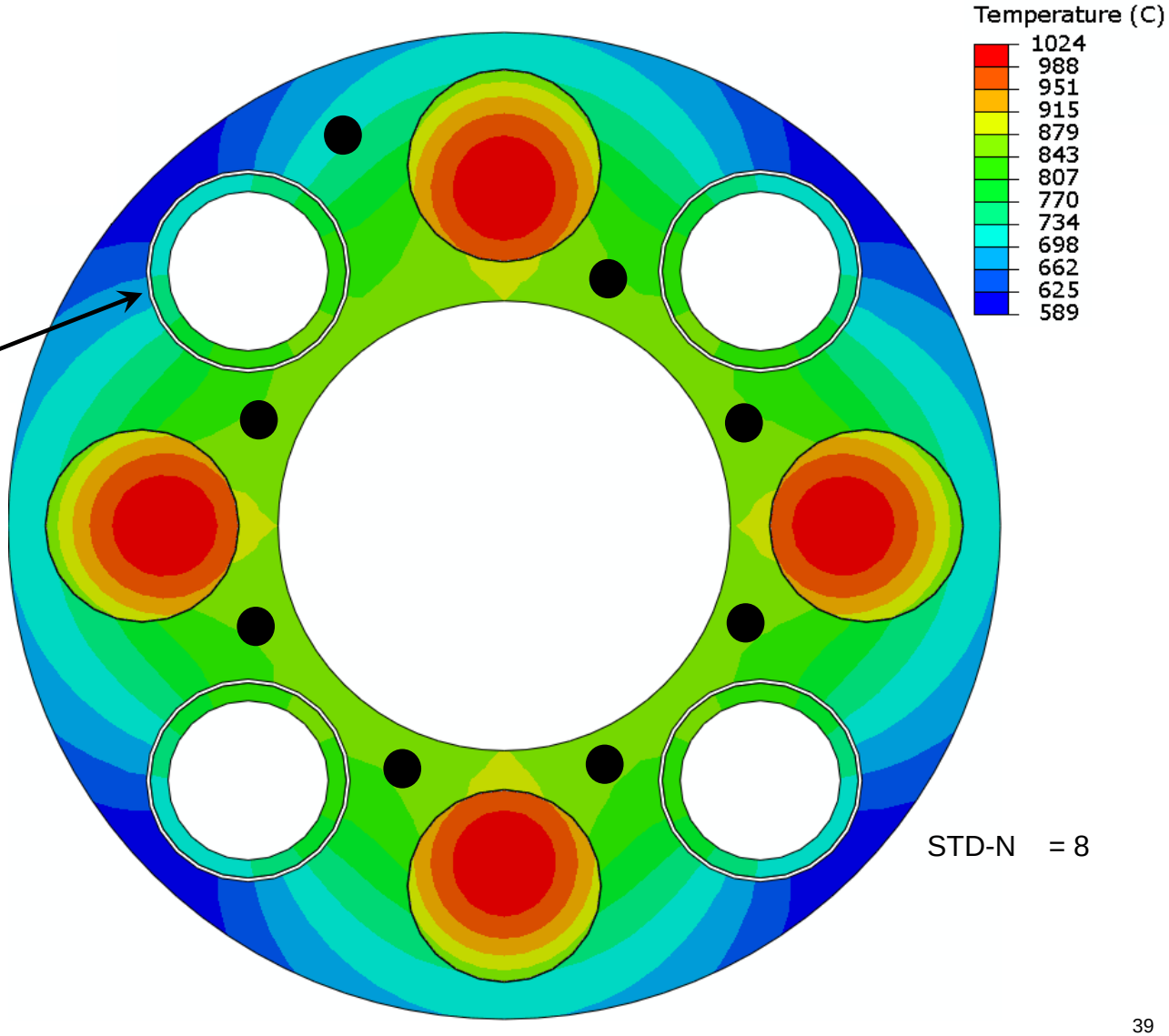

Capsule 3 Thermocouple Placement

- Most of the inner graphite has temperatures beyond the capabilities of Type N TCs
- HTIR-TCs are proposed for the hottest locations
- The outer graphite has much lower temperatures and standard Type N TCs are acceptable here

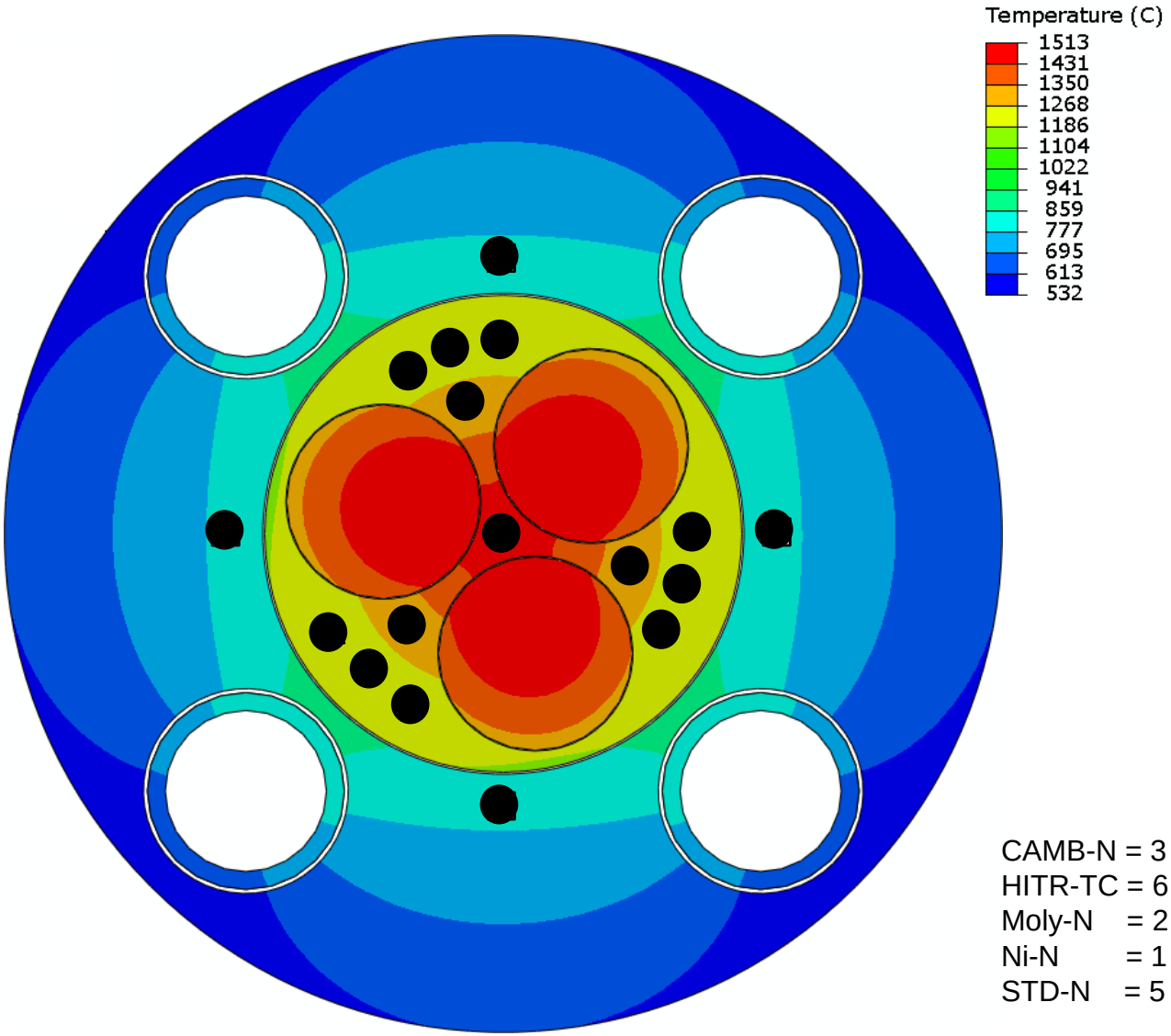

CAMB-N = 3
HITR-TC = 6
Moly-N = 2
Ni-N = 1
STD-N = 5

Sleeving of Thermocouples

- Concerns have been raised that transition metals such as Fe, Ni, Cr when placed closer than 3 mm to the fuel can migrate through the graphite and attack the SiC layer of the fuel particles
- We plan on sleeving any TC that has a non-refractory sheath when it is closer than 5 mm to the fuel
- We were planning on using Nb sleeves, but based on the TC furnace testing, molybdenum appears to be the better option

Complete Test Train Assembly

NOTES:

1. REMOVE ALL BURRS AND SHARP EDGES.
2. CLEANLINESS PER STD-7022, LEVEL C.
3. WELD PER INL WELD PROCEDURE SPECIFICATION S2.0 OR S5.0 USING ITEM 26 (WELD FILLER METAL). THIS IS AN ASME B&PV CODE, SECTION III, CLASS 1 WELD.
4. WELD PER INL WELD PROCEDURE SPECIFICATION S2.0 OR S5.0 USING ITEM 26 (WELD FILLER METAL). THIS IS AN ASME B&PV CODE, SECTION III, CLASS 3 WELD.
5. VISUALLY INSPECT WELDS PER TPR-13442, WITH ACCEPTANCE CRITERIA PER APPENDIX B.
6. LIQUID PENETRANT INSPECT WELDS PER INL TECHNICAL PROCEDURE TPR-13437 APPENDIX A OR B, WITH ACCEPTANCE CRITERIA PER APPENDIX J1 (WELDS).
7. ALL THERMOCOUPLE OR TUBING BEND RADII 10X THE O.D. OR GREATER. BEND AS REQUIRED FOR DESIRED PLACEMENT AND FIT.
8. MARK PER STD-13122-2D1 WITH 604652-1 IN .25 HIGH CHARACTERS, IN LOCATION APPROXIMATELY AS SHOWN.
9. RADIOGRAPH INSPECT WELD PER TPR-13430 WITH ACCEPTANCE CRITERIA PER APPENDIX C. IF RADIOGRAPH IS NOT POSSIBLE, THEN CONTACT PROJECT FOR SUBSTITUTION OF ULTRASONIC INSPECTION IN PLACE OF RADIOGRAPH PER PARAGRAPH NB-5279 OF THE ASME BOILER AND PRESSURE VESSEL CODE.
10. ATTACH TEST TRAIN GAS LEAD-IN TUBE TO GAS LINE GL-1-IN, USING ITEM 21 (WIRE).
11. TEMPORARILY MARK BOTH ENDS OF CONDUCTORS PASSING THROUGH ITEM 15 (FEED THROUGHS) PER PIN-OUT SCHEDULE ON SHEET 3.
12. MAKE GAS LINE CONNECTIONS PER AGR-5/6/7 GAS LINES CONNECTION SCHEDULE ON SHEET 3.
13. WRAP ITEMS 20 & 21 (SHIM STOCK & WIRE) AROUND THERMOCOUPLES AND GAS LINES AS NECESSARY TO PROTECT DURING WELDING.
14. ASME B&PV CODE SECTION III, CLASS 1 MATERIAL.
15. MARK PER STD-13122-2D1 OR 3D1 USING .5 HIGH CHARACTERS AS SHOWN. LOCATE APPROXIMATELY AS SHOWN.
16. PRIOR TO WELDING, ENSURE THAT ALL ITEMS ARE ALIGNED WITHIN ±3°, USING ALIGNMENT MARKS AND DOUBLE NUBS. ALIGNMENT MARKS ARE TOWARDS CORE AND 180° FROM KEY ON CLOSURE PLUG.
17. USING ITEM 18 (NEOLUBE) LUBRICATE THREADED CONNECTION OF CONAX GLAND SEAL NUT AS REQUIRED.
18. AFTER INSTALLING ITEM 19 (TUBING) AND ITEM 15 (HIGH DENSITY FEED THROUGH), TORQUE CONAX SEALING GLANDS TO 158 ±8 FOOT POUNDS.
19. PRESSURE AND LEAK TEST THE COMPLETED ASSEMBLY PER 2007 ASME B&PV CODE SECTION III, ND-6300, USING HIGH PURITY ARGON GAS AT A TEST PRESSURE OF 472 PSIG +15/ -0 PSI AND HOLD FOR A MINIMUM OF 10 MINUTES. EXAMINATION FOR LEAKAGE SHALL BE BY SOAP BUBBLE OF ALL WELD JOINTS AT A PRESSURE OF 429 PSIG +/- 10 PSI PER ND-5380.
20. AFTER THE PNEUMATIC LEAK TEST, PERFORM HELIUM LEAK TEST ON COMPLETED -1 ASSEMBLY. PLACE ASSEMBLY WITHIN A HELIUM FILLED BAG (50% MINIMUM HELIUM CONCENTRATION) AND EVACUATE -1 ASSEMBLY. ACCEPTANCE CRITERIA: NO LEAKAGE GREATER THAN 1.0 E-07 CC/SEC.
21. SAFETY LOCK WIRE ITEM 17 (SCREWS) IN PLACE USING ITEM 21 (WIRE).
22. FOR ITEMS 13 THRU 24, QUALITY LEVEL DETERMINATION PER ATR COMP-000007.
23. DRY WEIGHT OF ASSEMBLY IS APPROXIMATELY 270 LBS.
24. MEASUREMENTS PERFORMED AS PART OF WO 106077 DETERMINED THAT THE DISTANCE BETWEEN THE ATR CORE AND THE TOP HEAD IS ABOUT .313 INCH GREATER THAN THE DESIGN DRAWINGS INDICATE (THE LOCATION OF THE DISCREPANCY IS NOT KNOWN). THEREFORE, .313 INCH HAS BEEN ADDED TO THE HANGAR ROD PORTION OF THE TEST (ITEM 604656-1) TO PUT THE IN-CORE PORTION OF THE TEST AT THE CORRECT ELEVATION. NOTE THAT ALL ELEVATION DIMENSIONS SHOWN ON THIS DRAWING REFLECT THE STANDARD ATR DESIGN DRAWING ELEVATIONS.
25. BASED ON EXPERIENCE FROM ASSEMBLY OF THE AGC-1 EXPERIMENT WHICH USED INL WELD PROCEDURE SPECIFICATION S5.0, EACH WELD IS EXPECTED TO SHRINK APPROXIMATELY .035 INCH WITH SIMILAR THICKNESS MATERIAL.
26. IN ORDER TO ACHIEVE DESIRED OVERALL LENGTH, ITEM 8 (UPPER 5" PIPE) TO BE CUT TO LENGTH AFTER MAKING ALL WELDS EXCEPT WELD W-2. CONTACT PROJECT ENGINEERING PRIOR TO CUTTING ITEM 8 (UPPER 5" PIPE) TO LENGTH.
27. MARK ON HEX FLATS OF ITEM 14 (UNION) PER STD-13122-2D1 WITH: X-I OR X-O WHERE "X" IS THE CAPSULE ASSEMBLY NUMBER AND "I" OR "O" DENOTES WHETHER THE LINE IS SUPPLY OR EXHAUST.
28. ITEMS 28 (HEAT SHRINK TUBING) AND 29 (HEAT SHRINK TUBING) ARE TO BE USED AS REQUIRED TO ORGANIZE AND PROTECT THERMOCOUPLE EXTENSION WIRE.

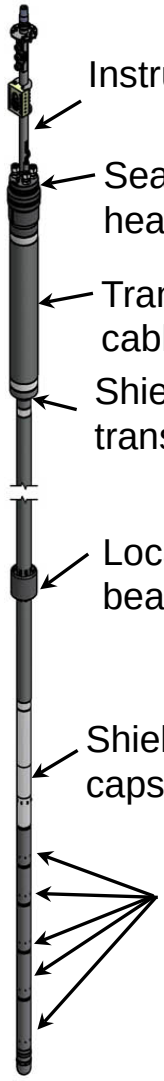

-1 ASSEMBLY
SCALE: 1/10

NOT RELEASED
INFORMATION ONLY
NOT APPROVED FOR FABRICATION OR CONSTRUCTION.

QTY REQD	PART OR IDENTIFYING NO.	NOMENCLATURE OR DESCRIPTION	MATERIAL/SPECIFICATION OR VENDOR NAME	ITEM NO.
AR	FP301	HEAT SHRINK TUBING, Ø1 BLACK, POLYOLEFIN	3M OR APPROVED EQUAL	29
AR	FP301	HEAT SHRINK TUBING, Ø3/8 BLACK, POLYOLEFIN	3M OR APPROVED EQUAL	28
				27
AR		WELD FILLER METAL (14)	ER308/308L ASME SFA5.9	26
				25
AR	FIT3503/32 CL063	HEAT SHRINK TUBING, Ø3/32 OD X .010 WALL	ALPHA WIRE	24
				23
				22
AR		WIRE, 25 GA (Ø.020)	300 SERIES SST	21
AR		SHIM STOCK, 31 GA (.010) THK	300 SERIES SST	20
AR			TUBING, Ø1/16 X .010 WALL 304/304L SST OR 316/316L SST ASTM A213	19
AR	NO. 1	NEOLUBE	HURON INDUSTRIES INCOPORATED	18
12	92196A110 OR 90152A116	SCREW, HEX SOCKET HEAD CAP #4-40 UNC-2A X 1/4 LG MIN	McMASTER-CARR	17
				16
				15
11	SS-100-6	UNION, 1/16 TUBING FITTINGS, SST	SWAGELOK COMPANY	14
3	MS27656T17F35S	RECEPTACLE, FLANGED WITH SOCKETS, 55 GOLD CONTACTS	ITT CANON OR APPROVED EQUAL	13
1	HD 25-TBD	HIGH DENSITY FEEDTHROUGH, TBD	CONAX TECH	12
5	HD 25-450 (12N) 48/48	HIGH DENSITY FEEDTHROUGH, 12 THERMOCOUPLES	CONAX TECH	11
				10
1	604660-1	CAPSULE STACKUP ASSY		9
1	604655-1	UPPER 5" PIPE		8
1	604657-1	CAPSULE TRANSITION ASSEMBLY		7
1	604656-1	LOCATOR TIE INTERFACE PIPE ASSEMBLY		6
1	604655-1	PIPE TRANSISTION ASSEMBLY		5
1	604653-1	AGR-5/6/7 TOP HEAD CLOSURE PLUG ASSEMBLY		4
				3
				2
	-1	TEST TRAIN ASSEMBLY		1

PARTS LIST

REVISIONS

REV	DESCRIPTION	EFFECTIVE DATE
3		
2		
1		
SHEET REV	REV STATUS OF SHEETS	

DIMENSIONING AND STYLE CONFORM TO ASME Y14.5M AND STD-15011
UNLESS OTHERWISE SPECIFIED SURFACE ROUGHNESS
DIMENSIONS AND TOLERANCES ARE IN INCHES
TOLERANCES: DECIMALS: .X ± .1, .XX ± .02, .XXX ± .010; FRACTIONS ± 1/8; ANGULAR ± 2°
DO NOT SCALE DRAWING

REQUESTER: J. PALMER
RESP ENGR: J. PALMER
DESIGN: J. PALMER
DRAWN: N. OLDHAM
PROJECT NO.:
SPCL CODE: AGR5/6/7
FOR REVIEW/APPROVAL SIGNATURES SEE ECR NO.
EFFECTIVE DATE:

Idaho National Laboratory
ATR
ADVANCED GAS REACTOR 5/6/7 (AGR-5/6/7)
TEST TRAIN
ASSEMBLY

SIZE D | CAGE CODE 01MF3 | DWG- 604652 | REV -
SCALE: NOTED | SHEET 1 OF 3
ATR0812

-1 | 604651 | NEXT ASSY | DASH NO. | APPLICATION

Shielding at Transition

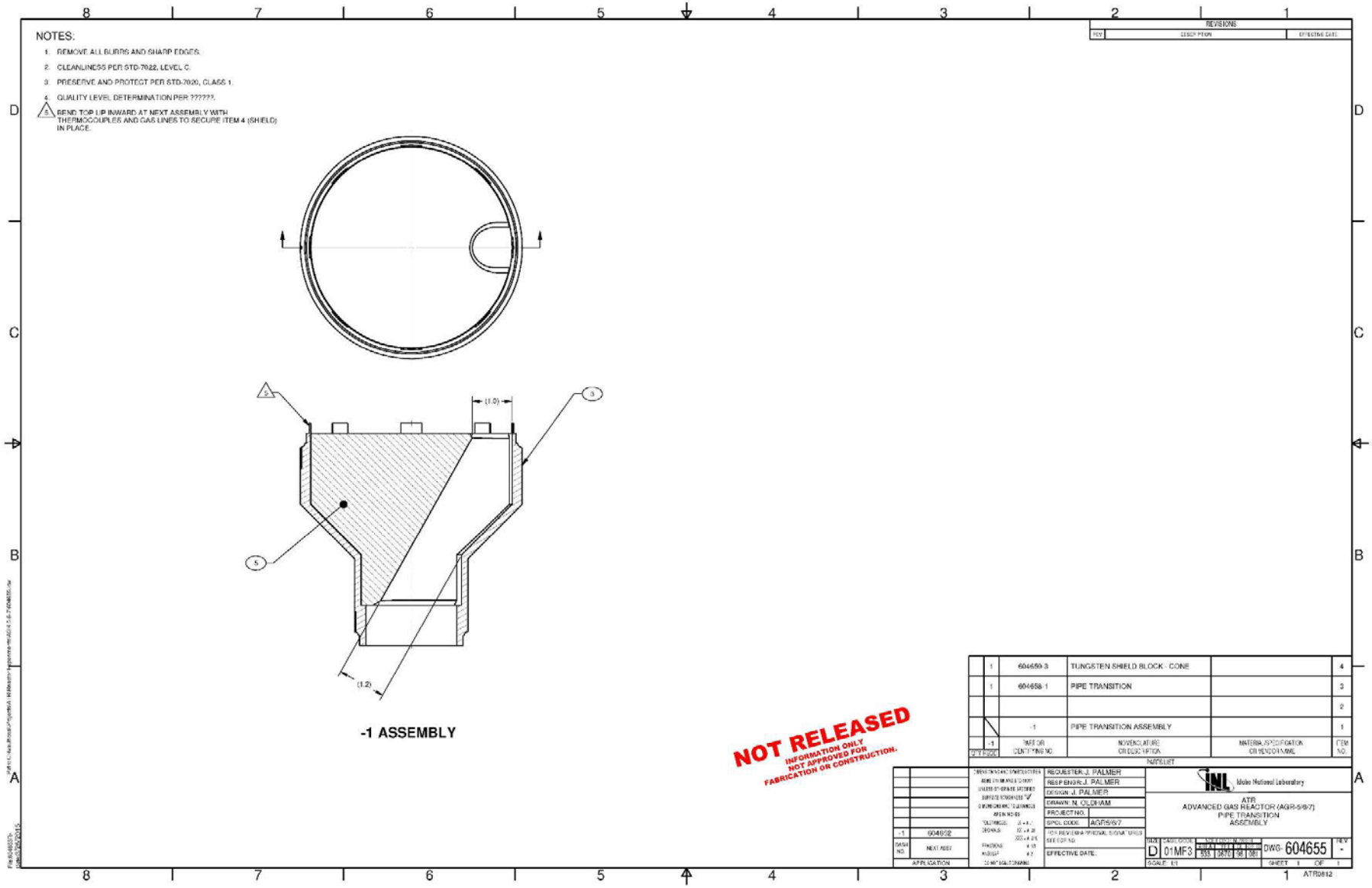

Shielding Above Core Section

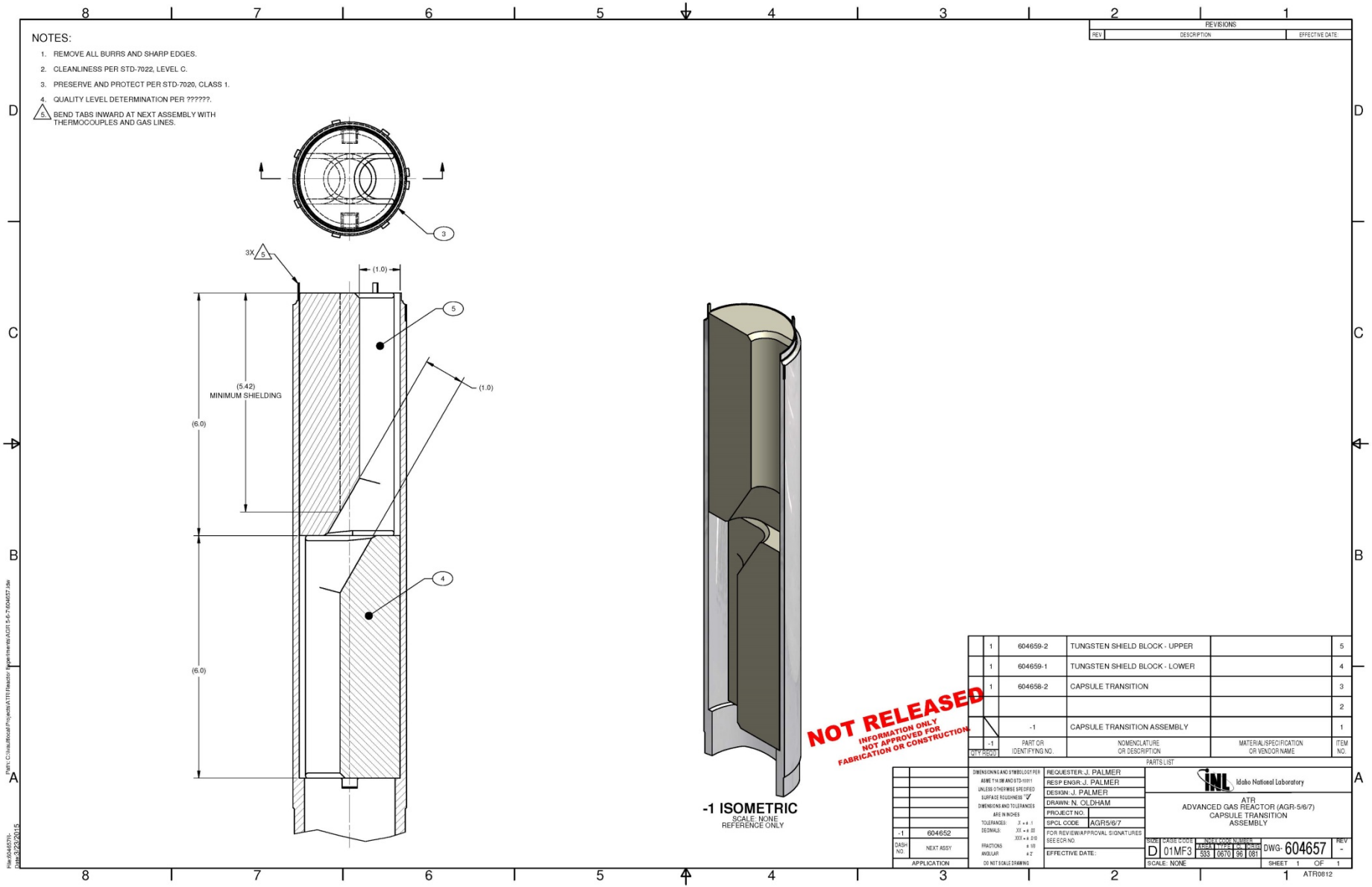

Core Section

NOTES:

1. REMOVE ALL BURRS AND SHARP EDGES.
2. CLEANLINESS PER STD-7022 LEVEL C.
3. ALL THERMOCOUPLE OR TUBING BEND RADII SHALL BE 6X THE OD OR GREATER. BEND AS REQUIRED FOR DESIRED PLACEMENT AND FIT. LUBRICATE CONTACT SURFACES WITH ITEM 10, (NEOLUBE), AS REQUIRED.
4. REMOVED.
5. STARTING WITH ITEM 4, (CAPSULE 1 ASSEMBLY), THREAD EACH THERMOCOUPLE WIRE AND GAS LINE THROUGH THE THRU TUBES IN THE NEXT SUCCEEDING CAPSULE UNTIL ALL WIRES AND GAS LINES HAVE GONE THROUGH TO THE LAST CAPSULE (ITEM 8), ASSEMBLY.
6. ASME B&PV CODE SECTION III, CLASS 3 MATERIAL.
7. PRIOR TO WELDING, ALIGN SET OF DOUBLE NUBS ON ALL CAPSULES AND BOTTOM HEMISPHERE WITHIN ±3°.
8. UNLESS OTHERWISE SPECIFIED, WELD PER INL WPS S2.0 OR S5.0 USING ITEM 12 (WELD FILLER METAL). THIS IS AN ASME B&PV CODE, SECTION III, CLASS 3 WELD.
9. UNLESS OTHERWISE SPECIFIED, VISUALLY INSPECT WELDS PER TPR-13442 WITH ACCEPTANCE CRITERIA PER APPENDIX B.
10. UNLESS OTHERWISE SPECIFIED, LIQUID PENETRANT INSPECT ALL WELDS PER INL TECHNICAL PROCEDURE TPR-13437 APPENDIX A OR B, WITH ACCEPTANCE CRITERIA PER APPENDIX J1 (WELDS).
11. WELDS ARE TO BE IDENTIFIED USING "W-X" TO INDICATE WELD NUMBER DESIGNATIONS ON THE WELD DATA SHEET.
12. CARE SHOULD BE TAKEN TO AVOID CONTAMINATING GRAPHITE COMPONENT DURING FABRICATION AND ASSEMBLY. WASH ALL TOOLS WITH ALCOHOL PRIOR TO USE, AND HANDLE GRAPHITE WITH CLEAN, WHITE, LINT FREE, COTTON GLOVES. DO NOT FABRICATE USING ANY CUTTING LUBRICANTS.
13. WEARING CLOTH OR NITRILE GLOVES, CLEAN GRAPHITE COMPONENTS AS FOLLOWS: REMOVE ALL DUST AND DEBRIS USING AN AEROSOL PRESSURIZED DUST-OFF PRODUCT. THEN, ULTRASONICALLY CLEAN IN DE-IONIZED WATER FOR 20 MINUTES. RINSE WITH ALCOHOL AND ALLOW TO AIR DRY. DRY COMPONENTS IN A LABORATORY OVEN AT 130°C IN AIR FOR 2 HOURS. ALL HANDLING AFTER CLEANING SHALL BE DONE USING CLEAN, DRY, LINT FREE, WHITE COTTON GLOVES.
14. PRESERVE AND PROTECT PER STD-7020, CLASS 1.
15. UNLESS OTHERWISE SPECIFIED, QUALITY LEVEL DETERMINATION PER QLD RTC-000485.
16. QUALITY LEVEL DETERMINATION PER QLD ATR COMP-000007.
17. BASED ON EXPERIENCE FROM ASSEMBLY OF THE AGC-1 EXPERIMENT WHICH USED INL WELD PROCEDURE SPECIFICATION S5.0 WITH SIMILAR THICKNESS MATERIAL, EACH WELD IS EXPECTED TO SHRINK AXIALLY APPROXIMATELY .035 INCH.

ABBREVIATIONS:

AW AFTER WELDING
BW BEFORE WELDING

REV STATUS OF SHEETS		
SHEET	1	2
REV	-	-

REVISIONS

REV	DESCRIPTION	EFFECTIVE DATE

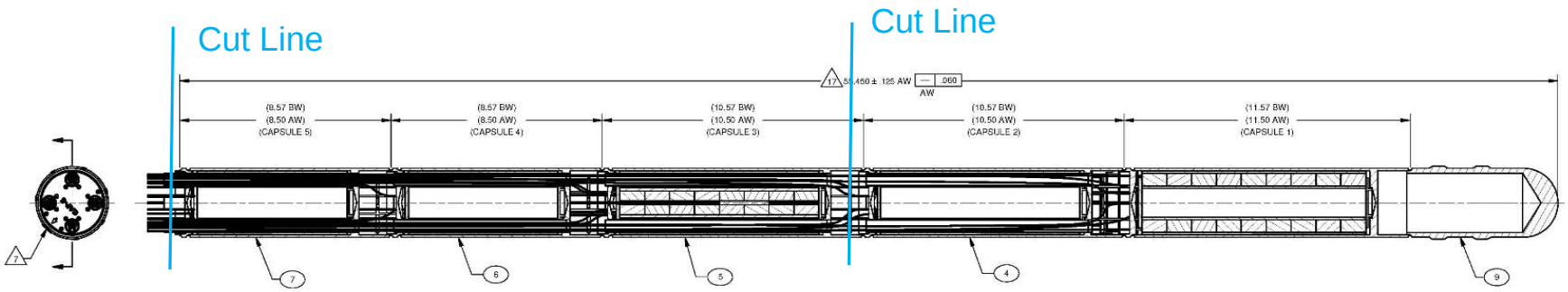

-1 ASSEMBLY (FOR WELDING INFORMATION, SEE SHEET 2)

NOT RELEASED
INFORMATION ONLY
NOT APPROVED FOR
FABRICATION OR CONSTRUCTION.

PARTS LIST

QTY REQD	PART OR IDENTIFYING NO.	NOMENCLATURE OR DESCRIPTION	MATERIAL/SPECIFICATION OR VENDOR NAME	ITEM NO.
1	604665-1	CAPSULE 5 ASSEMBLY		8
1	604664-1	CAPSULE 4 ASSEMBLY		7
1	604663-1	CAPSULE 3 ASSEMBLY		6
1	604662-1	CAPSULE 2 ASSEMBLY		5
1	604661-1	CAPSULE 1 ASSEMBLY		4
				3
				2
	-1	CAPSULE STACKUP ASSEMBLY		1

PARTS LIST CONTINUED

QTY REQD	PART OR IDENTIFYING NO.	NOMENCLATURE OR DESCRIPTION	MATERIAL/SPECIFICATION OR VENDOR NAME	ITEM NO.
AR		WELD FILLER METAL 6	ER308/308L ASME SFA 5.9	12
				11
AR	NO. 1	NEOLUBE 16	HURON INDUSTRIES INC.	10
1	604666-1	BOTTOM HEMISPHERE		9

DASH NO.	NEXT ASSY
-1	604652

APPLICATION

DIMENSIONS AND SPECIFICATIONS ASME STD AND STD PRACTICES UNLESS OTHERWISE SPECIFIED SURFACE ROUGHNESS "✓" DIMENSIONS ARE TO TERMINATE IN INCHES
TOLERANCES: .X = ± .; .XX = ± .; .XXX = ± .; DECIMALS
FRACTIONS ± 1/; ANGULAR ± 1°
DO NOT SCALE DRAWING

REQUESTER: D. SCHOONEN
RESP ENGR: J. PALMER
DESIGN: J. PALMER
DRAWN: N. OLDHAM
PROJECT NO.
SPCL. CODE: AGR5/6/7
FOR REVIEW/APPROVAL SIGNATURES SEE ECR NO.
EFFECTIVE DATE:

Idaho National Laboratory

ATR
ADVANCED GAS REACTOR (AGR-5/6/7)
CAPSULES 1 THRU 5
WELDMENT

SIZE D | CAGE CODE 01MF3 | DWG- 604660 | REV -
LAST CHANGE N. USED 5341 | FT 4 | 04-08 | 533 | 0670 | 96 | 081
SCALE: 1/2 | SHEET 1 OF 2

ATR0812

Self Powered Neutron Detectors

- Motivation for SPNDs
  - Provide real-time measurements of local neutron flux and local gamma flux
  - Data can be used in thermal analysis as independent check on heat rate data

- Weaknesses of SPNDs
  - May not last entire irradiation period
  - Provide a relative (not absolute) magnitude of gamma or neutron flux
  - Signal processing more difficult than thermocouples (nanoamps)

Supplementary Instrumentation Summary

Instrument and Purpose	Qty	Supplier	Location in Test	Status
Self Powered Neutron Detector (thermal flux)	4	Thermocoax	Slid down into the thru-tubes of capsules 2 – 5	Order placed - due any day
Micropocket Fission Detector (thermal flux)	1	Kansas State Univ & Troy Unruh	Slid down in a thru-tube of capsule 5	Due this calendar year
Ionization Chamber (gamma flux)	1	CEA	Slid down in a thru-tube of capsule 5	Due this calendar year
Ultrasonic Temperature Sensor	1	INL – Josh Daw	In graphite holder in capsule 5	Due this calendar year
Fiberoptic Temperature Sensor	1	CEA	In graphite holder in capsule 5	Due this calendar year

Questions?

Joe Palmer
Joe.palmer@inl.gov

Idaho National Laboratory
(208) 526-8700

Results 2014 TC Test – Loose Assembly with Hard-fired Alumina Insulation and Mo Sheath

Drift

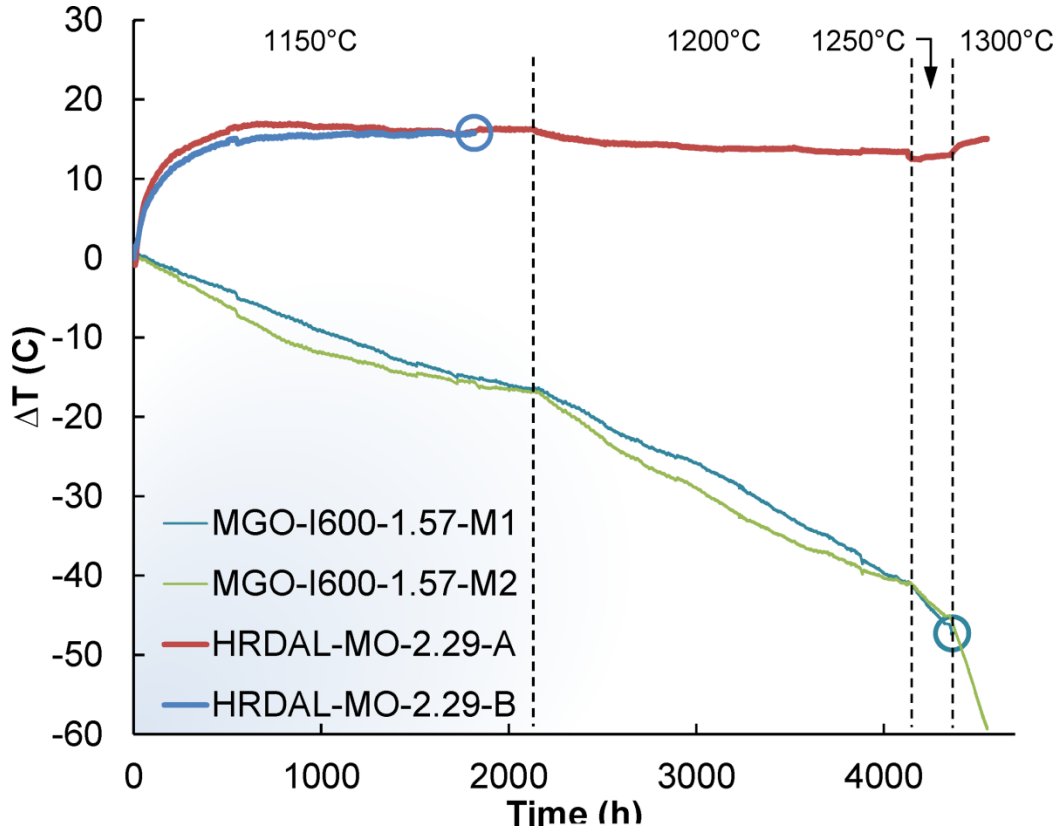

For the surviving TC virtually no drift after the initial transient

Two other TCs of this design were installed at about 3500 hrs. They lasted only 800 hrs.

Results 2014 TC Test – Loose Assembly with Hard-fired Alumina Insulation and Mo Sheath

Absolute temperature comparison

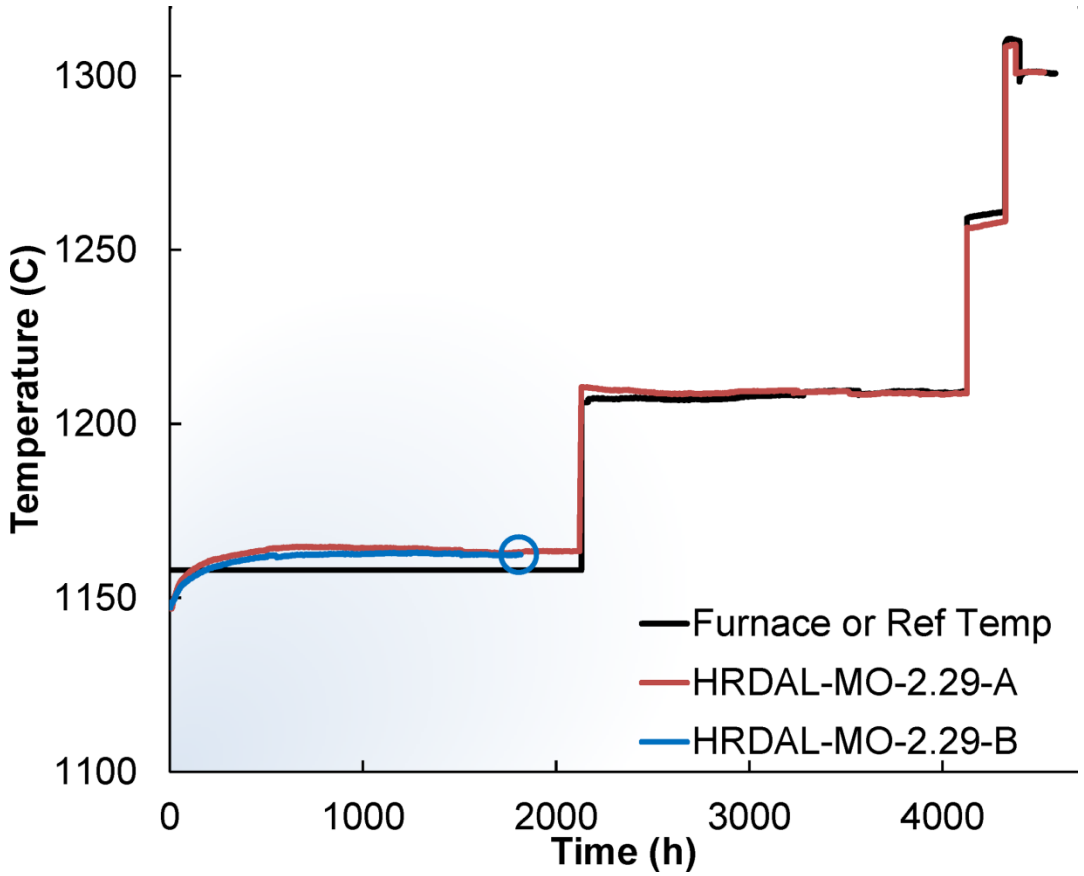

Loose Assembly Type N Design Details

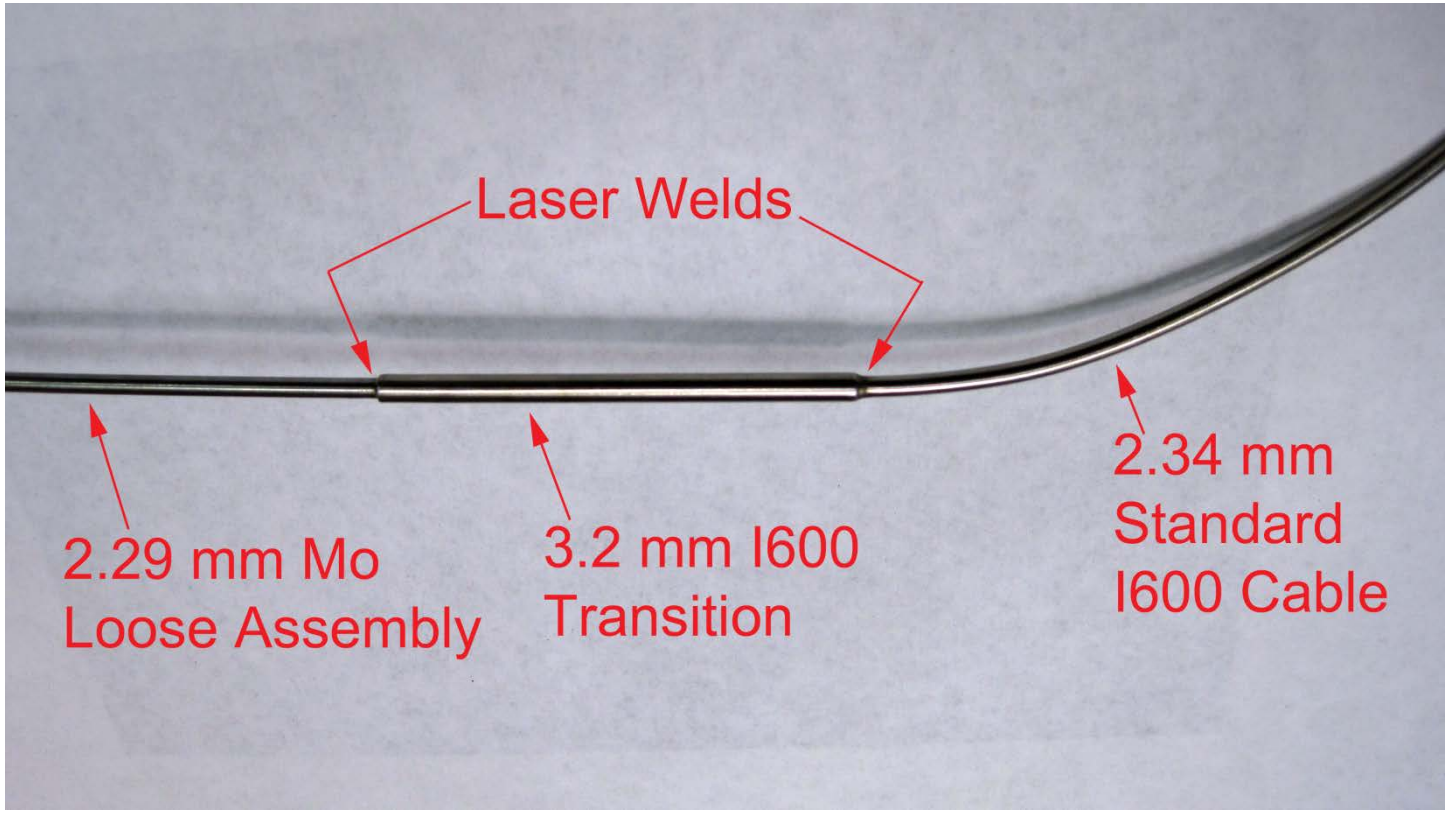
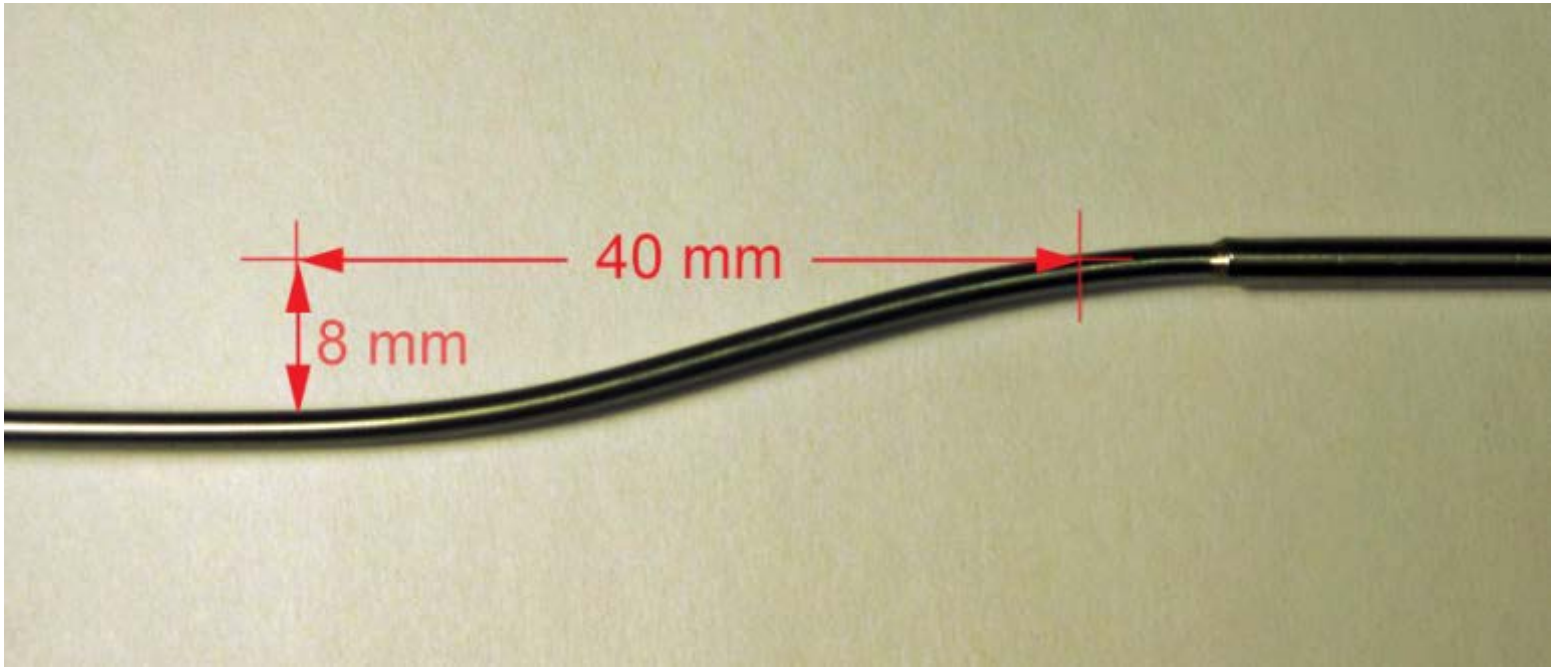
Loose Assembly Type N can be bent