INL Advanced Gas Reactor Fuels Program Review

AGR-3/4 Disassembly Readiness

Phil Winston

July 14-15, 2015

www.inl.gov

Idaho National Laboratory

AGR-3/4 Capsule

Standard

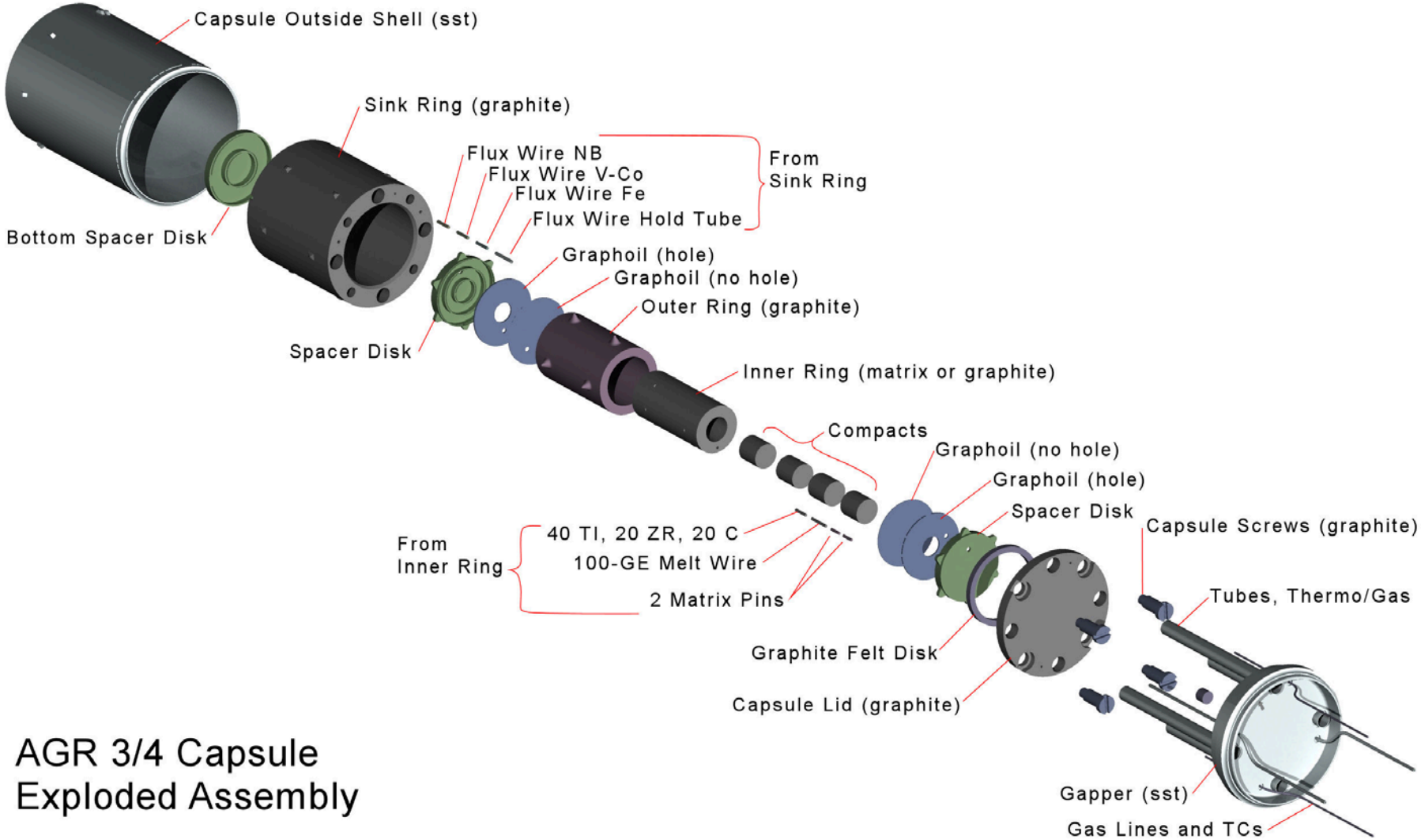

AGR 3/4 Capsule
Exploded Assembly

Nominal Process

- Section Test Train at ATR
- Ship Sections to HFEF
- Receive Section in Main Hot Cell
- Use Pipe Cutter to Separate Capsules and Part Capsule Top Weld
- Counterbore Through-Tubes to Free Capsule Top and Graphite Sink
- Remove Graphite Sink Top and Push Out Inner Components Sequentially into component-specific containers

Disassembly Objectives

- Separate Graphite Sink from Capsule, Open Graphite Sink
- Fuel Body Capsules: Push out Outer Ring Containing Inner Ring and Compacts and Send to FACS furnace for high temperature test
- Standard Capsules:
  - Open Outer Ring
  - Push out Inner Ring
  - Push out Compacts
  - Package Compacts for Precision Gamma Scanning (PGS)
  - Package Inner Sink for Precision Gamma Scanning
- Perform Metrology after PGS

Disassembly Table

- Main Rail and Substructure
- Pipe Cutter and Mount
- Lead-Screw Driven Clamping Carriages
- Multi-Attitude Drill Press
- Indexing Chuck
- Pushout and Catch Trays
- Component-specific containers

Disassembly Table

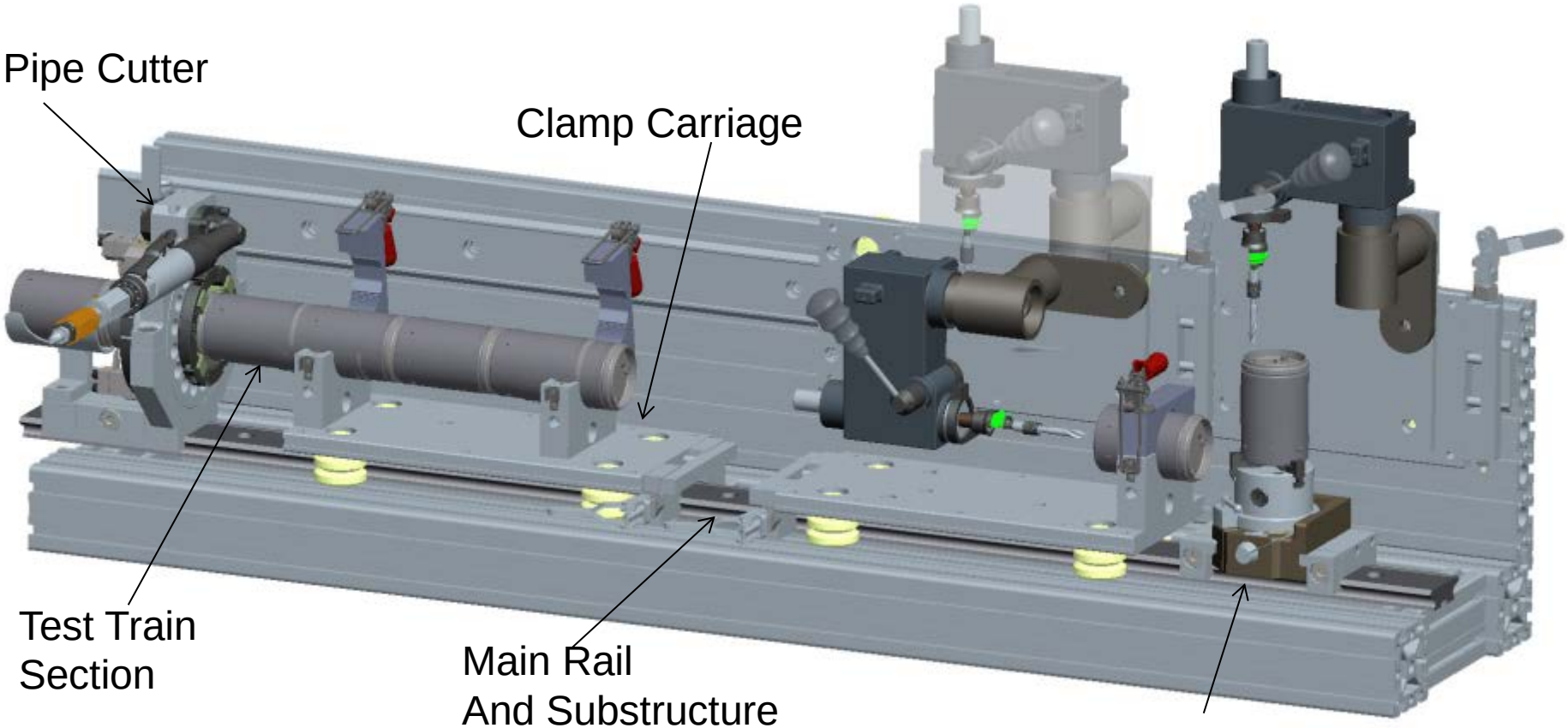

Primary Disassembly Table

- Pipe Cutter
- Drill Press
- Indexing Chuck
- Carriage

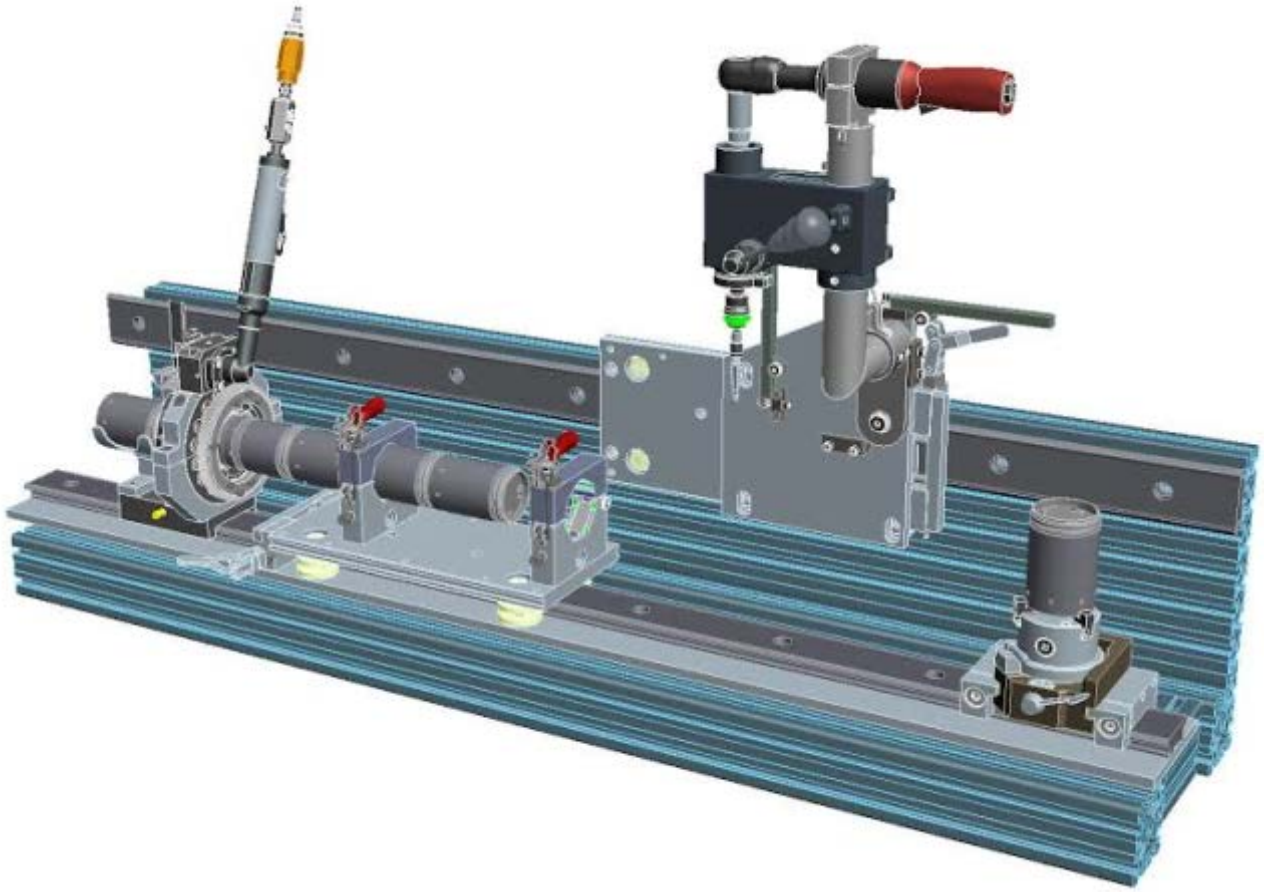

Primary Disassembly Table

- Pipe Cutter on Rail

Capsule Disassembly

- Cutting Top Weld

Capsule Disassembly

- After Cutting Bottom Weld

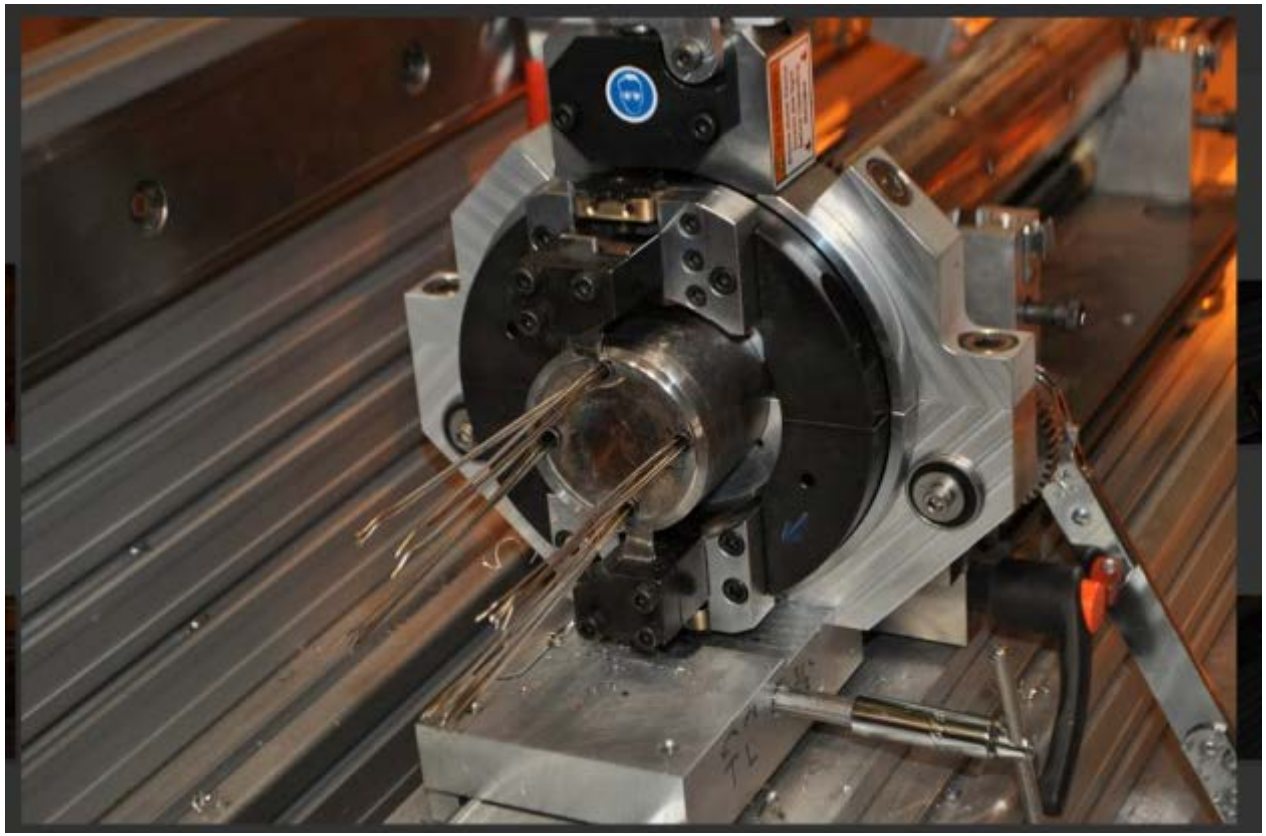

Capsule Disassembly

- Drilling out Through-tube Penetrations

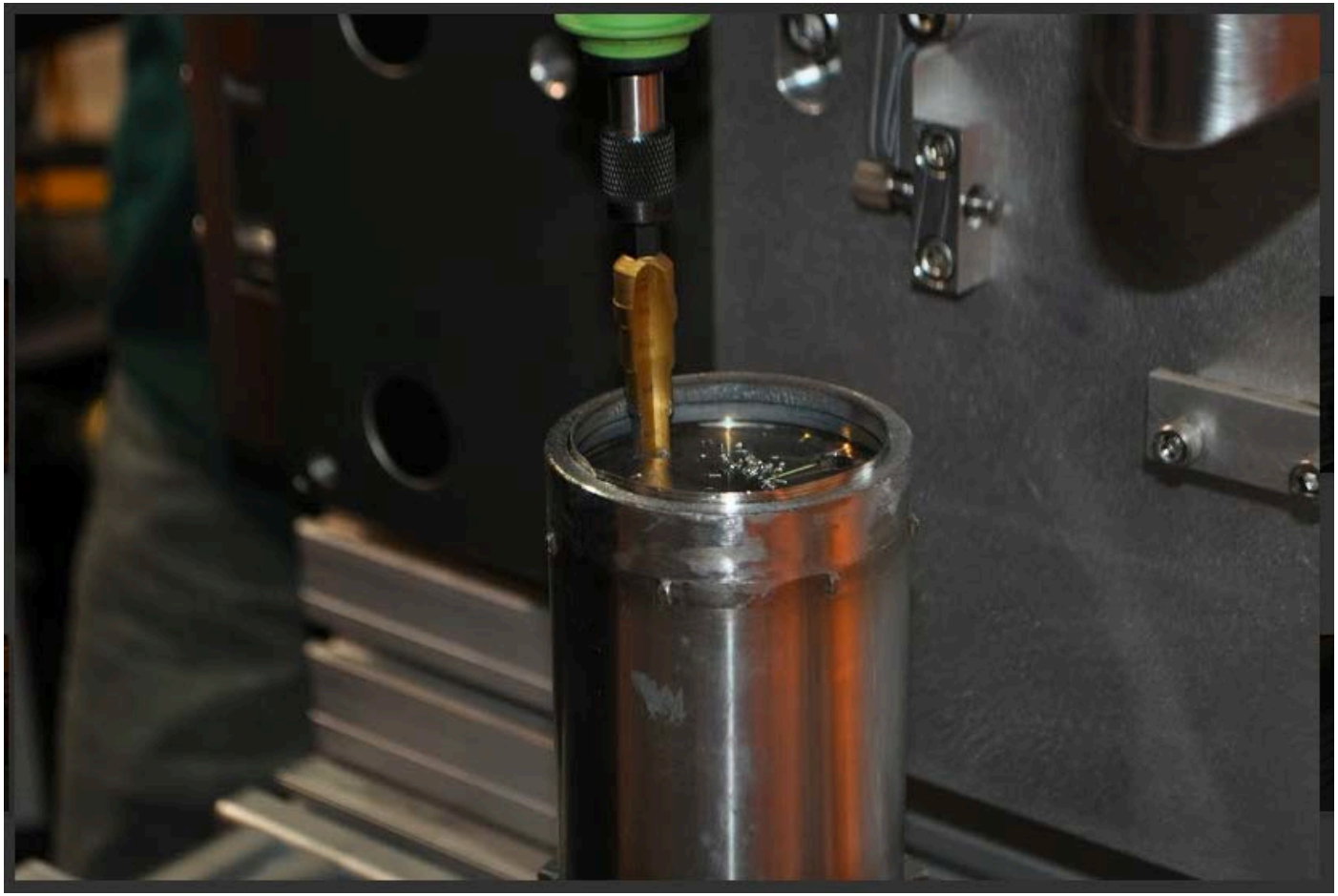

Capsule Disassembly

- Separating Top

Component Sorting Table

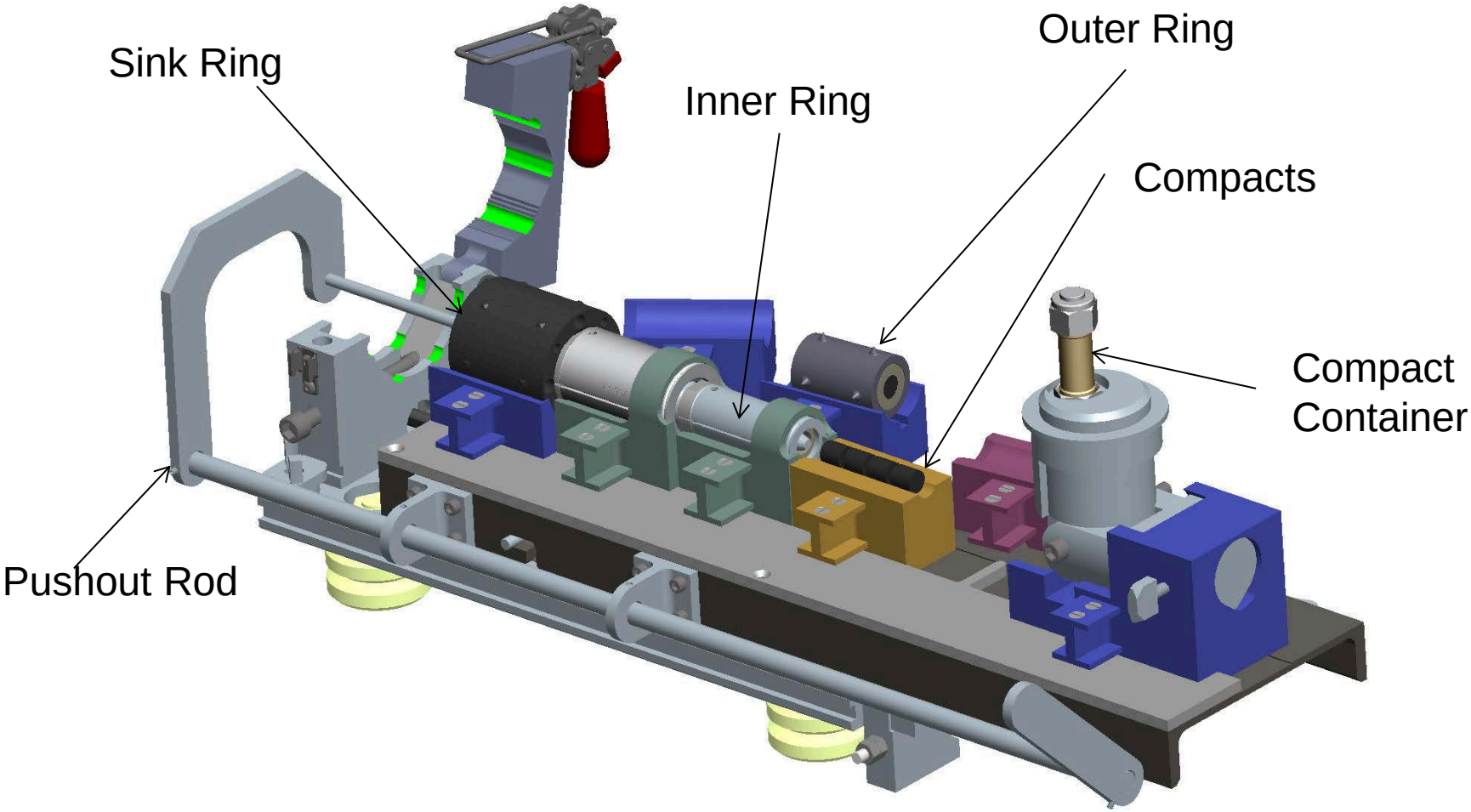

Pushout Sorting Container Table

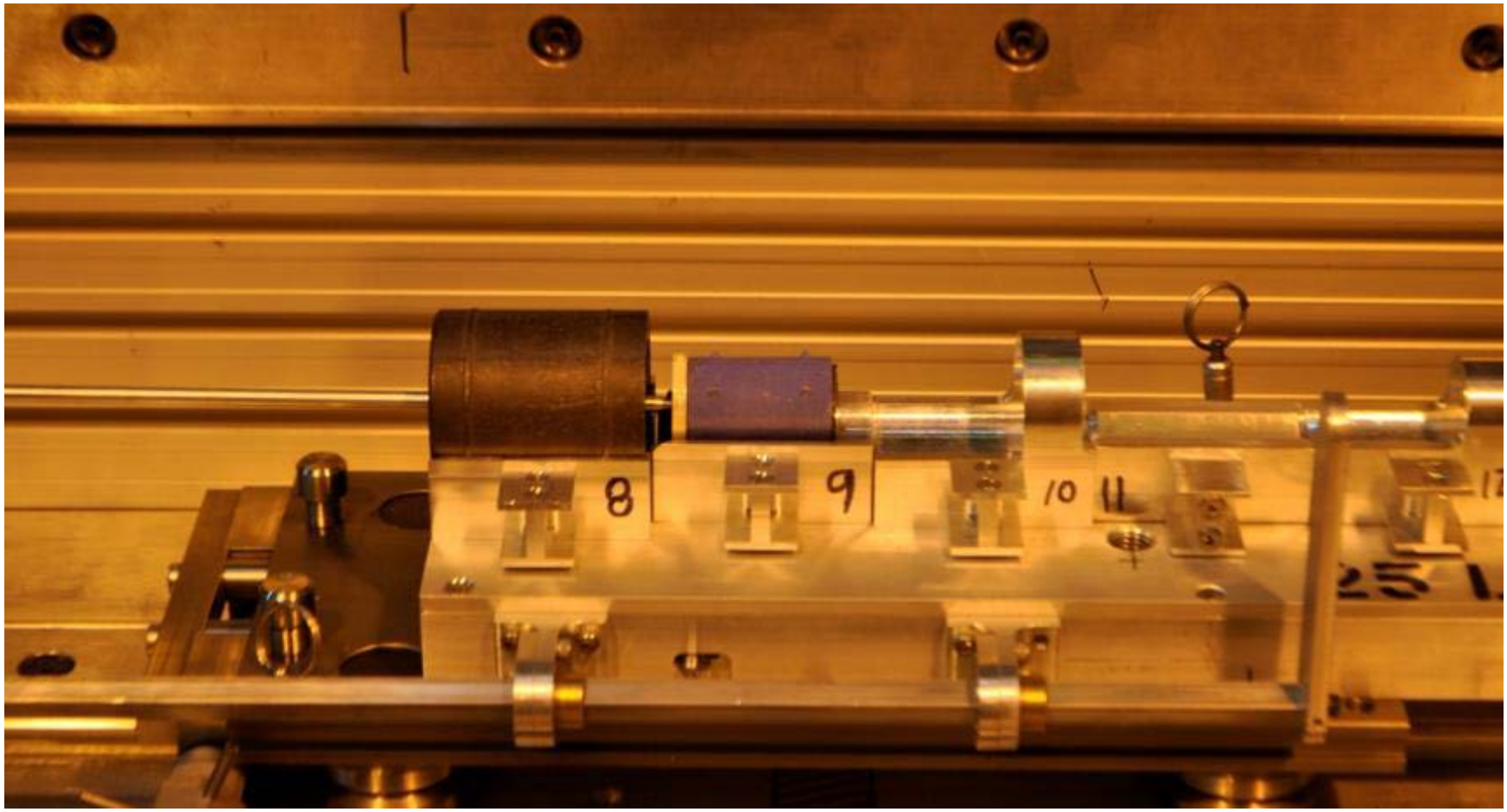

Outer Ring Void Filler

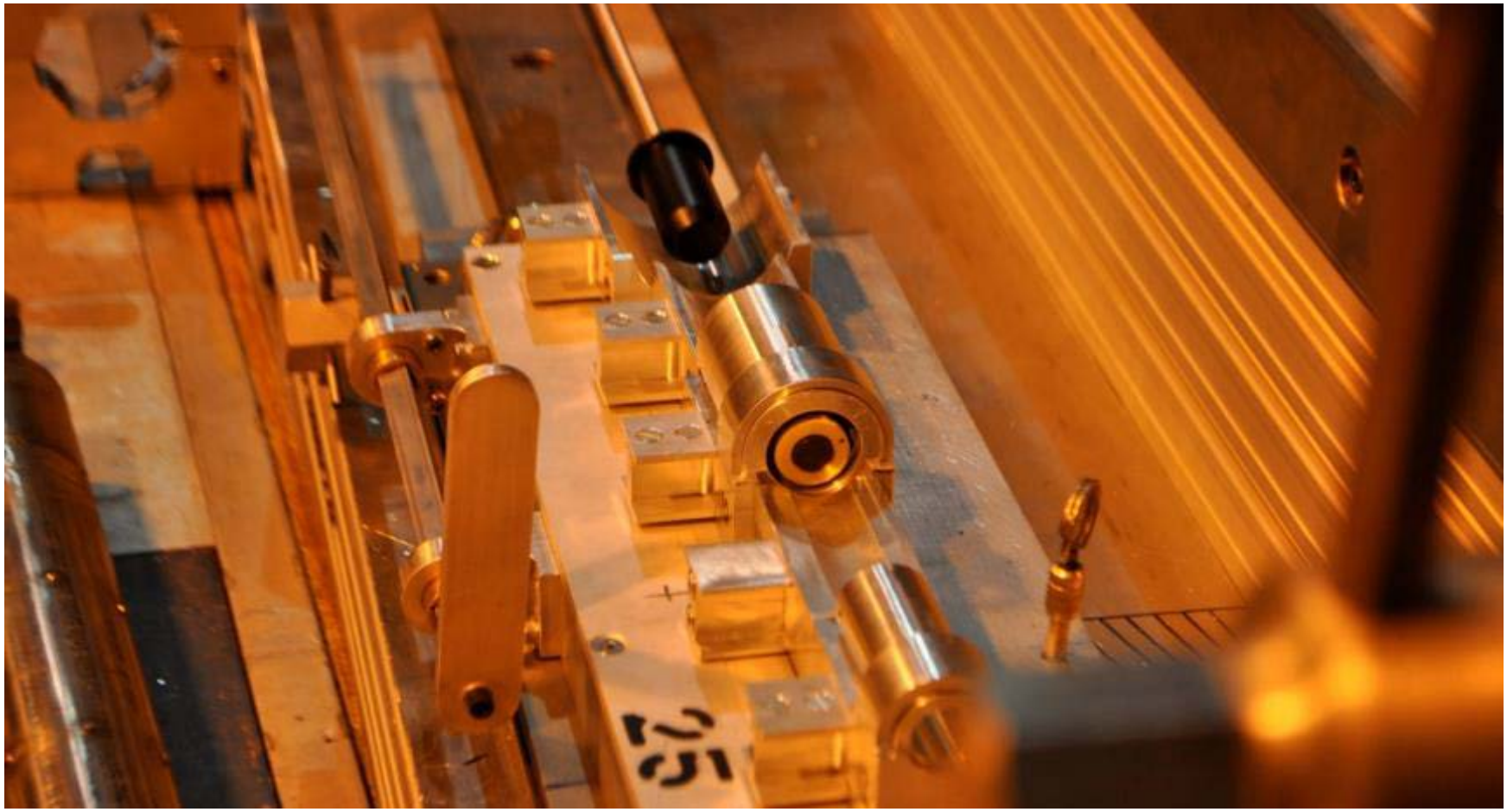

Conclusion

- Phase I, II, and III Qualification Plans have been completed
- Drawings have been redlined for Mockup Mods
- Miscellaneous tools included in the final drawings
- Containers fabricated and tested
- Procedure completed

Questions?

Phil Winston
Phil.Winston@inl.gov

Idaho National Laboratory
(208) 526-3679