Advanced Gas Reactor Fuels Program Review

AGR−3/4 Metrology Results

F. Rice, J. Stempien PhD., C. Christensen, S. Ploger

June 8-9, 2016

www.inl.gov

Idaho National Laboratory

Acknowledgements

- Mechanical Design Engineers:
  - Jim Weist, Chad Quirl
- HFEF Operators:
  - Jake Maupin, Nicholas Ingle

Outline

- Experiment Background
- Metrology Equipment
- Metrology Protocol
- Results
- Conclusions
- Future Work

Experiment Background: AGR-3/4 Experiment Objectives

- Observe metallic fission product transport (Ag, Cs, Eu, Sr) within graphitic matrix and nuclear grade graphites (IG-110 and PCEA)
- Measure diffusion coefficients of metallic fission products within these materials

Experiment Background: AGR-3/4 Compacts

- Each compact is 0.5 in. tall
- Approximately 1872 “driver” TRISO particles similar to AGR-1 Baseline fuel
- 20 designed-to-fail (DTF) particles coated only with 20µm pyrocarbon layer
- DTF provide known source of fission products

X-ray showing DTF particles in center of compact

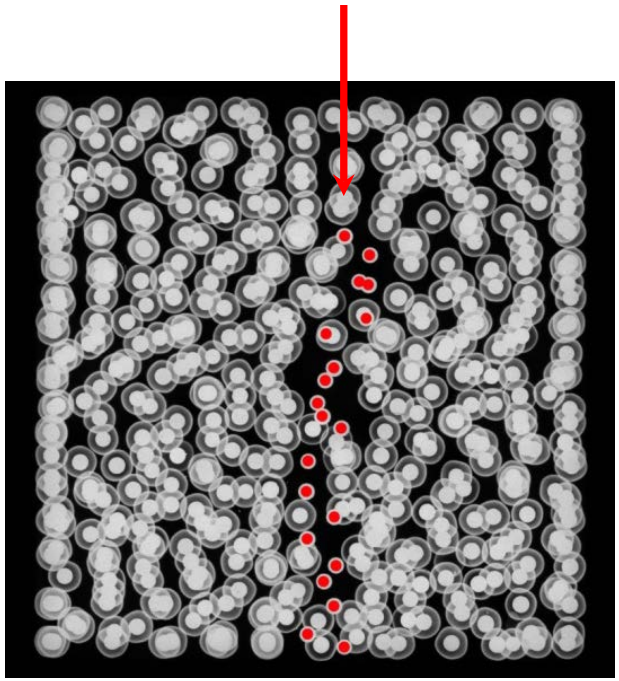

Experiment Background: AGR-3/4 Irradiation Capsule

- Four compacts in center of “inner ring” (graphitic matrix, IG-110, or PCEA)
- Inner ring sits within “outer ring” (PCEA or IG-110)
- Outer ring held within cold “sink ring” (PCEA)
- Fission products may transport through components
- FP inventory and distribution in components measured in PIE

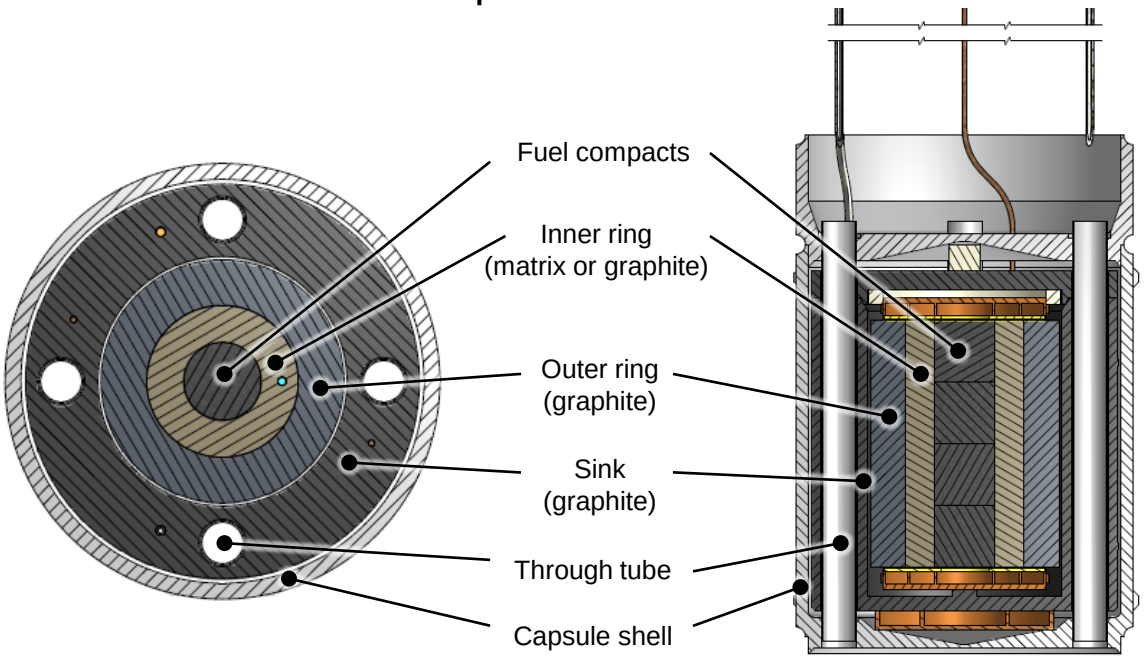

Metrology Equipment: Outer Diameters and Length for Compacts and Outer Diameters for Rings

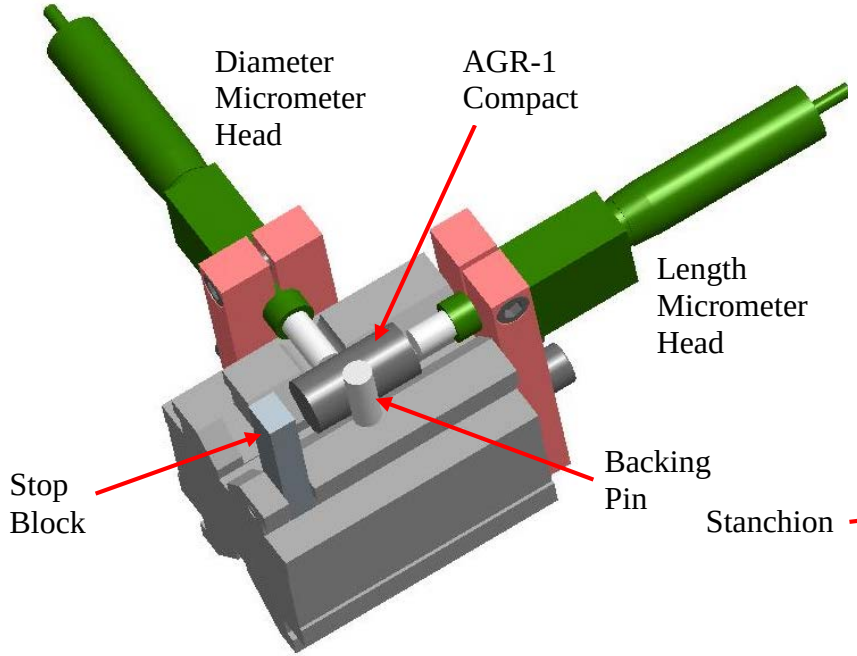

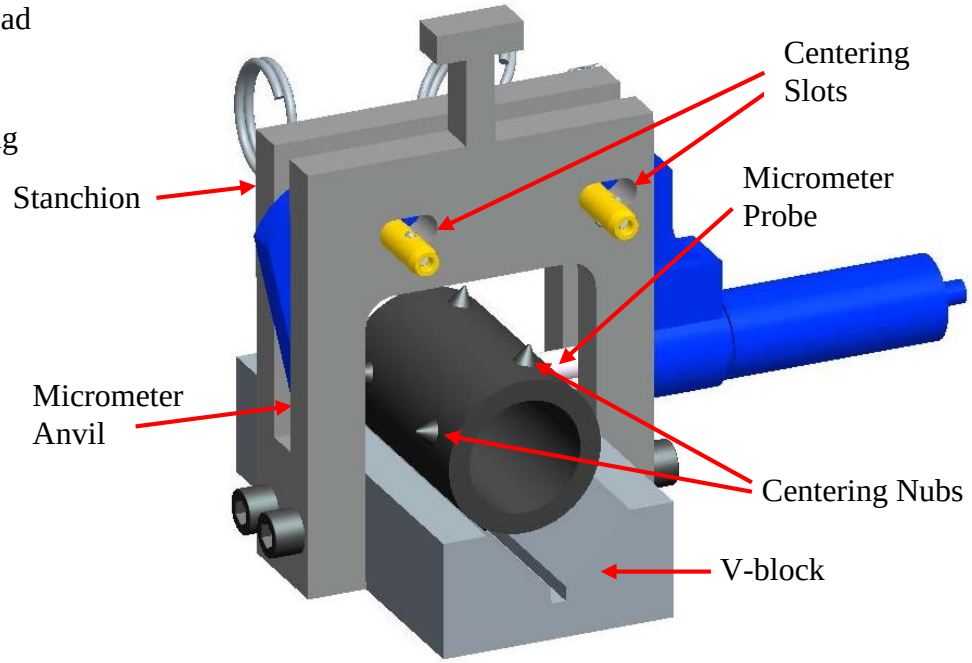

Metrology Equipment: Inner Diameters for Rings

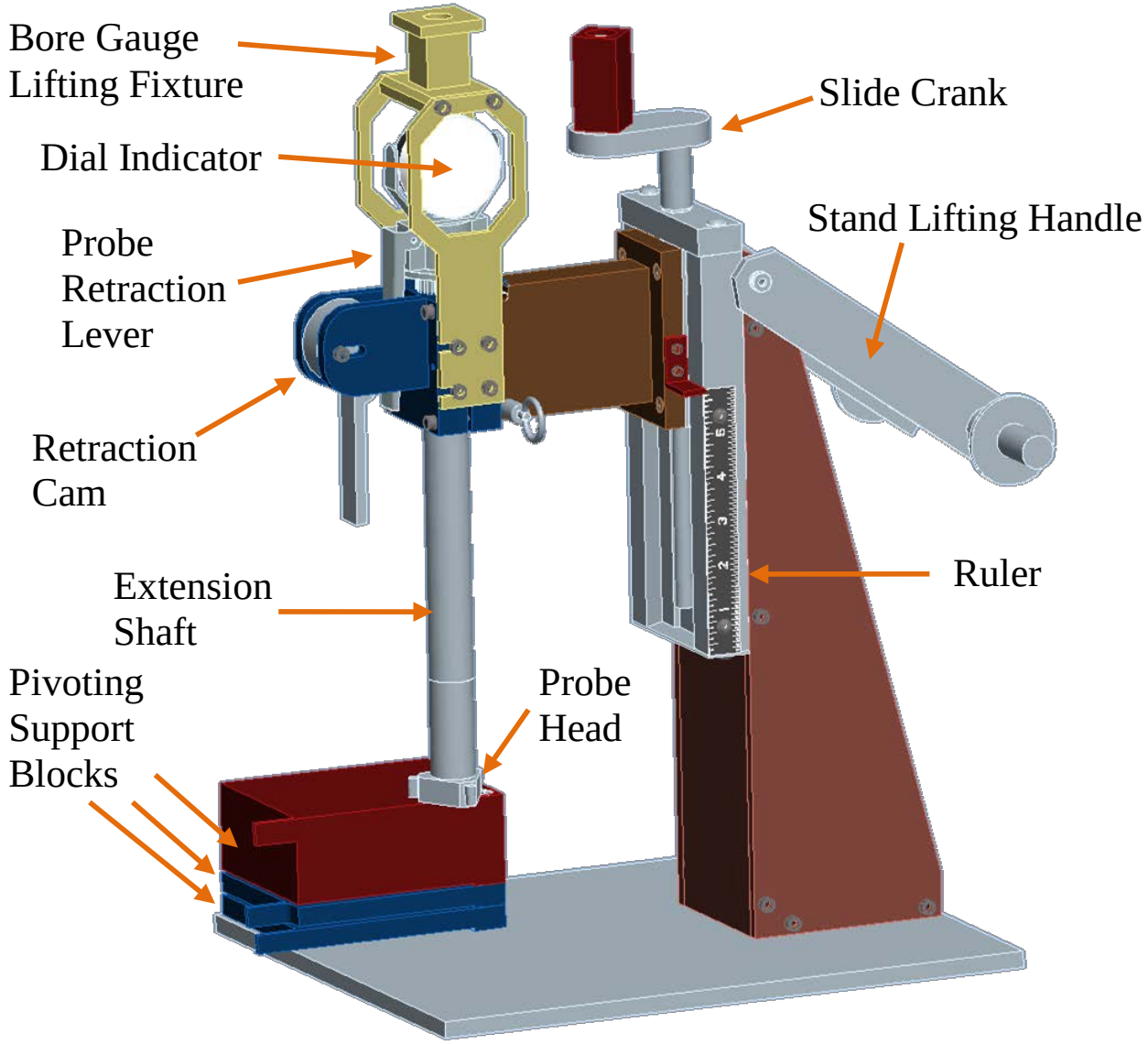

Metrology Protocol: Per HFEF-LI-0072

- Prior to measuring each experiment component a measurement check for drift and equipment function was performed using the reference standards.
- Axial measurement locations on rings were selected based on each compact axial centers.
- Nub positioning required some of these to be off-set from the axial compact centers.

Metrology Protocol: Compact Measurement Locations

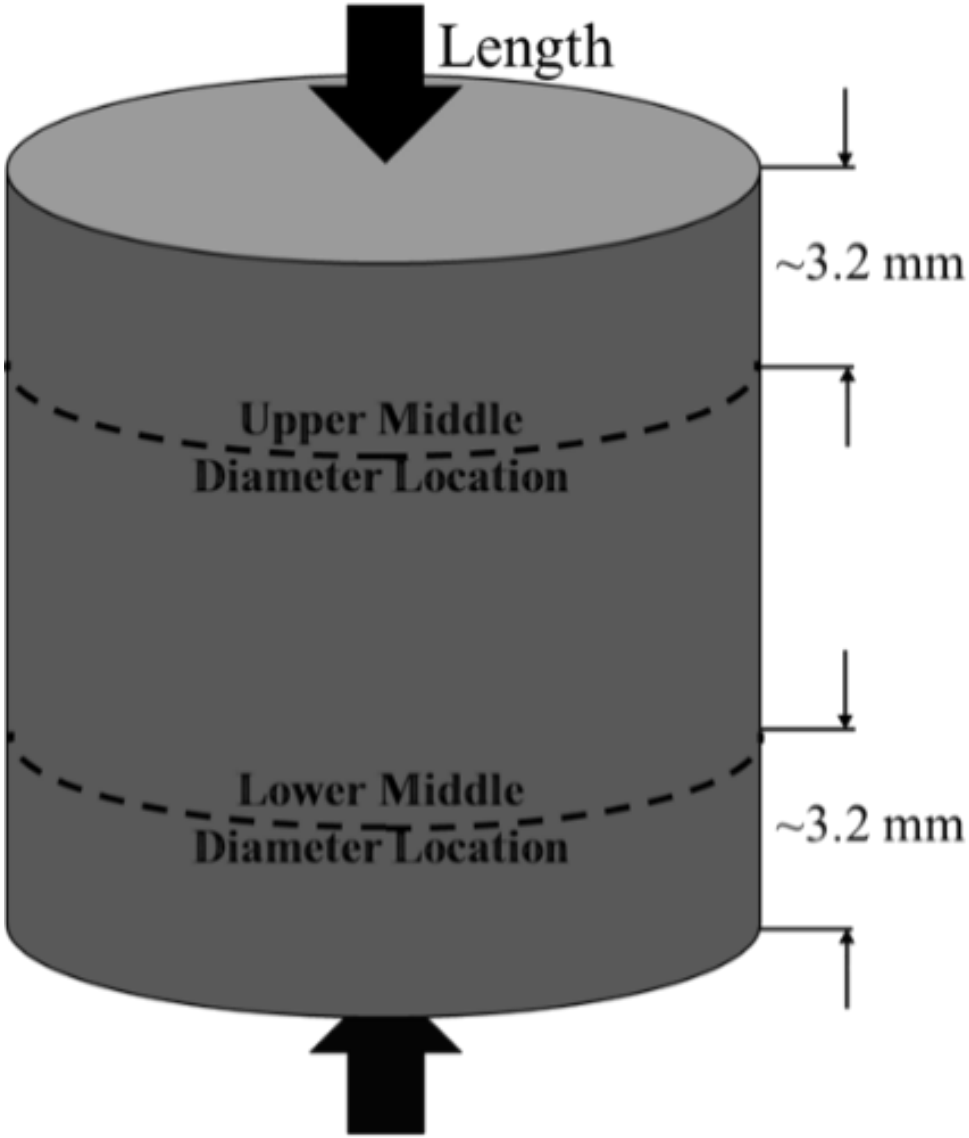

Metrology Protocol: Ring Measurement Locations

Inner Diameter:

- Axial Position 1
- Axial Position 2
- Axial Position 3
- Axial Position 4

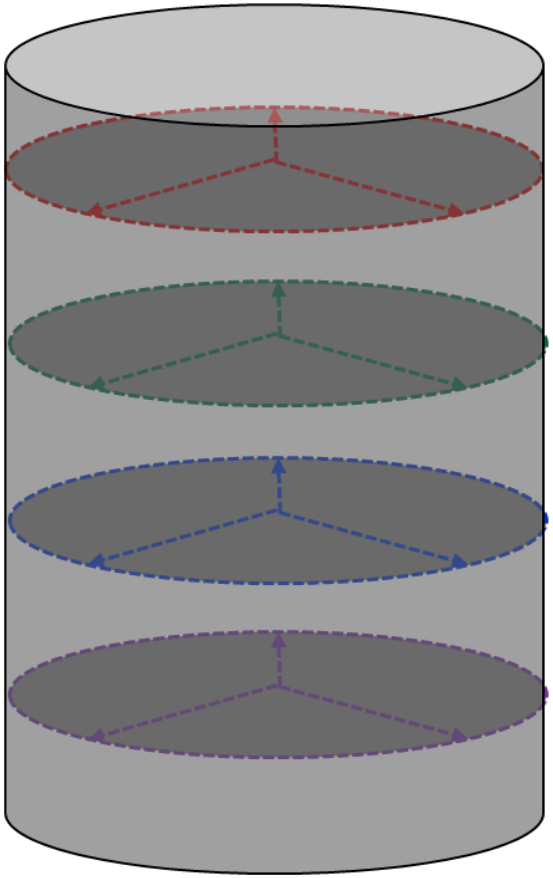

Outer Diameter:

- Axial Position 1
- Axial Position 2
- Axial Position 3
- Axial Position 4
- Azimuthal Position 1
- Azimuthal Position 2
- Azimuthal Position 3
- Azimuthal Position 4

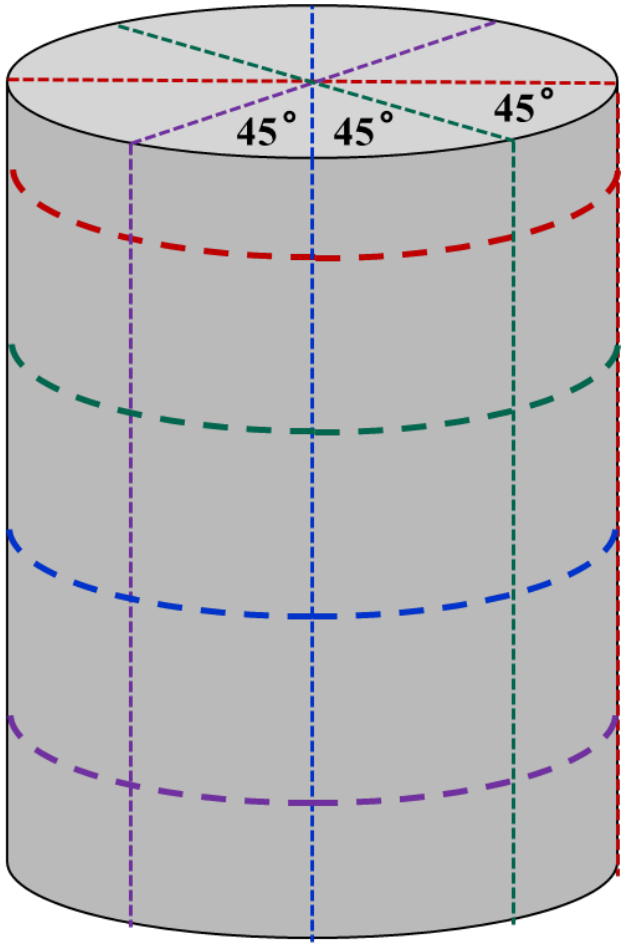

Metrology Protocol: Metrology Guide

- Only capsules 1, 3, 4, 5, 7, 8, 10 and 12 were fully dissembled and components measured.
- Compact #4 from ***capsule #3*** was chipped and not all measurements could be completed.
- Compact #1 from ***capsule #5*** was very damaged during a difficult removal and no measurements were possible.
- Capsules 2, 6, 9 and 11 (fuel bodies) had the sink ring removed and measured. The remaining components were left in the assembled state and reserved for other characterization and testing.

Results: Average Compact Diameter Change With Uncertainties

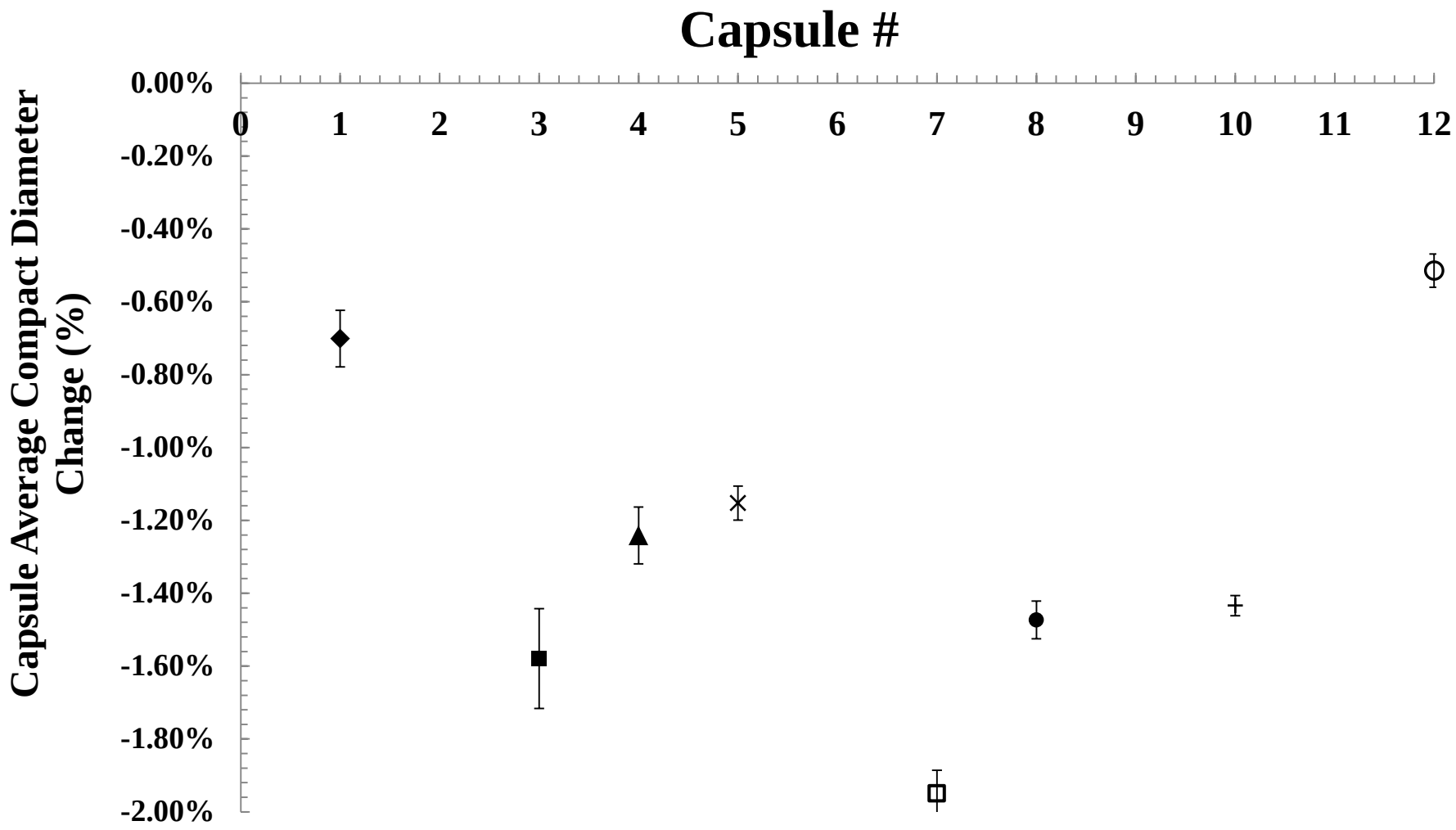

Results: Compact Diameter Change Relative to Temperature˚C

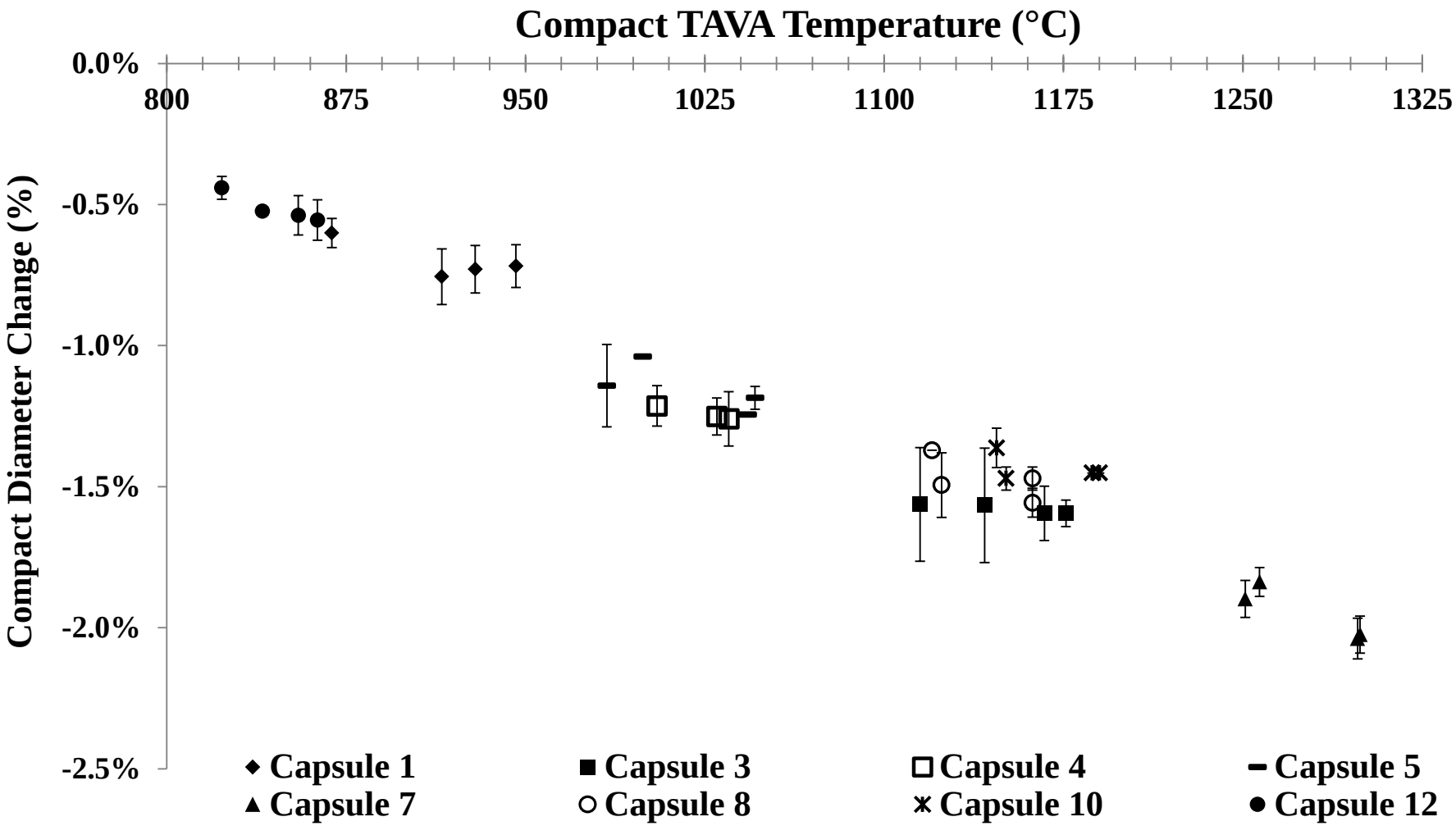

Results: Compact Length Change Relative to Temperature˚C

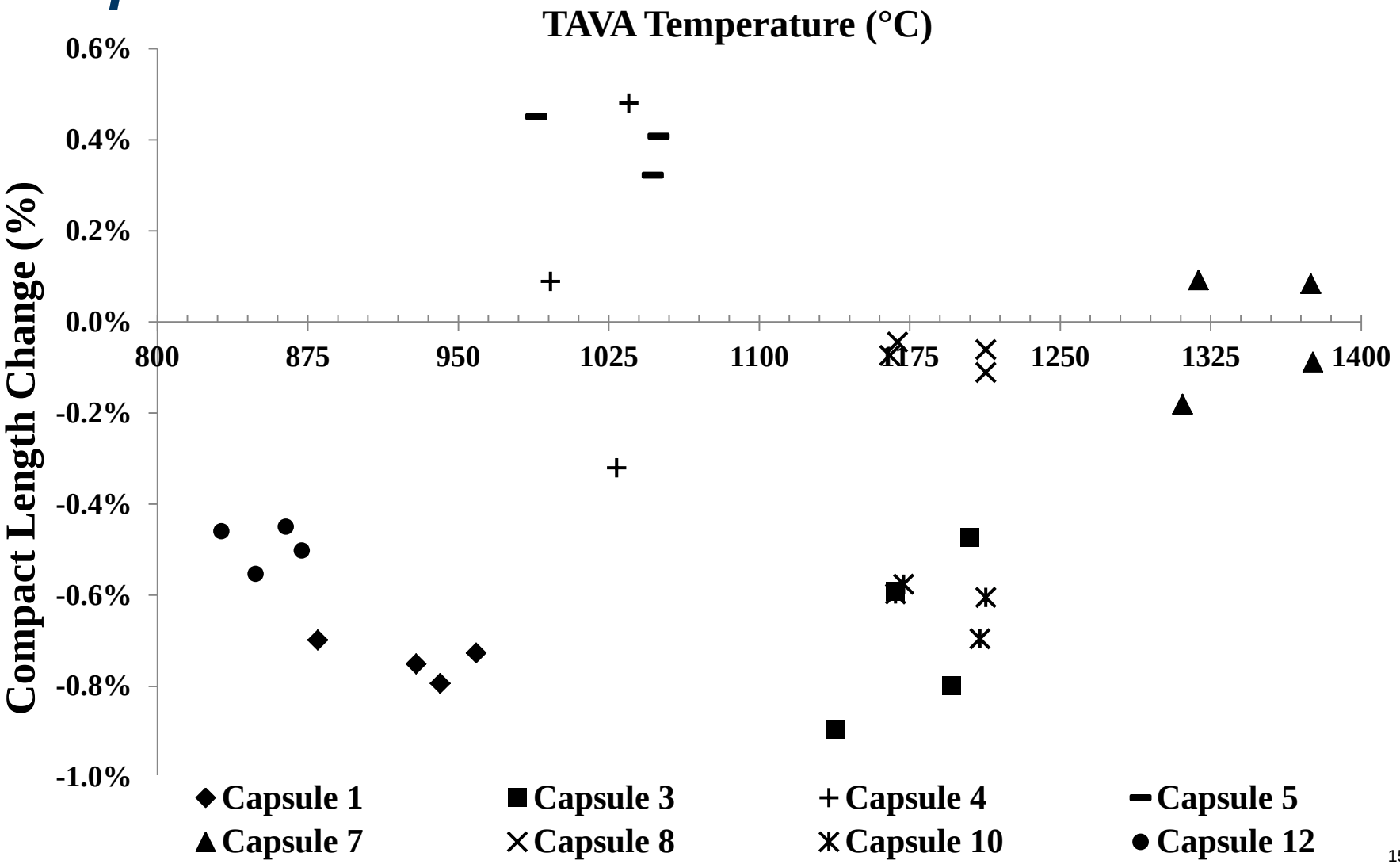

Results: Compact Diameter Change Relative to Fluence (1×10^{25} n/m^2)

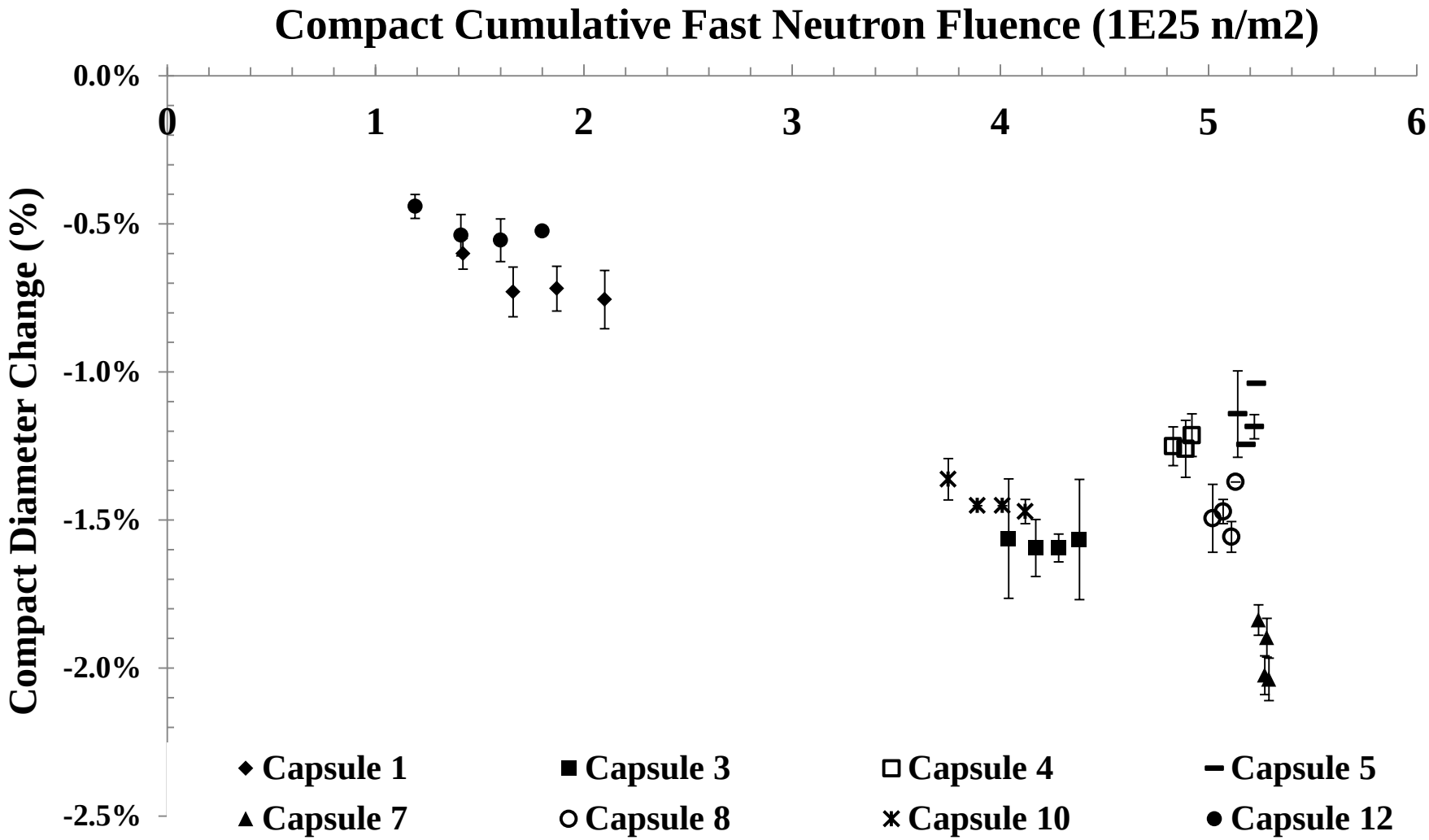

Results: Compact Length Change Relative to Fluence (1×10^{25} n/m^2)

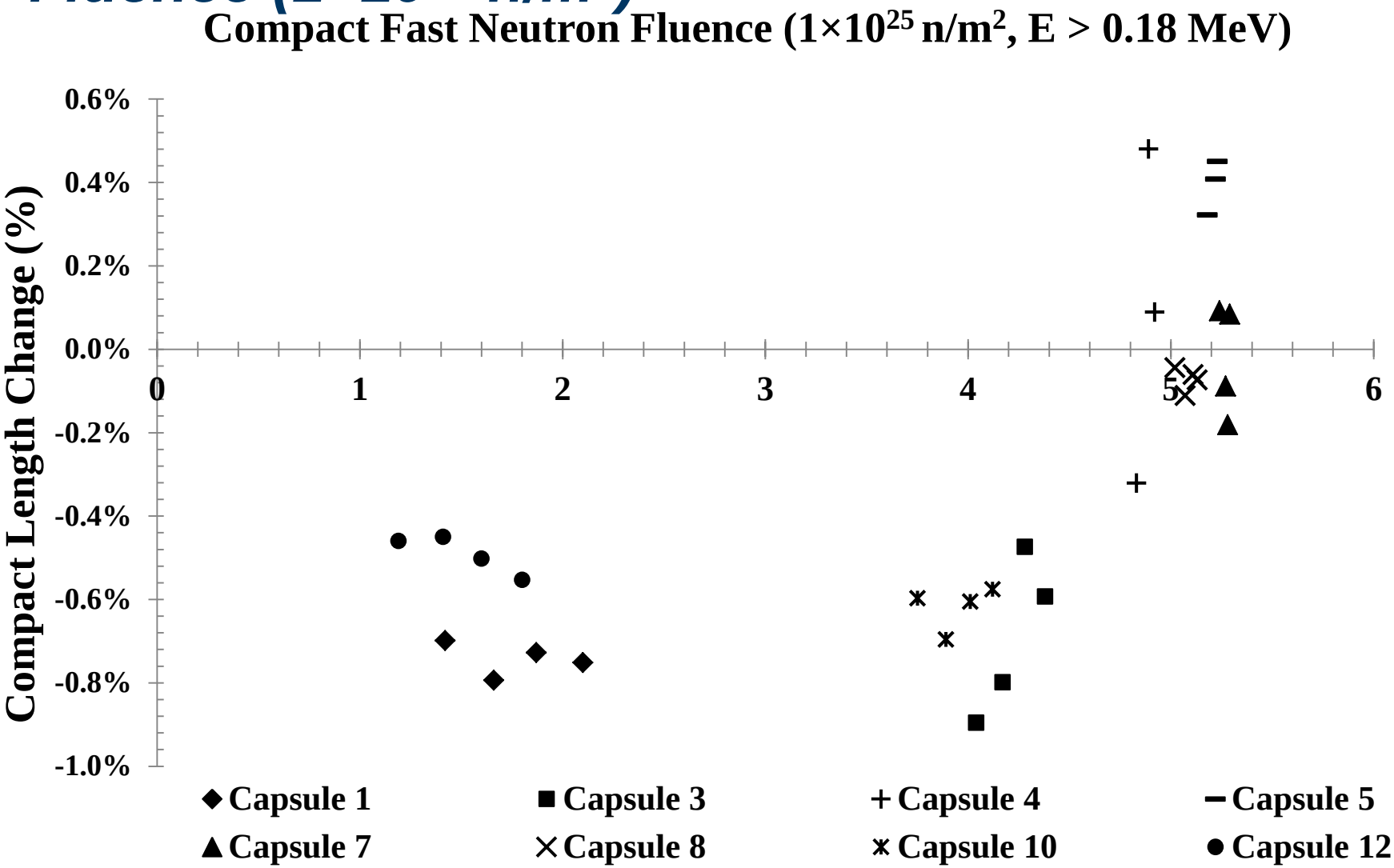

Results: Inner Ring ID and OD Change With Uncertainty Bars

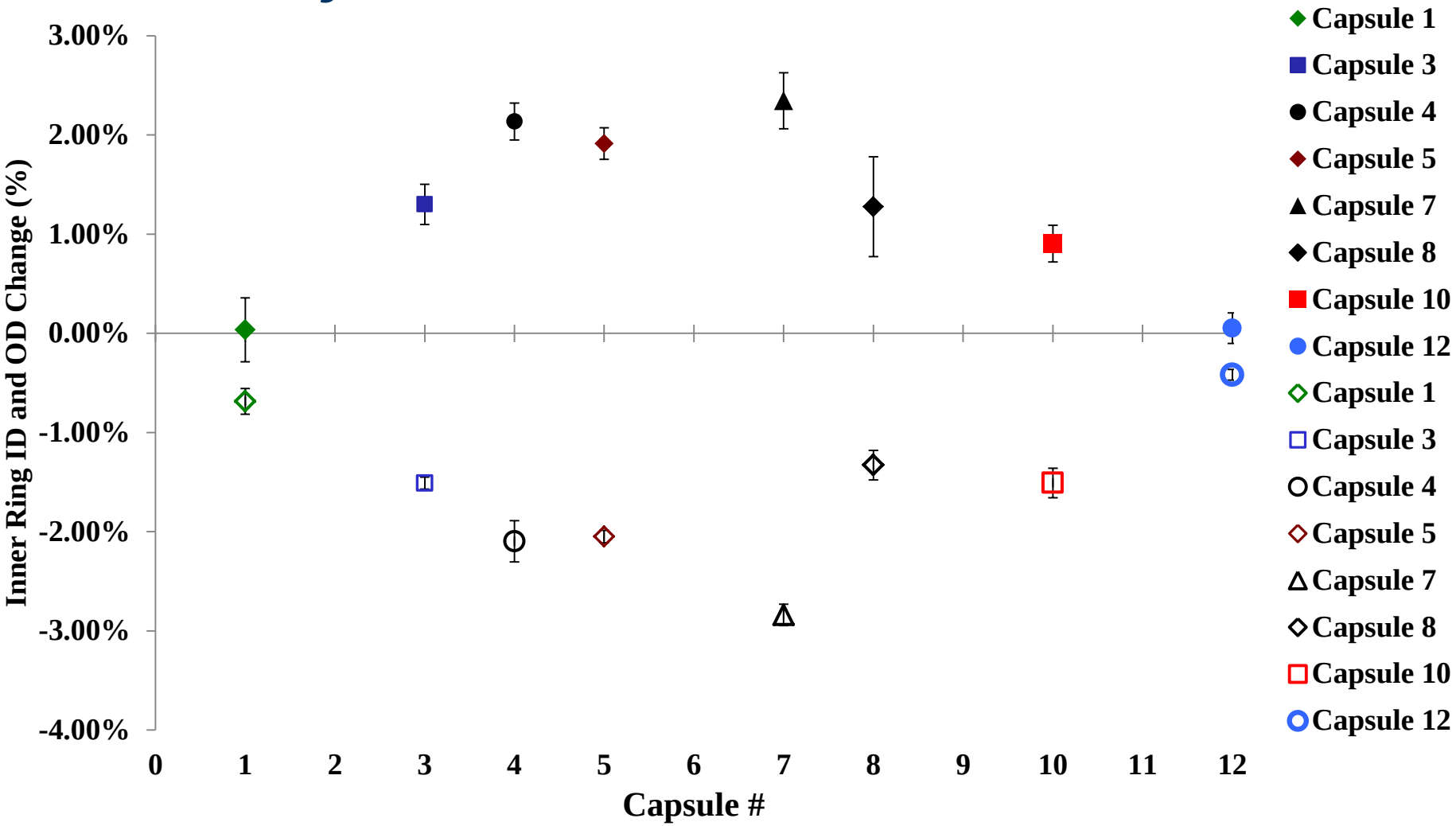

ID: Closed points, OD: Open points

Results: Inner Ring ID and OD Change Relative to Fluence (1×10^{25} n/m^2)

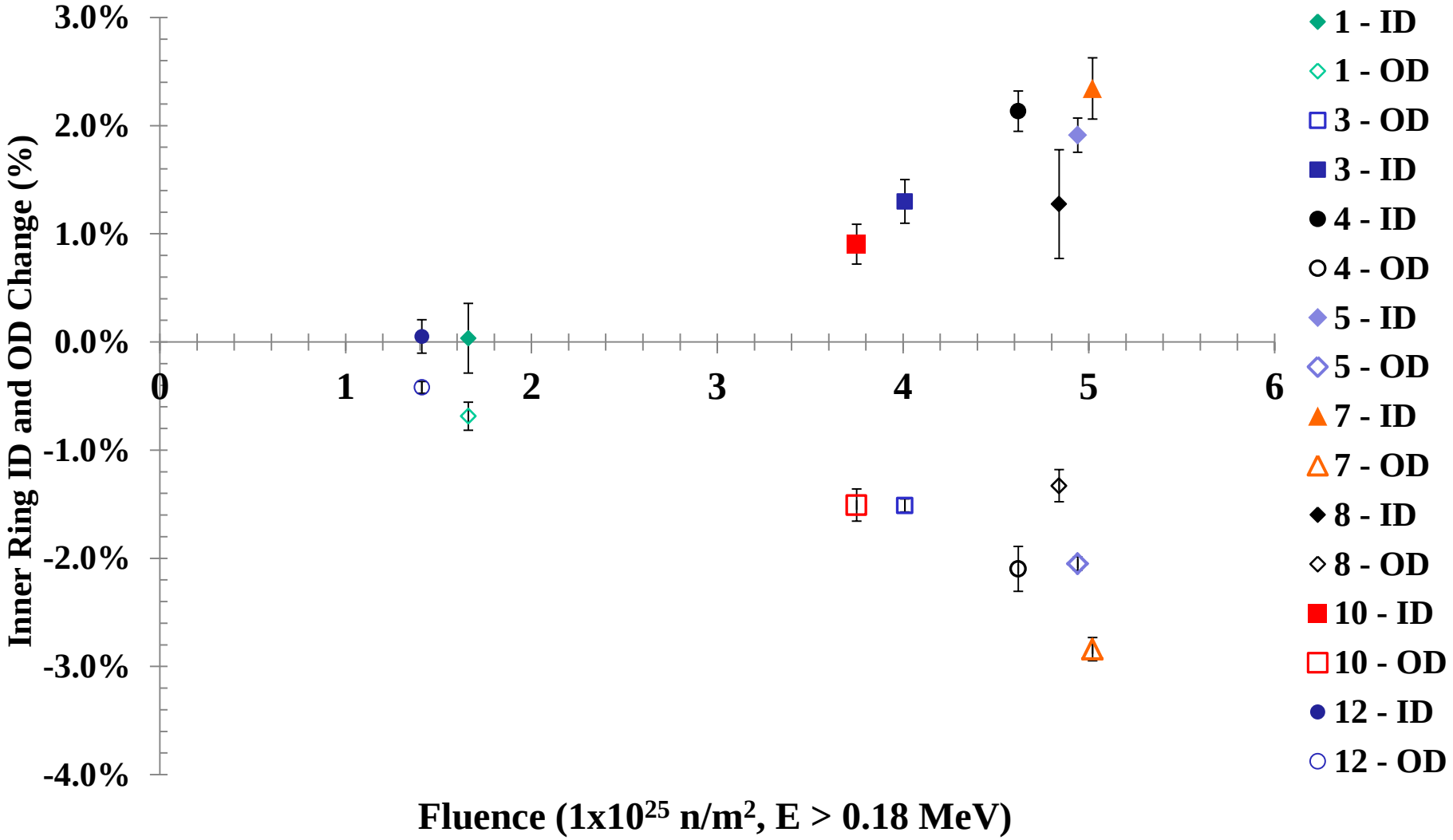

Results: Outer Ring ID and OD Change With Uncertainty Bars

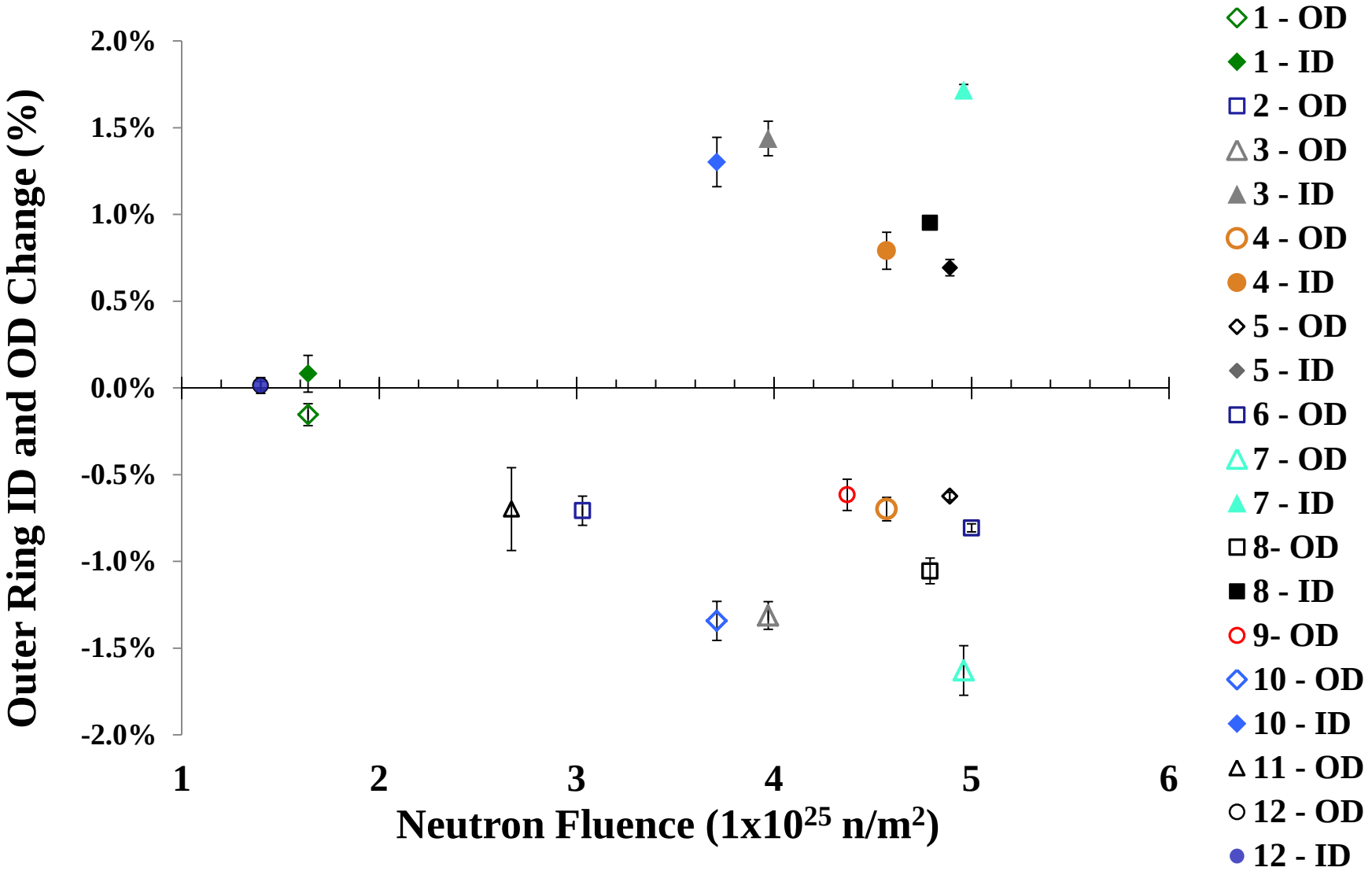

Results: Outer Ring ID and OD by Capsule

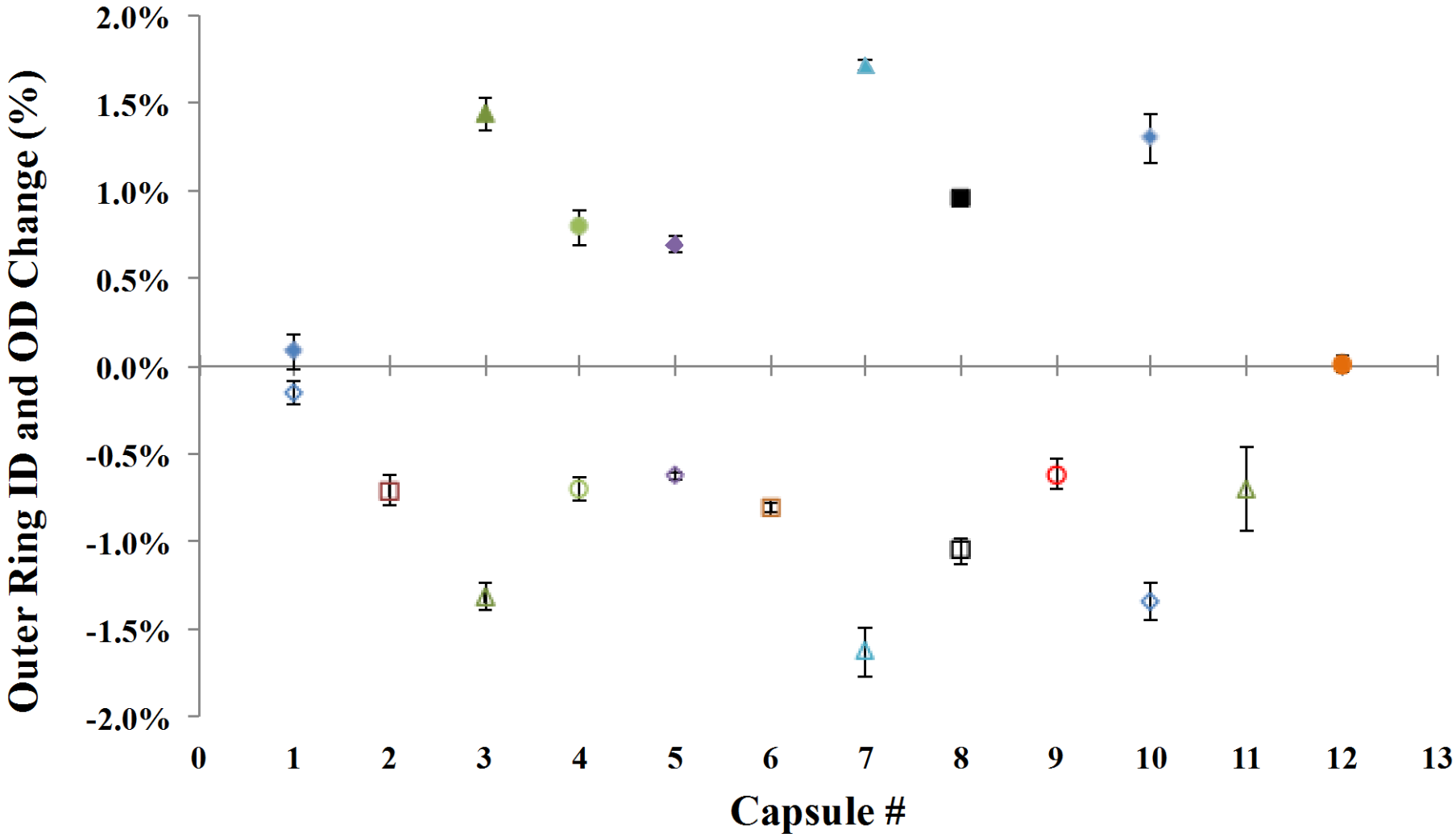

Results: Sink Ring ID and OD Change Relative to Fluence

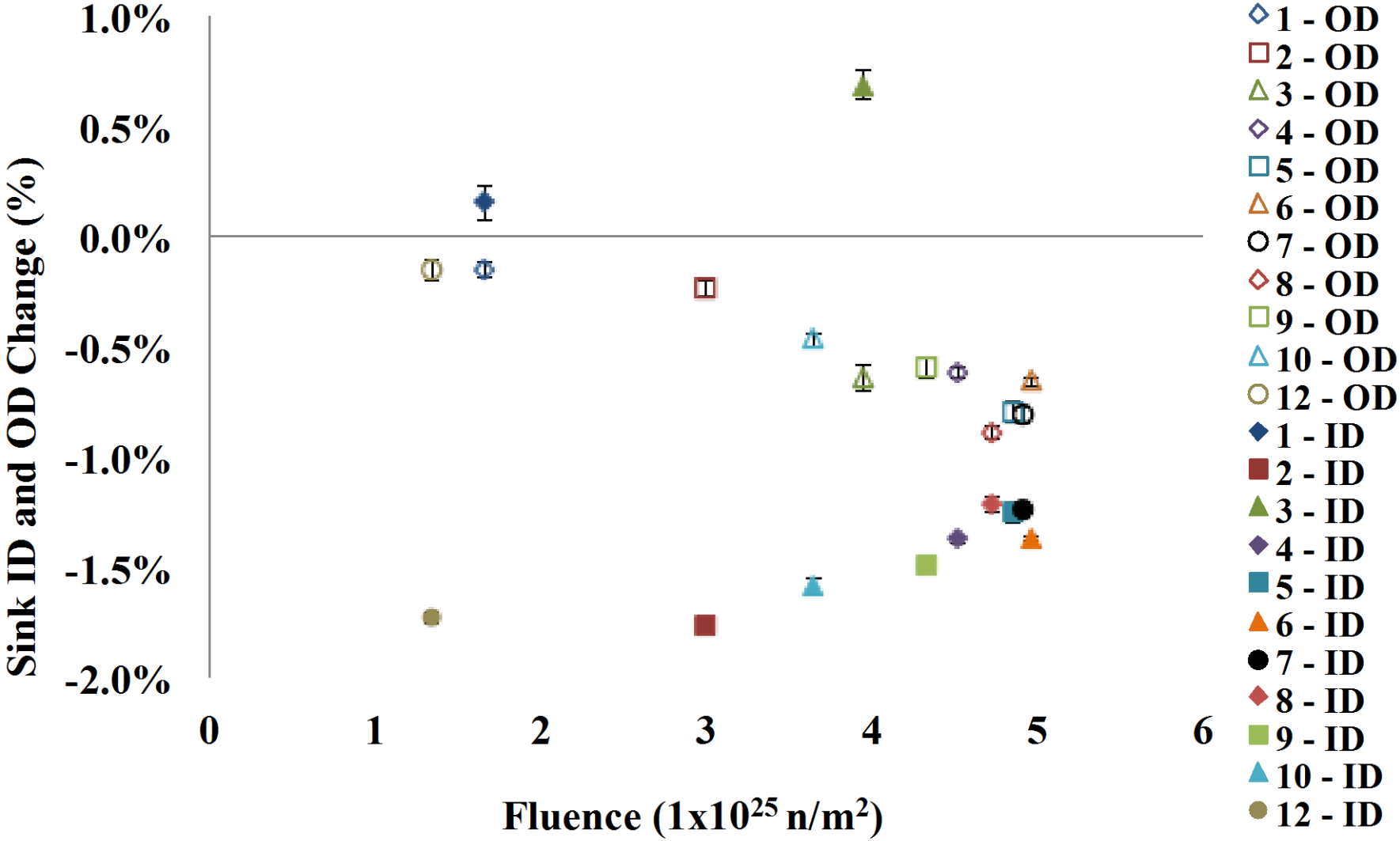

Results: Sink Ring ID and OD Change With Uncertainty Bars

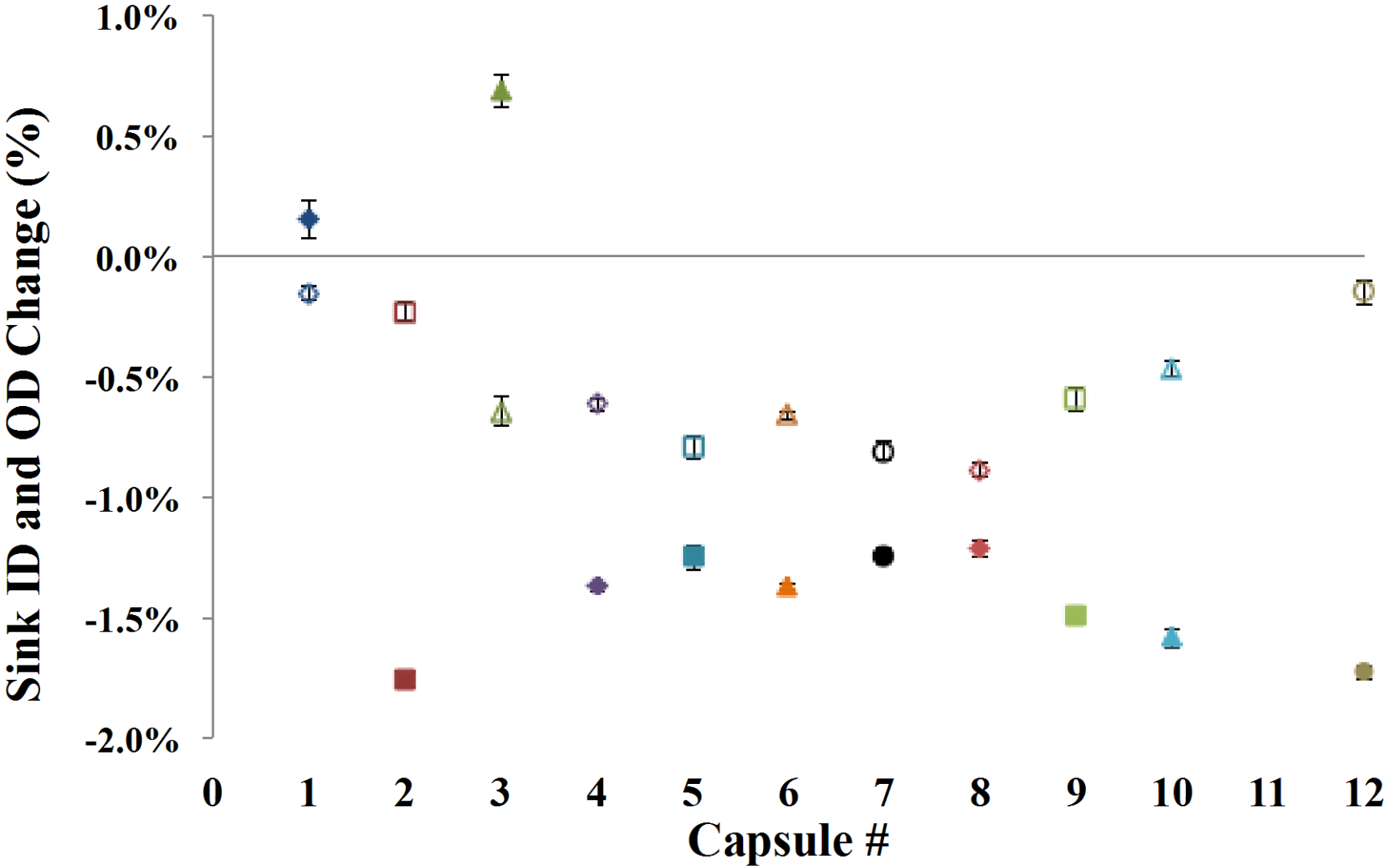

Conclusions

- The diameter of all compacts decreased by 0.5 to 2.0 %. Generally, the extent of compact diametric shrinkage increased with increasing neutron fluence.
- Compact lengths decreased with increasing fluence, reaching maximum shrinkage of about 0.9 % at a fast fluence of 4.0×10^{25} n/m^2. Above this fluence, the extent of length shrinkage appeared to turn around and decrease with fluence, and some compacts from Capsules 4, 5, and 7 increased in length after a fluence of 5.0×10^{25} n/m^2.
- The inner rings also exhibited a decrease in the ODs and an increase in the IDs with increasing fluence.
- The outer rings exhibited the same trend in diametric change as the inner rings in that the IDs increased and the ODs decreased

Conclusions Continued

- The sink rings exhibited shrinkage of both the IDs and ODs with the inner diameters shrinking more than the outer diameters with the extent of OD shrinkage increasing with fluence. Two exceptions were noted in Capsules 1 and 3 where the IDs increased while the ODs decreased.
- The thermal model used to calculate temperatures in the experiment assumed that all the IDs and ODs of the inner, outer, and sink rings would all decrease with fluence. Measurements shows ID swelling and OD shrinkage for the inner and outer rings. While the IDs and ODs of the sink rings decreased in most cases, the rapid shrinkage of the IDs was not expected.
- Results of metrology were fed back into thermal analysis to improve temperature calculations for the experiment

FY-17 Work Scope Plans

- No additional metrology for AGR-3/4 is planned for FY-17

Francine Rice

Francine.Rice@inl.gov

*emails preferred

Idaho National Laboratory

(208) 533-7881*